SYFDIN16I

FLANGED STAINLESS STEEL STRAINER PN16

Stainless steel Y strainer flanged PN16 for filtration of fluids in chemical and pharmaceutical industries, petrochemical industries,
hydraulic installation, compressed air.
Strainer with removable filter and bolted bonnet
Threaded BSP draining cap allowing to install a draining valve.
2 PTFE gaskets for the bonnet and the cap.
Compatible with explosive atmosphere, ATEX Zone 1&21 and Zone 2&22.
Strainer in accordance with the regulation (EC) N° 1935/2004.

ISO 9001:2008 BUREAU VERITAS Certification

CE 1935/2004

Marine & Offshore Division

Certificate 3.1

TÜVRheinland PED/2014/68/UE



Size :	DN15 to DN200
Connection :	Flanges RF PN10/16
Min Temperature :	-20°C
Max Temperature :	+200°C
Max Pressure :	16 Bars
Specifications :	Removable stainless steel filter Bolted bonnet with draining cap PTFE gaskets ATEX
Materials :	Stainless steel EN 1.4408

Date : 09/23

SPECIFICATIONS :

- Removable stainless steel filter
- PN16 Flanges R.F.
- Horizontal or vertical position with descendant fluid (respect the flow direction indicated by the arrow)
- Mesh 8/10° mm (800 µ) up to DN 50 , 10/10° mm from DN 65 to 80 and 30/10° over
- Bolted bonnet with draining cap threaded BSP

USE :

- For Chemical and pharmaceutical industries, petrochemical industries, hydraulic installation, compressed air
- Min Temperature Ts : - 20°C
- Max Temperature Ts :+ 200°C
- Max Pressure Ps : 16 bars (see graph)
- Steam : 10 bars maximum

PRESSURE / TEMPERATURE GRAPH (STEAM EXCLUDED) :

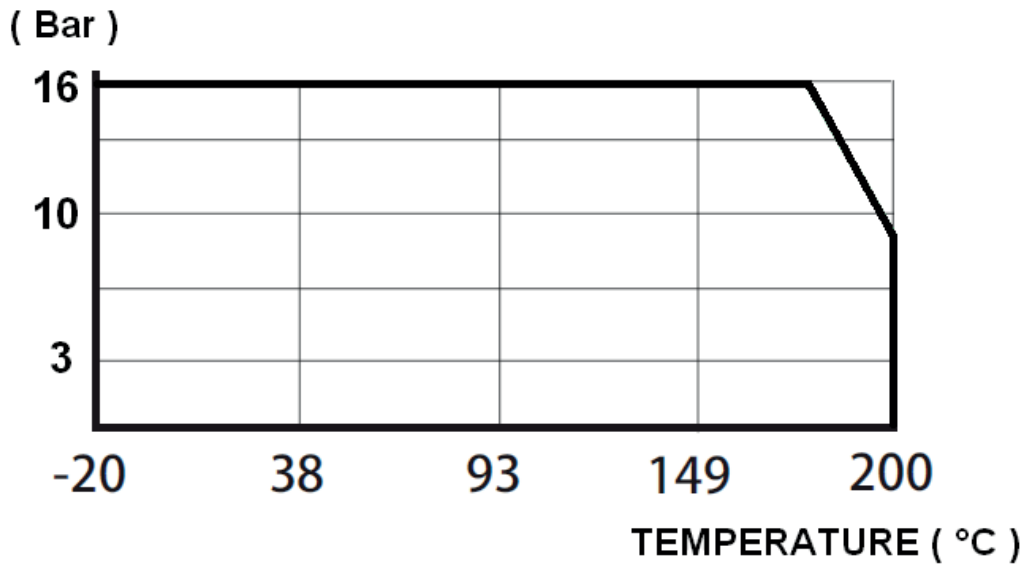

FLOW COEFFICIENT Kv (M3 / h) :

DN	15	20	25	32	40	50	65	80	100	125	150	200
Kv (m3/h)	2.59	6.05	12.1	17.3	27.7	56.2	85.5	138.4	259.5	415.1	605.4	882.3

BONNET BOLTING TIGHTENING TORQUES (in Nm) :

DN (mm)	15	20	25	32	40	50	65	80	100	125	150	200
Torques (Nm)	25			40	60						150	250

RANGE :

- PN10/16 Flanges R.F. from DN 15 to DN 150 and PN16 for DN200
- Screen alone with mesh 2.5/10° (250µ)

HEAD LOSS GRAPH :

DN 15 - 40

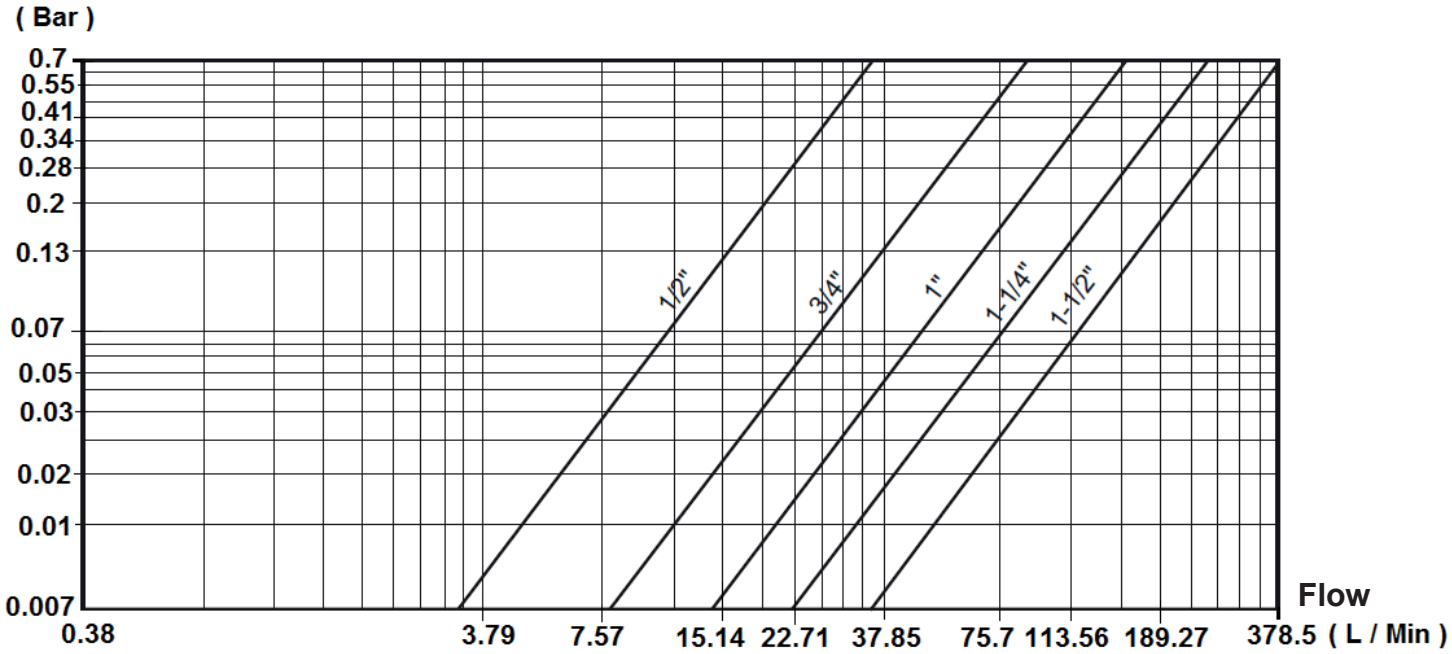

DN 50 - 200

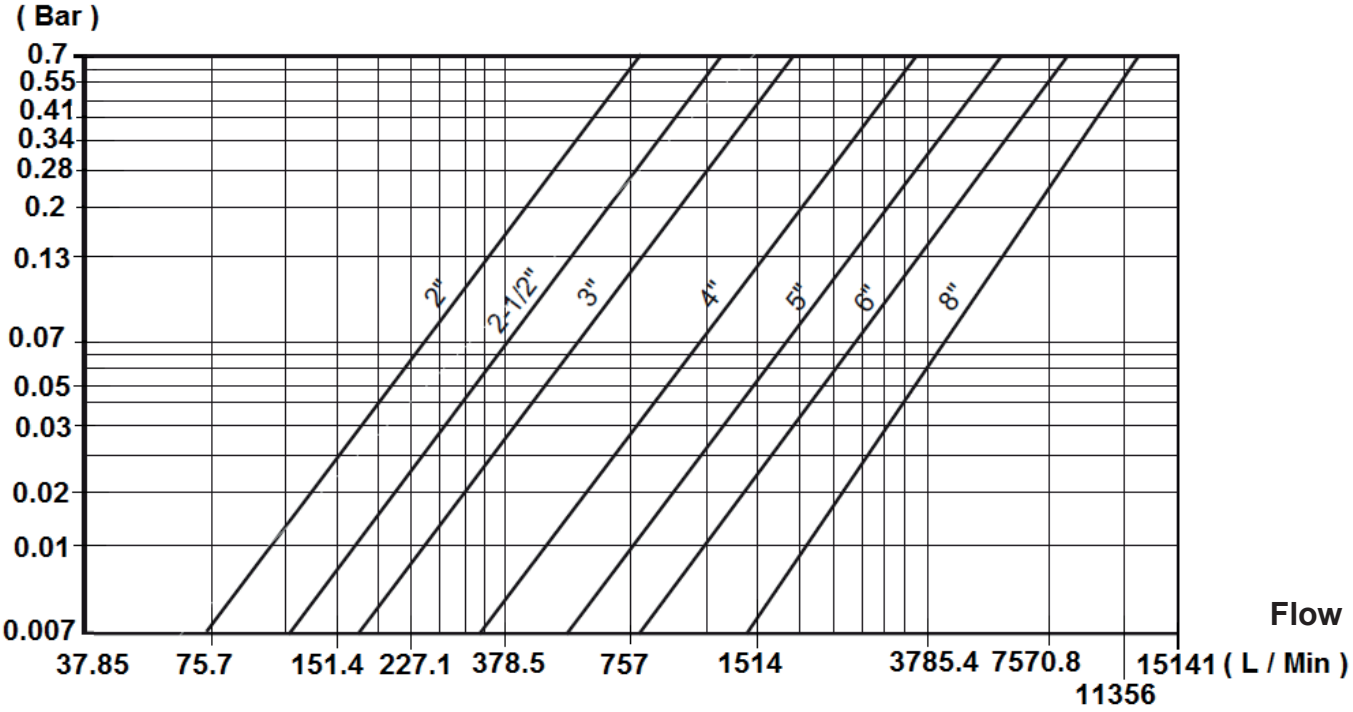

REPAIRABILITY :

SCREEN

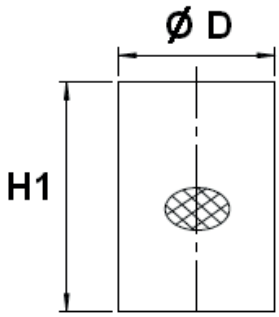

PTFE BONNET GASKET

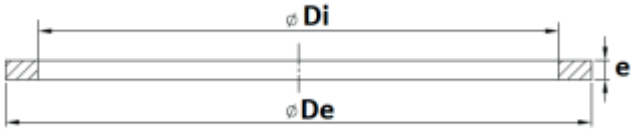

PTFE CAP GASKET

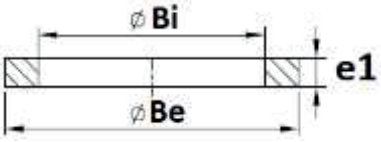

		DN	15	20	25	32	40	50
Screen	Size	Ø D x H1	18 x 57	23 x 55	29 x 88	40 x 82	43 x 100	54 x 103
	Standard filtration	Mesh	0.8					
		Ref.	**9804400**	**9804401**	**9804402**	**9804403**	**9804404**	**9804405**
	Fine Filtration	Mesh	**0.25**					
		Ref.	**9804900**	**9804901**	**9804902**	**9804903**	**9804904**	**9804905**
Gaskets kit	Cap gasket	Ø Bi x Ø Be x e1	21 x 25.5 x 3					
	Bonnet gasket	Ø Di x Ø De x e	29 x 36 x 2.5	34 x 43 x 2.5	39 x 48 x 2.5	50 x 59 x 3	54 x 63 x 3	64 x 72 x 3
	Ref.		**9804420**	**9804421**	**9804422**	**9804423**	**9804424**	**9804425**

		DN	65	80	100	125	150	200
Screen	Size	Ø D x H1	68 x 135	84 x 150	103 x 159	130 x 220	154 x 250	208 x 300
	Standard filtration	Mesh	1		3			
		Ref.	**9804406**	**9804407**	**9804408**	**9804409**	**9804410**	**9804411**
	Fine Filtration	Mesh	**0.25**					
		Ref.	**9804906**	**9804907**	**9804908**	**9804909**	**9804910**	**9804911**
Gaskets kit	Cap gasket	Ø Bi x Ø Be x e1	21 x 25.5 x 3		26.5 x 35 x 3			
	Bonnet gasket	Ø Di x Ø De x e	79 x 88 x 3	93 x 106 x 3	119x130x3	148x156x3	182x193x3.5	239x251x3.5
	Ref.		**9804426**	**9804427**	**9804428**	**9804429**	**9804430**	**9804431**

MATERIALS :

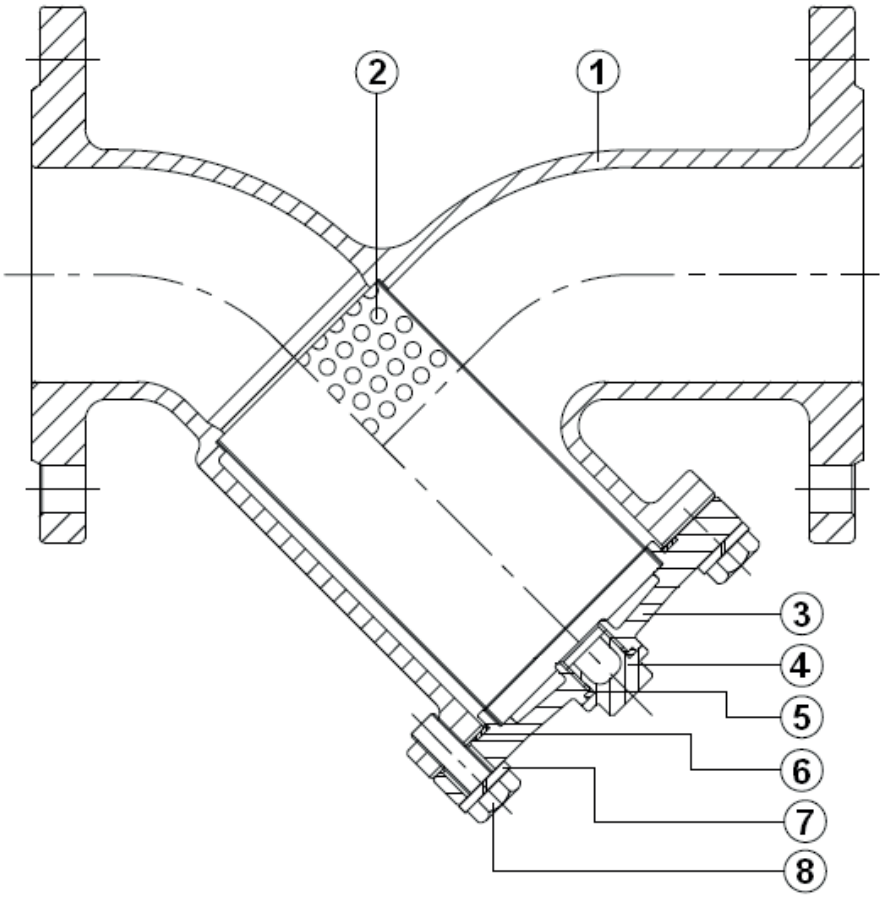

Item	Designation	Materials
1	Body	EN 1.4408
2	Filter	AISI 304
3	Bonnet	EN 1.4408
4	Draining cap	
5	Gasket	PTFE
6	Bonnet gasket	PTFE
7	Washer	AISI 304
8	Screw	

SIZE (in mm) :

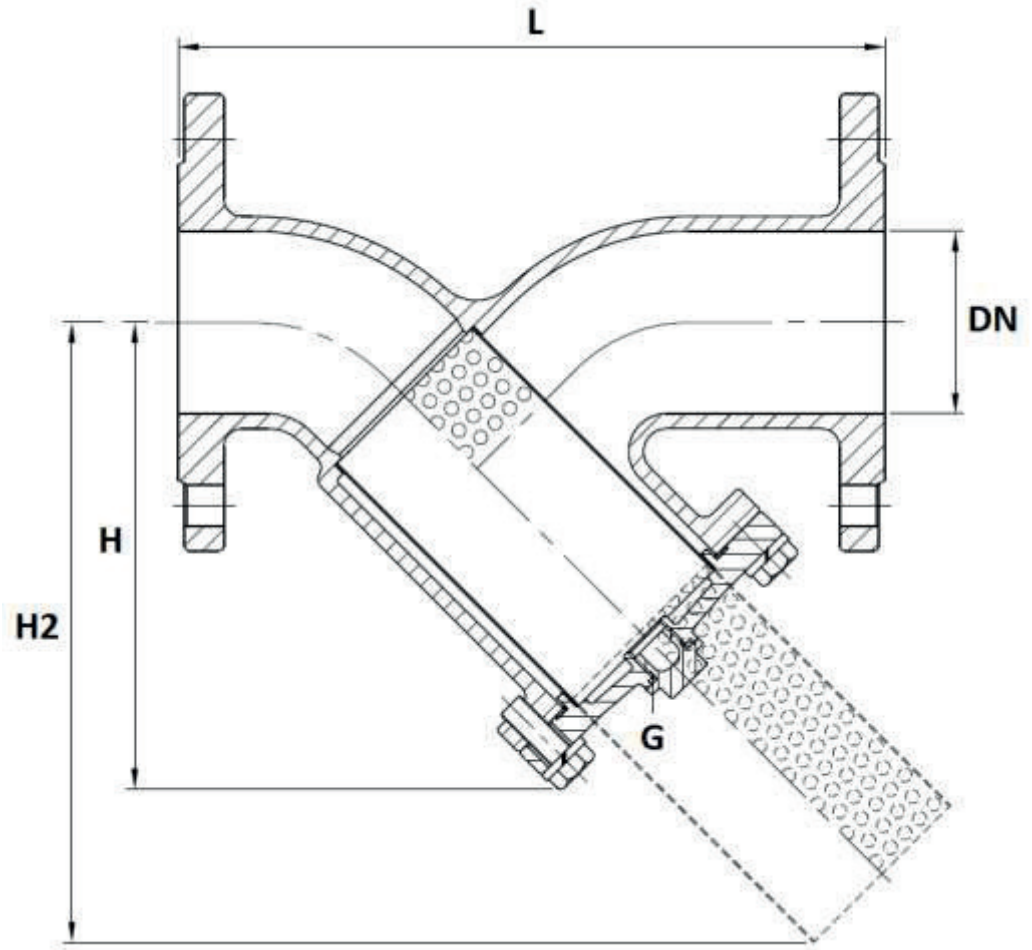

Filter size :

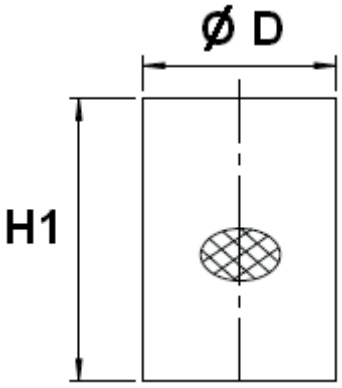

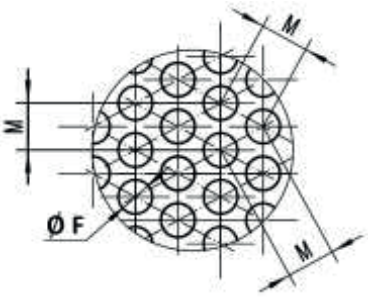

DN	15	20	25	32	40	50	65	80	100	125	150	200
L	130	150	160	180	200	230	290	310	350	400	480	600
H	85	85	112	114	132	150	185	200	232	274	328	410
H2 (mini)	104	99	149	144	171.5	192.5	250	272	306	396	456	574
G (drain)	1/2"								3/4"			
Ø D	18	23	29	40	43	54	68	84	103	130	154	208
H1	57	55	88	82	100	103	135	150	159	220	250	300
Mesh (Ø F)	0.8						1		3			
M	1.8						2		4			
Weight (Kg)	2	2.7	3.5	5	6.1	8.1	12.3	15.5	22	30	41	77.1
Ref.	240015	240020	240025	240032	240040	240050	240065	240080	240100	240125	240150	240200

PN16 FLANGES SIZE (in mm) :

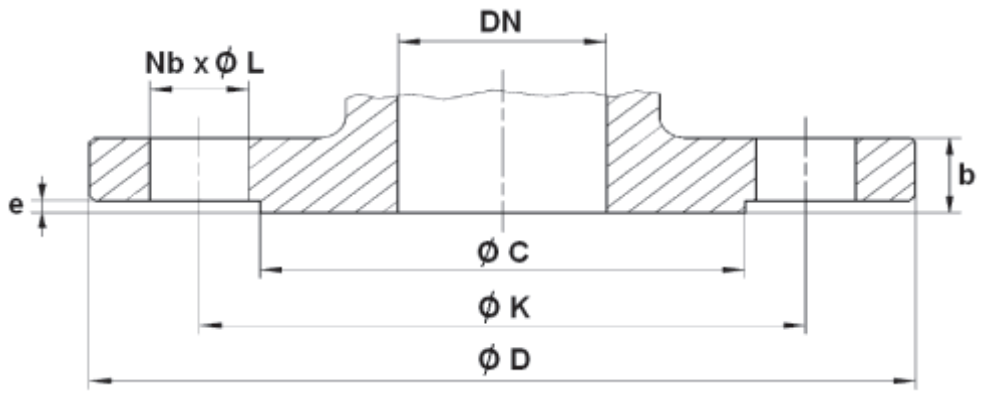

DN	15	20	25	32	40	50	65	80	100	125	150	200
Ø C	45	58	68	78	88	102	122	138	158	188	212	268
Ø D	95	105	115	140	150	165	185	200	220	250	285	340
Ø K	65	75	85	100	110	125	145	160	180	210	240	295
Nb x Ø L	4 x 14	4 x 14	4 x 14	4 x 18	4 x 18	4 x 18	4 x 18	8 x 18	8 x 18	8 x 18	8 x 22	12 x 22
b	14	16	16	16	16	18	18	20	20	22	22	24
e	2	2	2	2	3	3	3	3	3	3	3	3

STANDARDS :

- Manufacturer certified ISO 9001 : 2015
- DIRECTIVE 2014/68/EU : For liquids and gas of Group 1
    - DN15-25 : Article 4, §3 (SEP), no CE marking
    - DN32-50 : Risk Category I, marking CE 0035
    - DN65-200 : Risk Category II, marking CE 0035
- Certificate 3.1 on request
- Construction according to EN 12516-1
- Pressure tests according to API 598, table 6
- Length according to EN 558 series1 (DIN 3202-1 F1 – NF 29354)
- PN16 Flanges R.F. according to EN 1092-1
- ATEX Group II Category 2 G/2D Zone 1 & 21 Zone 2 &22 (**optional marking**)
- Strainer in accordance with the regulation **(EC) N° 1935-2004 on request**
- Foundry certified Bureau Veritas Marine & Offshore according to NR320 (BV Marine recognition Mode II)

INSTALLATION POSITIONS :

Vertical position (descendand fluid)



Horizontal position

