# Positioners

## SIPART PS2

### Overview




SIPART PS2 in polycarbonate enclosure with gauge block (optional)




SIPART PS2 in aluminum enclosure




SIPART PS2 in stainless steel enclosure with gauge block (optional)

### Overview (continued)




SIPART PS2 in flameproof aluminum enclosure (Ex d) with gauge block (optional)




SIPART PS2 in flameproof stainless steel enclosure 316L with gauge block (optional)

SIPART PS2 positioners control the valve position according to set-point value specification on pneumatic valves. The valve can be verified with various intelligent online (during operation) and off-line (e.g. between batch processes) diagnostic functions. Diagnostic functions can be optionally expanded by pressure sensors.

2023

## Benefits

SIPART PS2 positioners excel in their:

- Easy installation
- Automatic commissioning
- Simple operation and on-device configuration with local display or via SIMATIC PDM
- Very high control performance
- Minimal air consumption in stationary operation
- "Close tight" function for maximum torque on the process valve seat
- "Fast Open/Fast Close" function for defined approach of the end position with fast reaction to new setpoint specifications
- "Fail Safe" function: Secure depressurization SIL 2 in case of failure of electrical auxiliary power
- "Fail in place" function: Maintain current position on failure of electrical and/or pneumatic auxiliary power
- "Fail to Open" function: Pressurizing of the actuator in case of failure of electrical auxiliary power
- Numerous functions can be activated by simple configuring (e.g. characteristic curves and limits)
- One device variant for all applications: Linear actuators, part-turn actuators and cylinders
- Optional with internal or external contactless position feedback for external ambient conditions
- "Intelligent solenoid valve": Solenoid valve function and diagnostics in one device
- Extensive diagnostic functions:
  - Full Stroke Test
  - Multi Step Response Test
  - Valve Performance Test
  - Valve Signature, pressure sensor-aided
  - Partial Stroke Test, optionally pressure sensor-supported for performance and maintenance assessment of the valve
  - Leakage monitoring
- Can be operated with natural gas, carbon dioxide, nitrogen or noble gases

## Application

The SIPART PS2 is used in the following industry sectors:

- Valve manufacturing
- Chemical industry
- Petrochemical industry
- Oil and gas
- Paper
- Water and wastewater
- Power supply
- Pharmaceuticals
- Food and beverages

The devices are available in variants for:

- 4 to 20 mA
- HART communication
- PROFIBUS PA communication
- FOUNDATION Fieldbus communication
- Single-and double-acting valves in various enclosure designs and various materials (polycarbonate, aluminum and stainless steel)
- Applications without explosion protection requirements
- Hazardous applications in the versions:
  - Device protection with intrinsic safety (Ex i)
    for use in Zone 1, 2, 21, 22 or Class I, II, III/Division 1/Groups A-G
  - Device dust ignition protection by enclosure (Ex t)
    for use in Zone 21, 22 or Class II, III/Division 1/Groups E-G
  - Device protection with increased security (Ex e)
    for use in Zone 2 or Class I, Division 2, Groups A-D
  - Device protection with flameproof enclosure (Ex d)
    for use in Zone 1 or Class I, Division 1, Groups A-D

***Stainless steel enclosure for extreme ambient conditions***

The SIPART PS2 is available in a stainless steel enclosure for use in particularly aggressive environments (e.g. offshore operation, chlorine plants). The device functionality is not different due to the enclosure variants.

## Design

The SIPART PS2 digital positioner comprises the following components:

- Base plate with lid with/without inspection window, depending on the variant
- Electronics with screw-type terminals:
  - 4 to 20 mA
  - 4 to 20 mA with HART
  - PROFIBUS PA according to IEC 61158-2, bus-supplied
  - FOUNDATION Fieldbus (FF) according to IEC 61158-2, bus-supplied
- Position feedback via potentiometer or non-contacting sensor (NCS)
- Pneumatic block

The pneumatic connections for supply air and actuating pressure are located on the right side of the enclosure. A gauge block, venting gauge block, booster, VDI3847 interface or a safety solenoid valve can be connected there as options. The SIPART PS2 positioner is fitted to the linear or part-turn actuator using an appropriate mounting kit.

***Optional expansion with modules and functions***

Optionally, SIPART PS2 can be expanded with the following modules and functions:

Analog Output Module (AOM)

Analog position feedback 4 to 20 mA.

Digital I/O Module (DIO) with 3 digital outputs and 1 digital input

- Signaling of two limits of the travel or angle. The two limits can be assigned parameters independently as maximum or minimum values.
- Output of an alarm if the setpoint position of the final control element is not reached in automatic mode or if a device/valve fault occurs.
- 2nd digital input for alarm signals or for triggering safety reactions, e.g. hold position or approach safety position.

Inductive Limit Switches (ILS)

Via the inductive switches, 2 independent limits can be set and monitored as NAMUR signal (EN 60947-5-6). The module also contains an integrated fault indicator (see "Digital I/O Module (DIO)").

Mechanic Limit Switches (MLS)

2 independent limits can be monitored via the mechanical switches. The module also contains an integrated fault indicator (see "Digital I/O Module (DIO)").
Valid for all modules described above:

- All signals are electrically isolated from one another and from the basic unit. The outputs indicate self-signaling faults. The modules are easy to retrofit.

***Separate mounting of positioner and position detection***

Separate mounting of the positioner and position detection can be implemented with SIPART PS2. Only measurement of the stroke or angle, for example, is carried out directly on the actuator. This means that the positioner can be installed at a distance in a protected area. Components are connected electrically via a cable and pneumatically via tubes or pipes. The system is often advantageous if the ambient conditions at the valve exceed the specified values for the positioner (e.g. strong vibrations, radiation, magnetism).

## Design (continued)

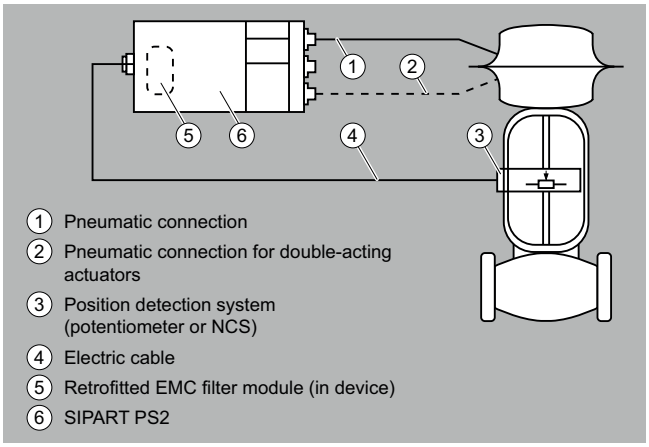


Separate installation of the position detection and positioner SIPART PS2

***Use for position detection***

The following can be used for position detection:



SIPART PS2, NCS for strokes > 14 mm

- Non-contacting sensor (NCS)
- Position Transmitter
- Linear potentiometers
- Commercial sensors

Non-contacting sensor (NCS)

For SIPART PS2

## Design (continued)

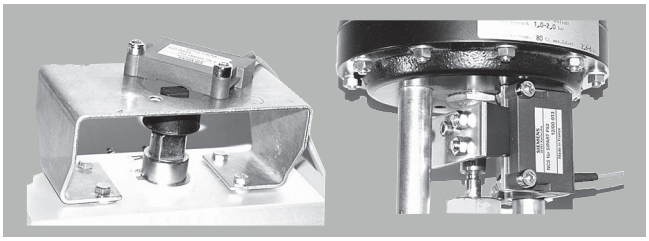

Left: NCS for part-turn actuator (6DR4004-.N.10) mounted on mounting console 6DR4004-1D to 4D
Right: NCS for linear actuator (6DR4004-.N.20) mounted with actuator-specific/customer-specific mounting solution

Position Transmitter

With potentiometer, with NCS, with NCS and ILS or with NCS and MLS for SIPART PS2.
Mounting takes place like with SIPART PS2.




Linear potentiometers

With 3K, 5K or 10 to 20 kΩ (e.g. pneumatic cylinder).

Commercial sensors

With 4 to 20 mA or 0 to 10 V (only with non-ex applications).

## Function

***Monitoring functions***

The SIPART PS2 has comprehensive monitoring functions with which changes on the actuator and process valve can be detected and signaled depending on the set limit. This information provides important indications on the status of the valve.
Determined/monitored measuring data:

- Travel integral
- Number of changes in direction
- Alarm counter
- Self-adjusting dead zone
- Process valve end position (e.g. for detection of process valve seat wear or deposits)
- Operating hours (also according to temperature and position ranges) as well as min./max. temperature
- Operating cycles of piezoelectric valves in pneumatic block
- Process valve travel time
- Actuator leakages

***At a glance with the Diagnostics Cockpit***

With the Diagnostics Cockpit, the HART variants of the SIPART PS2 provide a straightforward way of getting started with the world of diagnostic capabilities. All relevant information on the valve, such as setpoint, actual value, control deviation, status of the diagnostic system, etc., is available at a glance. Additional facts and details are just a few mouse clicks away from the Diagnostics Cockpit.

***Status monitoring with 3-stage alarm concept***

The intelligent electropneumatic SIPART PS2 positioner is equipped with additional monitoring functions. The status alarms derived from these monitoring functions signal active faults of the valve with grading in the form of traffic light signaling. The status alarms are symbolized by a wrench in the colors green, yellow and red (in SIMATIC PDM and Maintenance Station):

- Maintenance required (green wrench)
- Urgent maintenance demanded (yellow wrench)
- Imminent danger of valve failure or general failure (red wrench)

This allows users to put early measures into action before an acute process valve or actuator fault occurs which could result in a system shutdown. Early alarms indicate, for example, the onset of a diaphragm break in the actuator or progressive sluggishness of a valve. In this way, users can guarantee plant safety and availability with suitable maintenance strategies.
This 3-stage alarm hierarchy also allows early detection and signaling of static friction of a gland, wear of a process valve plug/seat, or deposits or coatings on the fittings.
These fault indications can be output either line-conducted over the alarm outputs of the positioner (maximum 3), or via communication over the HART or fieldbus interfaces. In this case, the HART, PROFIBUS and FOUNDATION Fieldbus variants of SIPART PS2 allow for differentiation of the various fault indications, as well as a trend representation and histogram function of all key process variables with regard to the valve.
The device's local display also displays the graded maintenance requirements, complete with identification of the source of the fault.

***Maintenance required of control valves***

The Full Stroke Test, Step Response Test, Multi Step Response Test and Valve Performance Test provide detailed information about the maintenance required of the valve. With the help of the HART communication system, you receive comprehensive test results and can identify the extent of the maintenance measures. In order to quantify the performance capability of valves, characteristic values such as step response times (T63, T86 or Txx), dead times, over-

## Function (continued)

shoot, hysteresis, measurement deviations and non-linearity are determined.

***Functional Safety according to SIL 2***

In the variants 6DR5.1.-0....-....-Z C20, the positioner is suitable for use on single-acting valves with spring return that satisfy the special requirements in terms of functional safety up to SIL 2 according to IEC 61508 or IEC 61511. The positioner depressurizes the process valve actuator on demand/in the event of a fault (safe depressurizing) and puts the process valve in the preset safety position.

***Valve Signature***

With pressure sensor-aided Valve Signature, the characteristic curve of the valve can be recorded, saved in the device (max. 10 characteristic curves) and displayed in PDM, for example. The reference characteristic curve is recorded at the beginning directly during initialization. Based on the exportable data, friction values, spring characteristics, hysteresis, breakout pressures can be determined. If the test is regularly repeated, characteristic curves can be compared with one another and changes over time can be displayed as the basis for a predictive maintenance approach.

***Partial Stroke Test***

With the pressure sensor-aided Partial Stroke Test, the function of safety (open/close) valves can be checked reliably during operation. Up to 10 characteristic curves and important parameters are saved in the device. They can be displayed in PDM, for example. Recording of the reference characteristic curve takes place during operation and in settled state. Based on the exportable data, friction values, spring characteristics, hysteresis, breakout pressures can be determined. If the test is regularly repeated, characteristic curves can be compared with one another and changes over time can be displayed as the basis for a predictive maintenance approach.

***Intelligent solenoid valve***

The SIPART PS2 can (parameterizable) take on the function of a solenoid valve for open/close valves and also offers intelligent diagnostics for valves with the pressure sensor-aided Partial Stroke Test, for example. For devices without explosion protection and only in connection with the pressure sensor-aided diagnostics, SIPART PS2 can also be operated with 24 V, i.e. without additional wiring. All other devices must be supplied with 4 to 20 mA. SIPART PS2 takes on the function as "Intelligent solenoid valve" with additional pressure sensor-aided diagnostics and handles multiple tasks in one device:

- The positioner opens and closes the valve quickly and without control.
- In a safety scenario, during power failure, the SIPART PS2 drives the valve into the safety position "Functional Safety according to SIL 2".
- A pressure sensor-aided Partial Stroke Test can be performed automatically at regular intervals. This test keeps the valve in regular movement and prevents rusting of the valve due to corrosion or incrustation.

Solenoid valves on control valves normally cannot be tested during operation. They are therefore not necessary when using SIPART PS2 as the depressurizing is carried out on demand by SIPART PS2. This means that, on control valves, both the control function and the shut-off function can be carried out by a single device.

***Configuring***

The SIPART PS2 positioner contains the following configurations:

- Input current range 4 to 20 mA
- Rising or falling characteristic curve at the setpoint input
- Positioning speed limit (setpoint ramp)
- Split-range mode: Adjustable start-of-scale and full-scale values
- Response threshold (deadband); self-adjusting or fixed

## Function (continued)

- Direction of action: Rising or falling output pressure with rising setpoint
- Limits of position range, start-of-scale/full-scale value
- Limits (alarms) of the process valve position: Minimum and maximum value
- Automatic tight closing stroke adjustment in accordance with the valve process characteristic curve
- Function of the digital inputs
- Function of alarm output, etc.

## Selection and ordering data

| SIPART PS2 electropneumatic positioner | Article No. 6DR5 | | | | | | | | | | | | | | | | Order code | | | |
|---|---|---|---|---|---|---|---|---|---|---|---|---|---|---|---|---|---|---|---|---|
| | ● | ● | ● | - | 0 | ● | ● | ● | ● | - | 0 | ● | ● | ● | | | ● | ● | ● |
|  Click the article number for online configuration in the PIA Life Cycle Portal. | | | | | | | | | | | | | | | | | | | | |
| **Version** | | | | | | | | | | | | | | | | | | | | |
| 4 ... 20 mA | 0 | | | | | | | | | | | | | | | | | | | |
| 4 ... 20 mA, HART | 1 | | | | | ***N*** ¹⁾ | | | | | | | | | | | | | | |
| 4 ... 20 mA (3-/4-wire) | 1 | | | | | ***N*** ¹⁾ | | | | | | | | | | | | | | |
| PROFIBUS PA | 5 | | | | | | | | | | | | | | | | | | | |
| FOUNDATION Fieldbus | 6 | | | | | | | | | | | | | | | | | | | |
| Without electronics (for 19-inch remote variant) | 9 | | | | | | | | | | | | | | | | | | | |
| **Actuator** | | | | | | | | | | | | | | | | | | | | |
| Single-acting | | 1 | | | | | | | | | | | | | | | | | | |
| Double-acting | | 2 | | | | | | | | | | | | | | | | | | |
| **Enclosure** | | | | | | | | | | | | | | | | | | | | |
| Polycarbonate, glass-fiber reinforced²⁾ | | | 0 | | | | | | | | | | | | | | | | | |
| Stainless steel, without inspection window, 1.4581 | | | 2 | | | | | | | | | | | | | | | | | |
| Aluminum, AlSi12 | | | 3 | | | | | | | | | | | | | | | | | |
| **Type of protection (Ex)** | | | | | | | | | | | | | | | | | | | | |
| Without explosion protection | | | | | | N | | | | | | | | | | | | | | |
| Increased safety (Ex e)³⁾, dust ignition protection by enclosure (Ex t)³⁾ | | | | | | D | | | | | | | | | | | | | | |
| Intrinsic safety (Ex i)<br>SITRANS I200 output isolation amplifier sold separately (7NG4131-1AA00) | | | | | | E | | | | | | | | | | | | | | |
| Intrinsic safety (Ex i), increased safety (Ex e)³⁾<br>SITRANS I200 output isolation amplifier sold separately (7NG4131-1AA00) | | | | | | F | | | | | | | | | | | | | | |
| Increased safety (Ex e)³⁾ | | | | | | G | | | | | | | | | | | | | | |
| Intrinsic safety (Ex i), increased safety (Ex e)³⁾, dust ignition protection by enclosure (Ex t)³⁾<br>SITRANS I200 output isolation amplifier sold separately (7NG4131-1AA00) | | | | | | K | | | | | | | | | | | | | | |
| **Connection thread electric/pneumatic** | | | | | | | | | | | | | | | | | | | | |
| M20×1.5 / G¼ | | | | | | | G | | | | | | | | | | | | | |
| ½-14 NPT / ¼-18 NPT | | | | | | | N | | | | | | | | | | | | | |
| M20×1.5 / ¼-18 NPT | | | | | | | M | | | | | | | | | | | | | |
| ½-14 NPT / G¼ | | | | | | | P | | | | | | | | | | | | | |
| M12 device plug (A coding) for electronics⁴⁾ / G¼<br>The M12 cable socket can be ordered separately with 6DR4004-5A. | | | | | | | R | | | | | | | | | | | | | |
| M12 device plug (A coding) for electronics⁴⁾ / ¼-18 NPT<br>The M12 cable socket can be ordered separately with 6DR4004-5A. | | | | | | | S | | | | | | | | | | | | | |
| **Limit monitor**<br>Including 2nd cable gland | | | | | | | | | | | | | | | | | | | | |
| None | | | | | | | | 0 | | | | | | | | | | | | |
| Digital I/O Module (DIO), 1 digital input, 3 digital outputs (2 limits min. or max., 1 fault indicator).<br>Device plug M12 optionally orderable with -Z D55. | | | | | | | | 1 | | | | | | | | | | | | |
| Inductive Limit Switches (ILS), 2 inductive limit switches and 1 digital output (DQ)<br>Device plug M12 optionally orderable with -Z D56. | | | | | | | | 2 | | | | | | | | | | | | |
| Mechanic Limit Switches (MLS), 2 mechanical limit switches and 1 digital output (DQ). Not applicable for natural gas applications.<br>Device plug M12 optionally orderable with -Z D57. | | | | | | | | 3 | | | | | | | | | | | | |
| Internal NCS module for non-contacting position detection. The internal position detection via a potentiometer is not applied but can be ordered in addition with -Z K11. | | | | | | | | 9 | | | | | | | | | L | 1 | A | |
| **Option modules**<br>Including 2nd cable gland | | | | | | | | | | | | | | | | | | | | |
| None | | | | | | | | | 0 | | | | | | | | | | | |
| Analog Output Module (AOM), analog position feedback 4 ... 20 mA.<br>Device plug M12 optionally orderable with -Z D53. SITRANS I100 isolating power supply sold separately (7NG4124-1AA00) | | | | | | | | | 1 | | | | | | | | | | | |

## Selection and ordering data (continued)

| SIPART PS2 electropneumatic positioner | Article No. 6DR5 ● ● ● - 0 ● ● ● ● - 0 ● ● ● | Order code ● ● ● |
|---|---|---|
| Analog Input Module (AIM) to connect external position detection systems, e. g. NCS Sensor, Position Transmitter 6DR4004-1ES/2ES/3ES/4ES or other sensors. The internal position detection is not applied but can be ordered in addition with -Z K11.<br>Device plug M12 optionally orderable with -Z D54. SITRANS I100 isolating power supply sold separately (7NG4124-1AA00) | 2 | |
| Analog Output Module (AOM) and Analog Input Module (AIM). The internal position detection via a potentiometer is not applied but can be ordered in addition with -Z K11. Device plug M12 is not available. | 3 | |
| **Brief instructions** | | |
| English/German/Chinese | A | |
| French/Italian/Spanish | B | |
| **Version** | | |
| Standard / Fail-safe<br>• Depressurizing the actuator in case of failure of electrical auxiliary power | A | |
| Fail in Place<br>• Maintain position in case of failure of electrical and/or pneumatical auxiliary power | F | |
| Fail to Open<br>• Pressurizing of the actuator in case of failure of electrical auxiliary power | G | |
| **Gauge block** | | |
| None | 0 | |
| With pressure gauges made of plastic IP31 (MPa, bar) | | |
| • Block made of aluminum, single-acting, G¼ | 1 | |
| • Block made of aluminum, double-acting, G¼ | 2 | |
| With pressure gauges made of plastic IP31 (MPa / psi) | | |
| • Block made of aluminum, single-acting, ¼-18 NPT | 3 | |
| • Block made of aluminum, double-acting, ¼-18 NPT | 4 | |
| With pressure gauges made of metal IP44 (MPa, bar, psi) | | |
| • Block made of aluminum, single-acting, G¼ | 9 | R 1 A |
| • Block made of aluminum, double-acting, G¼ | 9 | R 2 A |
| • Block made of aluminum, single-acting, ¼-18 NPT | 9 | R 1 B |
| • Block made of aluminum, double-acting, ¼-18 NPT | 9 | R 2 B |
| With pressure gauges made of stainless steel IP54 (MPa, bar, psi) | | |
| • Block made of stainless steel 316, single-acting, G¼ | 9 | R 1 C |
| • Block made of stainless steel 316, double-acting, G¼ | 9 | R 2 C |
| • Block made of stainless steel 316, single-acting, ¼-18 NPT | 9 | R 1 D |
| • Block made of stainless steel 316, double-acting, ¼-18 NPT | 9 | R 2 D |
| **** Can be ordered on request*** | * | * * * |
| Pressure gauge block 316 with gauge IP65, 316L (MPa, bar, psi) | | |
| **Venting gauge block** | | |
| Depressurizing of Y2 on compressed air failure with pressure gauges made of metal IP44 (MPa, bar, psi). The double-acting actuator with springs moves into the safety position. | | |
| • Block made of aluminum, double-acting, G¼ | 9 | R 2 E |
| • Block made of aluminum, double-acting, ¼-18 NPT | 9 | R 2 F |
| **Booster (Cv = 2)** | | |
| Aluminum with gauges made of metal IP44 (MPa, bar, psi) | | |
| • Single-acting, G½ | 9 | R 1 J |
| • Double-acting, G½ | 9 | R 2 J |
| • Single-acting, ½-14 NPT | 9 | R 1 K |
| • Double-acting, ½-14 NPT | 9 | R 2 K |

1) Explosion protection Ex i only available in connection with order option -Z P01/P02
2) Only for type of protection Ex i
3) Impact energy on inspection window max. 2 joule for aluminum enclosure 6DR5..3.
4) Device plug M12 mounted and electrically connected in versions 6DR50.., 6DR51.., 6DR55.. and 6DR56..

## Selection and ordering data (continued)

| Options<br>Add "-Z" to article number, specify order code and plain text | Order code |
|---|---|
| **Stainless steel sound absorber**<br>Standard with stainless steel enclosures | **A40** |
| **Functional safety (SIL 2) for 6DR5.1. only (single-acting positioner)**<br>Device suitable for use according to IEC 61508 and IEC 61511 | **C20** |
| **M12 device plug (D coding)**<br>The M12 cable socket can be ordered separately with 6DR4004-5D. | |
| Connected with Analog Output Module (AOM) | **D53** |
| Connected with Analog Input Module (AIM) | **D54** |
| Connected with Digital I/O Module (DIO) | **D55** |
| Connected with Inductive Limit Switches (ILS) | **D56** |
| Connected with Mechanic Limit Switches (MLS) | **D57** |
| **Optimized control behavior for small actuators (< 200 cm³)** | **K10** |
| **Additional internal position detection by means of a potentiometer** | **K11** |
| **Pneumatic terminal strip made of stainless steel 316** | **K18** |
| **Interface according to VDI/VDE 3847**<br>For single and double-acting, with CATS (Clean Air To Spring) only for single-acting. Not for flameproof enclosure. | **K20** |
| **Operation with natural gas**<br>Device is optimized for natural gas operation and contains corrosion-protected, painted electronics and high-quality FVMQ elastomers. Exhaust air (natural gas) cannot be dissipated collectively. | **K50** |
| **Permissible ambient temperature during operation -40 ... 80 °C (-40 ... +176 °F)**<br>For 6DR5..1., 6DR5..2., 6DR5..3.: Lid without inspection window | **M40** |
| **Pressure sensor supported monitoring / diagnostics** | |
| Monitoring of the device/custom min./max. supply pressure PZ.<br>Hold position on demand. Messages according to NAMUR NE107. | **P01** |
| Monitoring of the device/custom min./max. supply pressure PZ.<br>Hold position on demand.<br>Valve Signature, Partial Stroke Test, monitoring of leakage and actuating pressure (triggered), actuating pressure limitation for single-acting actuators. Messages according to NAMUR NE107. | **P02** |
| **Certificates** | |
| EN 10204 certificate type 2.1 | **C35** |
| DNV (Det Norske Veritas) | **S10** |
| LR (Lloyds Register) | **S11** |
| BV (Bureau Veritas) | **S12** |
| ABS (American Bureau of Shipping) | **S14** |
| KR (Korean Register of Shipping) | **S15** |
| CCS (China Classification Society) | **S16** |
| RINA (Registro Italiano Navale) | **S17** |
| **TAG plate made of stainless steel, 3-line**<br>Text line 1: plain text from Y17<br>Text line 2: plain text from Y15<br>Text line 3: plain text from Y16 | **A20** |
| **Measuring point description**<br>Input field: Max. 16 characters for HART, max. 32 characters for PROFIBUS PA, FOUNDATION Fieldbus and 4 ... 20 mA; specify in plain text | **Y15** |

## Selection and ordering data (continued)

| Options<br>Add "-Z" to article number, specify order code and plain text | Order code |
|---|---|
| **Measuring point text**<br>Input field: Max. 24 characters for HART, max. 32 characters for PROFIBUS PA, FOUNDATION Fieldbus and 4 ... 20 mA; specify in plain text | **Y16** |
| **Measuring point number (TAG no.)**<br>Input field: Max. 32 characters; specify in plain text | **Y17** |
| **Preset bus address**<br>Input field: Specify in plain text (for 6DR55.. and 6DR56.. only) | **Y25** |
| **Customer-specific parameter setting**<br>Input field: Specify in plain text | **Y30** |
| **Special design / Product Variant Request (PVR)**<br>Input field: Specify order number from PVR clarification in plain text | **Y99** |
| Examples: | |
| • Conformal coating / Tropicalization | **VP001** |
| • Gauge block with IP65 gauge | **VP002** |
| • SIPART PS2 for part-turn applications up to 180° | **VP003** |
| Creation of a "Product Variant Request" is a prerequisite | |

***Nameplate on SIPART PS2, tag plate made of stainless steel***

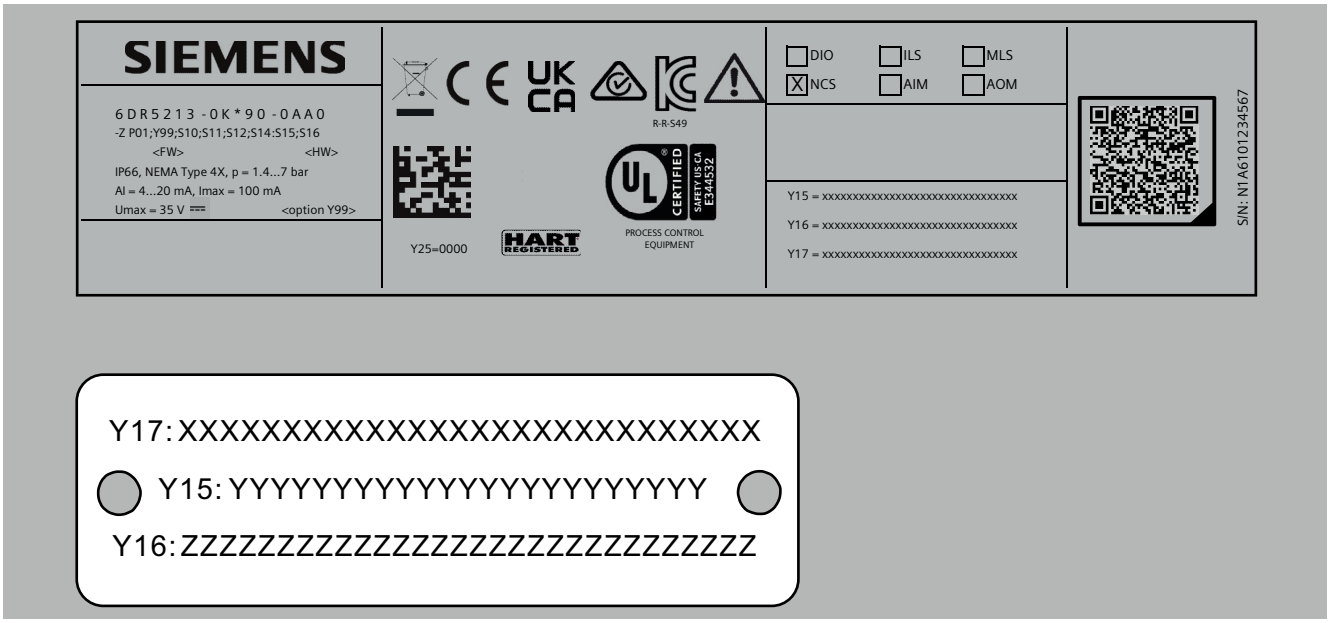

## Selection and ordering data (continued)

| SIPART PS2 electropneumatic positioner, in flameproof enclosure | Article No. 6DR5 ● ● ● - 0 ● ● ● ● - 0 ● ● ● ● ● ● ● | Order code |
|---|---|---|
|   Click the article number for online configuration in the PIA Life Cycle Portal. | | |
| **Version** | | |
| 4 ... 20 mA | 0 | |
| 4 ... 20 mA, HART | 1 | |
| PROFIBUS PA | 5 | |
| FOUNDATION Fieldbus | 6 | |
| **Actuator** | | |
| Single-acting | 1 | |
| Double-acting | 2 | |
| **Enclosure** | | |
| Aluminum, flameproof, AlSi12 | 5 | |
| Stainless steel, 316L, flameproof, 1.4409 | 6 | |
| **Type of protection (Ex)** | | |
| Without explosion protection | N | |
| Flameproof enclosure (Ex d), Dust ignition protection by enclosure (Ex t) | E | |
| Intrinsic safety (Ex i), increased safety (Ex e)<br>SITRANS I200 output isolation amplifier sold separately (7NG4131-1AA00) | F | |
| Increased safety (Ex e) | G | |
| Intrinsic safety (Ex i), increased safety (Ex e), dust ignition protection by enclosure (Ex t)<br>SITRANS I200 output isolation amplifier sold separately (7NG4131-1AA00) | K | |
| Flameproof enclosure (Ex d), dust ignition protection by enclosure (Ex t), Intrinsic safety (Ex i)<br>SITRANS I200 output isolation amplifier sold separately (7NG4131-1AA00) | P | |
| **Connection thread electrical/pneumatic** | | |
| M20×1.5 / G¼ | G | |
| ½-14 NPT / ¼-18 NPT | N | |
| M20×1.5 / ¼-18 NPT | M | |
| ½-14 NPT / G¼ | P | |
| M25×1.5 / G¼ | Q | |
| **Limit monitor** | | |
| None | 0 | |
| Digital I/O Module (DIO), 1 digital input, 3 digital outputs (2 limits min. or max., 1 fault indicator). | 1 | |
| Inductive Limit Switches (ILS), 2 inductive limit switches and 1 digital output (DQ). | 2 | |
| Mechanic Limit Switches (MLS), 2 mechanical limit switches and 1 digital output (DQ). Not applicable for natural gas applications. | 3 | |
| Internal NCS module for non-contacting position detection. The internal position detection via a potentiometer is not applied but can be ordered in addition with -Z K11. | 9 | L 1 A |
| **Option modules** | | |
| None | 0 | |
| Analog Output Module (AOM), 4 ... 20 mA current module<br>SITRANS I100 isolating power supply sold separately (7NG4124-1AA00) | 1 | |

## Selection and ordering data (continued)

| SIPART PS2 electropneumatic positioner, in flameproof enclosure | Article No. 6DR5 ● ● ● - 0 ● ● ● ● - 0 ● ● ● | Order code ● ● ● |
|---|---|---|
| Analog Input Module (AIM) to connect external position detection systems, e. g. NCS Sensor, Position Transmitter 6DR4004-1ES/2ES/3ES/4ES or other sensors. The internal position detection is not applied but can be ordered in addition with -Z K11. | 2 | |
| Analog Output Module (AOM) and Analog Input Module (AIM). The internal position detection via a potentiometer is not applied but can be ordered in addition with -Z K11. SITRANS I100 isolating power supply sold separately (7NG4124-1AA00) | 3 | |
| **Brief instructions** | | |
| English/German/Chinese | A | |
| French/Italian/Spanish | B | |
| **Version** | | |
| Standard / Fail-safe<br>• Depressurizing the actuator in case of failure of electrical auxiliary power | A | |
| Fail in Place<br>• Maintain position in case of failure of electrical and/or pneumatical auxiliary power | F | |
| Fail to Open<br>• Pressurizing of the actuator in case of failure of electrical auxiliary power | G | |
| **Gauge block** | | |
| None | 0 | |
| With pressure gauges made of plastic IP31 (MPa, bar) | | |
| • Block made of aluminum, single-acting, G¼ | 1 | |
| • Block made of aluminum, double-acting, G¼ | 2 | |
| With pressure gauges made of plastic IP31 (MPa / psi) | | |
| • Block made of aluminum, single-acting, ¼-18 NPT | 3 | |
| • Block made of aluminum, double-acting, ¼-18 NPT | 4 | |
| With pressure gauges made of metal IP44 (MPa, bar, psi) | | |
| • Block made of aluminum, single-acting, G¼ | 9 | R 1 A |
| • Block made of aluminum, double-acting, G¼ | 9 | R 2 A |
| • Block made of aluminum, single-acting, ¼-18 NPT | 9 | R 1 B |
| • Block made of aluminum, double-acting, ¼-18 NPT | 9 | R 2 B |
| With pressure gauges made of stainless steel IP54 (MPa, bar, psi) | | |
| • Block made of stainless steel 316, single-acting, G¼ | 9 | R 1 C |
| • Block made of stainless steel 316, double-acting, G¼ | 9 | R 2 C |
| • Block made of stainless steel 316, single-acting, ¼-18 NPT | 9 | R 1 D |
| • Block made of stainless steel 316, double-acting, ¼-18 NPT | 9 | R 2 D |
| **** Can be ordered on request*** | * | * * * |
| Pressure gauge block 316 with gauge IP65, 316L (MPa, bar, psi) | | |
| **Venting gauge block** | | |
| Depressurizing of Y2 on compressed air failure with pressure gauges made of metal IP44 (MPa, bar, psi). The double-acting actuator with springs moves into the safety position. | | |
| • Block made of aluminum, double-acting, G¼ | 9 | R 2 E |
| • Block made of aluminum, double-acting, ¼-18 NPT | 9 | R 2 F |
| **Booster (Cv = 2)** | | |
| Aluminum with gauges made of metal IP44 (MPa, bar, psi) | | |
| • Single-acting, G½ | 9 | R 1 P |
| • Double-acting, G½ | 9 | R 2 P |
| • Single-acting, ½-14 NPT | 9 | R 1 Q |
| • Double-acting, ½-14 NPT | 9 | R 2 Q |

## Selection and ordering data (continued)

| Options<br>Add "-Z" to article number, specify order code and plain text | Order code |
|---|---|
| **Functional safety (SIL 2) only for 6DR5.1* (single-acting positioner)**<br>Device suitable for use according to IEC 61508 and IEC 61511. | **C20** |
| **Optimized control behavior for small actuators (< 200 cm³)** | **K10** |
| **Additional internal position detection by means of a potentiometer** | **K11** |
| **Pneumatic terminal strip made of stainless steel 316** | **K18** |
| **Operation with natural gas**<br>Device is optimized for natural gas operation and contains corrosion-protected, painted electronics and high-quality FVMQ elastomers. Exhaust air (natural gas) can be dissipated collectively with the 6DR5..5*. | **K50** |
| **Permissible ambient temperature during operation -40 ... 80 °C (-40 ... +176 °F)**<br>For 6DR5..1*, 6DR5..2*, 6DR5..3*: Lid without inspection window | **M40** |
| **Pressure sensor supported monitoring/diagnostics** | |
| Monitoring of the device/custom min./max. supply pressure PZ.<br>Hold position on demand. Messages according to NAMUR NE107. | **P01** |
| Monitoring of the device/custom min./max. supply pressure PZ.<br>Hold position on demand.<br>Valve Signature, Partial Stroke Test, monitoring of leakage and actuating pressure (triggered), actuating pressure limitation for single-acting actuators. Messages according to NAMUR NE107. | **P02** |
| **Certificates** | |
| Explosion protection (Japan) | **E29** |
| EN 10204 certificate type 2.1 | **C35** |
| DNV (Det Norske Veritas) | **S10** |
| LR (Lloyds Register) | **S11** |
| BV (Bureau Veritas) | **S12** |
| ABS (American Bureau of Shipping) | **S14** |
| KR (Korean Register of Shipping) | **S15** |
| CCS (China Classification Society) | **S16** |
| RINA (Registro Italiano Navale) | **S17** |
| **TAG plate made of stainless steel, 3-line**<br>Text line 1: plain text from Y17<br>Text line 2: plain text from Y15<br>Text line 3: plain text from Y16 | **A20** |
| **Measuring point description**<br>Input field: Max. 16 characters for HART, max. 32 characters for PROFIBUS PA, FOUNDATION Fieldbus and 4 ... 20 mA; specify in plain text | **Y15** |
| **Measuring point text**<br>Input field: Max. 24 characters for HART, max. 32 characters for PROFIBUS PA, FOUNDATION Fieldbus and 4 ... 20 mA; specify in plain text | **Y16** |
| **Measuring point number (TAG no.)**<br>Input field: Max. 32 characters; specify in plain text | **Y17** |
| **Preset bus address**<br>Input field: Specify in plain text (for 6DR55.. and 6DR56.. only) | **Y25** |
| **Customer-specific parameter setting**<br>Input field: Specify in plain text | **Y30** |

## Selection and ordering data (continued)

| Options<br>Add "-Z" to article number, specify order code and plain text | Order code |
|---|---|
| **Special design / Product Variant Request (PVR)**<br>Input field: Specify order number from PVR clarification in plain text | **Y99** |
| Examples: | |
| • Conformal coating / Tropicalization | **VP001** |
| • Gauge block with IP65 gauge | **VP002** |
| • SIPART PS2 for part-turn applications up to 180° | **VP003** |
| Creation of a "Product Variant Request" is a prerequisite. | |

***Accessories***

Sensors and modules for remote variants

***NCS sensor***

| NCS sensor<br>For contact-free position detection (not for Ex d version) | Article No.<br>6DR4004- | ● | N | ● | ● | 0 |
|---|---|---|---|---|---|---|
| Click the article number for online configuration in the PIA Life Cycle Portal. | | | | | | |
| **Explosion protection** | | | | | | |
| Non-explosion-proof | | 8 | | | | |
| In type of protection (Ex)<br>• Intrinsic safety<br>• Non-sparking | | 6 | | | | |
| **Cable length** | | | | | | |
| 6 m (19.68 ft) | | | | N | | |
| 20 m (65.67 ft) | | | | P | | |
| 40 m (131.23 ft) | | | | R | | |
| **Actuator type** | | | | | | |
| Linear actuator for stroke ≤ 14 mm (0.55 inches)<br>Mounting is actuator-specific and is not included in the scope of delivery as a mounting kit. Mounting kit 6DR4004-8V can be used on NAMUR actuators for this purpose. | | | | | 2 | |
| Linear actuator for strokes ≥ 14 ... 130 mm (0.55 ... 5.12 inches)<br>Mounting is actuator-specific and is not included in the scope of delivery as a mounting kit. For mounting on NAMUR actuators and, depending on the stroke of the mounting kit 6DR4004-8V (2 ... 35mm) or in addition to the -8V, the long lever handle 6DR4004-8L (35 ... 120 mm) may be used. | | | | | 3 | |
| Part-turn actuator, magnet holder made of anodized aluminum<br>A NAMUR mount is not included in the scope of delivery but can be ordered separately with 6DR4004-1D/-2D/-3D/-4D. | | | | | 4 | |

***Position Transmitter***

- See technical specifications for explosion protection (ATEX / IECEx / FM / CSA / not Ex d).
- SIPART PS2 externally mounted in protected area.
- Requirement: SIPART PS2 with integrated Analog Input Module (AIM) as order option or retrofit with 6DR4004-6F/-8F.
- Variant with cable and cable socket M12 stainless steel 6DR4004-5D on request

| | Article No. |
|---|---|
| **Position Transmitter (potentiometer)**<br>In aluminum enclosure with potentiometer, without electronics, without pneumatic block, for separate mounting of position detection on actuator. | **6DR4004-1ES** |
| **Position Transmitter (NCS)**<br>Aluminum enclosure with non-contacting position detection (NCS), without electronics, without pneumatic block, for separate mounting of position detection on actuator. | **6DR4004-2ES** |
| **Position Transmitter (NCS, ILS)**<br>In aluminum enclosure with non-contacting position detection (NCS) and inductive limit switches (ILS), without electronics, without pneumatic block, for separate mounting of position detection on actuator. | **6DR4004-3ES** |

## Selection and ordering data (continued)

| | Article No. |
|---|---|
| **Position Transmitter (NCS, MLS)**<br>In aluminum enclosure with non-contacting position detection (NCS) and mechanic limit switches (MLS), without electronics, without pneumatic block, for separate mounting of position detection on actuator. | 6DR4004-4ES |

Other accessories

| | Article No. |
|---|---|
| **Control unit for 3× SIPART PS2 4 ... 20 mA**<br>19-inch control unit with 3× electronics, 2-wire, 4 ... 20 mA, for remote installation of the electronics for the SIPART PS2 6DR59* in a protected area (e.g. against radiation, dirt, temperature, etc.) | A5E00151560 |
| **Control unit for 5× SIPART PS2 PA**<br>19-inch control unit including 5× PROFIBUS PA module, for remote installation of the electronics of the SIPART PS2 6DR59* in a protected area (e.g. against radiation, dirt, temperature, etc.), order 1× plug panel A5E00252845 or A5E00252830 separately. | A5E00250501 |
| **Control unit for 10× SIPART PS2×PA**<br>19-inch control unit including 10× PROFIBUS PA module, for remote installation of the electronics of the SIPART PS2 6DR59* in a protected area (e.g. against radiation, dirt, temperature, etc.), order 2× plug panels A5E00252845 or A5E00252830 separately. | A5E00250502 |
| **Control unit for 15× SIPART PS2 PA**<br>19-inch control unit including 15× PROFIBUS PA module, for remote installation of the electronics of the SIPART PS2 6DR59* in a protected area (e.g. against radiation, dirt, temperature, etc.), order 3x plug panels A5E00252845 or A5E00252830 separately. | A5E00250503 |
| **Plug panel for control unit (50)**<br>Connection panel (rear panel) for 19-inch PROFIBUS PA control unit with Burndy 50 plug (50 pins) to connect a max. of 5 units of SIPART PS2 w/o electronics module (6DR59*). The Burndy 50 cable socket is already included in the scope of delivery.<br>Order in addition: 1× for A5E00250501, 2× for A5E00250502 and 3× for A5E00250503. | A5E00252845 |
| **Plug panel for control unit (50 + 8)**<br>Connection panel (rear panel) for 19-inch PROFIBUS PA control unit with Burndy 50 plug (50 pins) to connect a max. of 5 units of SIPART PS2 w/o electronics (6DR59*). Additional Burndy 8 plug (8 pins) to link communication between control units. The Burndy 50 cable socket is already included in the scope of delivery.<br>Order in addition: 1× for A5E00250501, 2× for A5E00250502 and 3× for A5E00250503 | A5E00252830 |
| **Analog Input Module (AIM)**<br>For connecting external position detection systems to the SIPART PS2, for example Position Transmitter 6DR4004-1ES/2ES/3ES/4ES, NCS sensor or others. | |
| • With explosion protection | 6DR4004-6F |
| • Without explosion protection | 6DR4004-8F |
| **Digital I/O Module (DIO)**<br>1 digital input, 3 digital outputs (2 limits min. or max., 1 fault indicator) | |
| • With explosion protection | 6DR4004-6A |
| • Without explosion protection | 6DR4004-8A |
| **Inductive Limit Switches (ILS)**<br>2 inductive limit switches and 1 digital output (DQ) | |
| • With explosion protection | 6DR4004-6G |
| • Without explosion protection | 6DR4004-8G |

## Selection and ordering data (continued)

| | Article No. |
|---|---|
| **Mechanic Limit Switches (MLS)**<br>2 mechanical limit switches and 1 digital output (DQ). Not applicable for natural gas applications! | |
| • With explosion protection | 6DR4004-6K |
| • Without explosion protection | 6DR4004-8K |
| **Analog Output Module (AOM)**<br>For analog position feedback 4 ... 20 mA | |
| • With explosion protection | 6DR4004-6J |
| • Without explosion protection | 6DR4004-8J |
| **Internal NCS module**<br>For non-contacting position detection, for installation in the SIPART PS2 | |
| • Without explosion protection | 6DR4004-5L |
| • With explosion protection | 6DR4004-5LE |
| **Overvoltage protection** | |
| Overvoltage protection up to 6 kV for 2-wire, M20 × 1.5 | 6DR4004-1LP |
| Overvoltage protection up to 6 kV for 3-wire, M20 × 1.5 | 6DR4004-2LP |
| Overvoltage protection up to 6 kV for 4-wire, M20 × 1.5 | 6DR4004-3LP |
| Overvoltage protection up to 6 kV for PA/FF, M20 × 1.5 | 6DR4004-4LP |
| **Cable socket M12 stainless steel** | |
| A-coding, for cable mounting (0.25 ... 0.5 mm²). The cable socket can be connected to SIPART PS2 with M12 device plug. | 6DR4004-5A |
| D-coding, for cable mounting (0.25 ... 0.5 mm²). The cable socket can be connected to SIPART PS2 with M12 device plug. | 6DR4004-5D |
| **Gauge block** | |
| With pressure gauges made of plastic IP31 (MPa, bar) | |
| • Block made of aluminum, single-acting, G¼ | 6DR4004-1M |
| • Block made of aluminum, double-acting, G¼ | 6DR4004-2M |
| With pressure gauges made of plastic IP31 (MPa, psi) | |
| • Block made of aluminum, single-acting, ¼-18 NPT | 6DR4004-1MN |
| • Block made of aluminum, double-acting, ¼-18 NPT | 6DR4004-2MN |
| With pressure gauges made of metal IP44 (MPa, bar, psi) | |
| • Block made of aluminum, single-acting, G¼ | 6DR4004-1P |
| • Block made of aluminum, double-acting, G¼ | 6DR4004-2P |
| • Block made of aluminum, single-acting, ¼-18 NPT | 6DR4004-1PN |
| • Block made of aluminum, double-acting, ¼-18 NPT | 6DR4004-2PN |
| With pressure gauges made of stainless steel IP54 (MPa, bar, psi) | |
| • Block made of stainless steel 316, single-acting, G¼ | 6DR4004-1Q |
| • Block made of stainless steel 316, double-acting, G¼ | 6DR4004-2Q |
| • Block made of stainless steel 316, single-acting, ¼-18 NPT | 6DR4004-1QN |
| • Block made of stainless steel 316, double-acting, ¼-18 NPT | 6DR4004-2QN |
| Gauge block 316 with gauge IP65, 316L (MPa, bar, psi) | **Can be ordered on request** |

## Selection and ordering data (continued)

| | Article No. |
|---|---|
| **Venting gauge block**<br>Depressurizing of Y2 on compressed air failure with pressure gauges made of metal IP44 (MPa, bar, psi). The double-acting actuator with springs moves into the safety position. | |
| • Block made of aluminum, double-acting, G¼ | 6DR4004-2RE |
| • Block made of aluminum, double-acting, ¼-18 NPT | 6DR4004-2RF |
| **Booster (Cv = 2)**<br>Aluminum with gauges made of metal IP44 (MPa, bar, psi) | |
| For SIPART PS2 enclosure variants 6DR5..0/2/3. (non-flameproof enclosure) | |
| • Single-acting, G½ | 6DR4004-1RJ |
| • Double-acting, G½ | 6DR4004-2RJ |
| • Single-acting, ½-14 NPT | 6DR4004-1RK |
| • Double-acting, ½-14 NPT | 6DR4004-2RK |
| For SIPART PS2 enclosure variants 6DR5..5/6. (flameproof enclosure) | |
| • Single-acting, G½ | 6DR4004-1RP |
| • Double-acting, G½ | 6DR4004-2RP |
| • Single-acting, ½-14 NPT | 6DR4004-1RQ |
| • Double-acting, ½-14 NPT | 6DR4004-2RQ |
| **Interface according to VDI/VDE 3847**<br>For single- and double-acting, with CATS (Clean Air To Spring) only for single-acting, not for flameproof enclosures | 6DR4004-5PB |
| **Mounting kit for NAMUR part-turn actuators** | |
| VDI/VDE 3845, with plastic coupling wheel, without mounting console | 6DR4004-8D |
| VDI/VDE 3845, with stainless steel coupling, without mounting console | TGX:16300-1556 |
| Console for mounting the SIPART PS2, NCS sensor or Position Transmitter on NAMUR part-turn actuators VDI/VDE 3845 | |
| • 80 × 30 × 20 mm (3.15 × 1.18 × 0.79 inches) | 6DR4004-1D |
| • 80 × 30 × 30 mm (3.15 × 1.18 × 1.18 inches) | 6DR4004-2D |
| • 130 × 30 × 30 mm (5.12 × 1.18 × 1.18 inches) | 6DR4004-3D |
| • 130 × 30 × 50 mm (5.12 × 1.18 × 1.97 inches) | 6DR4004-4D |
| **Mounting kit for other part-turn actuators**<br>The following mounting consoles can be used together with the NAMUR part-turn actuator mounting kit 6DR4004-8D. | |
| SPX (DEZURIK) Power Rac, sizes R1, R1A, R2 and R2A | TGX:16152-328 |
| Masoneilan Camflex II | TGX:16152-350 |
| Fisher 1051/1052/1061, sizes 30, 40, 60 to 70 | TGX:16152-364 |
| Fisher 1051/1052, size 33 | TGX:16152-348 |
| **Mounting kit for NAMUR linear actuators** | |
| NAMUR-linear actuator with short lever (2 ... 35 mm (0.08 ... 1.38 inches)) | 6DR4004-8V |
| Lever arm for strokes of 35 ... 130 mm (1.38 ... 5.12 inches) without NAMUR mounting bracket | 6DR4004-8L |
| Reduced mounting kit (as for 6DR4004-8V but without fixing angle and U-bracket), with short lever with up to 35 mm (1.38 inches) stroke | 6DR4004-8VK |
| Reduced mounting kit (as for 6DR4004-8V but without fixing angle and U-bracket), with long lever > 35 mm (1.38 inches) stroke | 6DR4004-8VL |

## Selection and ordering data (continued)

| | Article No. |
|---|---|
| **Mounting console, stainless steel 316L**<br>Robust design to support extended loads like SIPART PS2 in a flameproof 316L stainless steel enclosure or as a variant with the booster. The console gets mounted and therefore supported by both stands of the actuator. | 6DR4004-8R |
| Tapered roller made of stainless steel 316 for replacing the tapered roller made of plastic in the mounting kits 6DR4004-8V, -8VK, -8VL | 6DR4004-3N |
| Terminal blocks made of stainless steel 316 for replacement of the aluminum terminal blocks in the 6DR4004-8V, -8VK and -8VL mounting kits | 6DR4004-3M |
| **Mounting kit for other linear actuators** | |
| MASONEILAN type 87/88 | TGX:16152-1210 |
| MASONEILAN type 37/38, all sizes | TGX:16152-1215 |
| Fisher type 657/667, sizes 30 ... 80 | TGX:16152-900 |
| Samson actuator type 3277<br>Yoke dimension = 101 mm (integrated connection without pipe), not for Ex d | 6DR4004-8S |
| **Pneumatic terminal strip made of stainless steel 316**<br>As spare part or to replace the pneumatic terminal strip made of aluminum | |
| • Single-acting, G¼ | 6DR4004-1R |
| • Double-acting, G¼ | 6DR4004-2R |
| • Single-acting, ¼-18 NPT | 6DR4004-1RN |
| • Double-acting, ¼-18 NPT | 6DR4004-2RN |
| **Connection block**<br>For safety solenoid valve with extended mounting flange according to NAMUR | |
| • For mounting according to IEC 534-6 | 6DR4004-1B |
| • For SAMSON actuator (integrated mounting) see above | 6DR4004-1C |
| **HART modem with USB interface** | 7MF4997-1DB |
| **SIPART PS2 / PS100 demo case** | 6DR4004-5DE |

## Technical specifications

| SIPART PS2 (all device designs) | |
|---|---|
| **Operating conditions** | |
| Ambient conditions | For indoor and outdoor use |
| Ambient temperature | In hazardous areas, observe the maximum permissible ambient temperature according to the temperature class. |
| • Permissible ambient temperature for operation[1] | -30 ... +80 °C (-22 ... +176 °F)<br>Optional -40 ... +80 °C (-40 ... +176 °F) |
| • Height | ≤ 2 000 m above mean sea level.<br>At altitudes greater than > 2 000 m above mean sea level, use a suitable power supply. |
| • Relative humidity | 0 ... 100% |
| Degree of protection[2] | IP66/Type NEMA 4X |
| Corrosion protection according to EN ISO 9227:2022 and EN ISO 12944:2017 | |
| • 6DR5..0 Polycarbonate enclosure | C5-M medium durability |
| • 6DR5..3 Aluminum enclosure and 6DR5..5 Aluminum enclosure, flameproof | C5-M medium durability |
| • 6DR5..2 Stainless steel enclosure and 6DR5..6 Stainless steel enclosure, flameproof | C5-M high durability |
| Mounting position | Any. Electrical connections and exhaust opening not facing up in wet environment (outdoor/rain). |
| Vibration resistance | |
| • Harmonic oscillations (sine) according to EN 60068-2-6/10.2008 | 3.5 mm (0.14"), 2 ... 27 Hz, 3 cycles/axis<br>98.1 m/s² (321.84 ft/s²), 27 ... 300 Hz, 3 cycles/axis |
| • Bumping (half-sine) according to EN 60068-2-27/02.2010 | 150 m/s² (492 ft/s²), 6 ms, 1 000 shocks/axis |
| • Noise (digitally controlled) according to EN 60068-2-64/04.2009 | 10 ... 200 Hz; 1 $(m/s^2)^2$/Hz (3.28 $(ft/s^2)^2$/Hz)<br>200 ... 500 Hz; 0.3 $(m/s^2)^2$/Hz (0.98 $(ft/s^2)^2$/Hz)<br>4 hours/axis |
| • Recommended continuous duty range of the complete valve | ≤ 30 m/s² (98.4 ft/s²) without resonance sharpness |
| Climatic class | According to IEC EN 60721-3 |
| • Storage | 1K23, -40 ... +80 °C (-40 ... +176 °F) |
| • Transport | 2K12, -40 ... +80 °C (-40 ... +176 °F) |
| **Pneumatic data** | |
| Auxiliary power (inlet air) | Compressed air, carbon dioxide ($CO_2$), nitrogen ($N_2$), noble gasses or natural gas |
| • Pressure[3] | 1.4 ... 7 bar (20.3 ... 101.5 psi) |
| Air quality according to ISO 8573-1 | |
| • Solid particulate size and density | Class 3 |
| • Pressure dew point | Class 3 (min. 20 K (36 °F) below ambient temperature) |
| • Oil content | Class 3 |
| Unrestricted flow (DIN 1945) | |
| • Inlet air (pressurize actuator)[4] | |
| - 2 bar; 0.1 KV (29 psi; 0.116 CV) | 4.1 Nm³/h (18.1 USgpm) |
| - 4 bar; 0.1 KV (58 psi; 0.116 CV) | 7.1 Nm³/h (31.3 USgpm) |
| - 6 bar; 0.1 KV (87 psi; 0.116 CV) | 9.8 Nm³/h (43.1 USgpm) |
| • Exhaust air (depressurize actuator for all versions except fail in place)[4] | |
| - 2 bar; 0.2 KV (29 psi; 0.232 CV) | 8.2 Nm³/h (36.1 USgpm) |
| - 4 bar; 0.2 KV (58 psi; 0.232 CV) | 13.7 Nm³/h (60.3 USgpm) |
| - 6 bar; 0.2 KV (87 psi; 0.232 CV) | 19.2 Nm³/h (84.5 USgpm) |
| • Exhaust air (depressurize actuator for fail in place version) | |
| - 2 bar; 0.1 KV (29 psi; 0.116 CV) | 4.3 Nm³/h (19.0 USgpm) |
| - 4 bar; 0.1 KV (58 psi; 0.116 CV) | 7.3 Nm³/h (32.2 USgpm) |
| - 6 bar; 0.1 KV (87 psi; 0.116 CV) | 9.8 Nm³/h (43.1 USgpm) |
| Restrictor ratio | Adjustable |

## Technical specifications (continued)

| SIPART PS2 (all device designs) | |
|---|---|
| Typical auxiliary power consumption in the controlled state | 0.01 Nm³/h (0.044 US gpm) |
| Sound pressure | $L_{Aeq}$ < 75 dB<br>$L_{Amax}$ < 80 dB |
| Sound pressure with installed Siemens booster | $L_{Aeq}$ < 95 dB<br>$L_{Amax}$ < 98 dB |
| **Structural design** | |
| Mode of operation | |
| • Range of stroke (linear actuators) | 3 ... 130 mm (0.12 ... 5.12 inches); higher range of stroke on request |
| • Angle of rotation range (part-turn actuators) | 30 ... 100° (up to 180° on request) |
| Mounting type | |
| • On linear actuators | Using mounting kit 6DR4004-8V and where necessary with an additional lever arm 6DR4004-8L on actuators according to IEC 60534-6-1 (NAMUR) with ribs, bars or flat face. |
| • On part-turn actuators | Using mounting kit 6DR4004-8D or TGX:16300-1556 on actuators with mounting plane according to VDI/VDE 3845 and IEC 60534-6-2.<br>The actuator-specific mounting console 6DR4004-1D ... 4D must be ordered separately, see the selection and ordering data. |
| Weight, positioner without option modules or accessories | |
| • 6DR5..0 Glass-fiber reinforced polycarbonate enclosure | Approx. 0.9 kg (1.98 lbs) |
| • 6DR5.11 Aluminum enclosure, only single-acting | Approx. 1.3 kg (2.86 lbs) |
| • 6DR5..2 Stainless steel enclosure | Approx. 3.9 kg (8.6 lbs) |
| • 6DR5..3 Aluminum enclosure | Approx. 1.6 kg (3.53 lbs) |
| • 6DR5..5 Aluminum, flameproof | Approx. 5.2 kg (11.46 lbs) |
| • 6DR5..6 Stainless steel enclosure, flameproof | Approx. 8.4 kg (18.5 lbs) |
| Material | |
| Dimensions | See "Dimensional drawings" |
| Device designs | |
| • In polycarbonate enclosure 6DR5..0 | Single-acting and double-acting |
| • In aluminum enclosure 6DR5..1 | Single-acting |
| • In aluminum enclosures 6DR5..3 and 6DR5..5 | Single-acting and double-acting |
| • In stainless steel enclosures 6DR5..2 and 6DR5..6 | Single-acting and double-acting |
| Gauge block | |
| • Degree of protection with: | |
| - Pressure gauge made of plastic | IP31 |
| - Gauge made of metal | IP44 |
| - Pressure gauge made of stainless steel 316 | IP54 |
| • Vibration resistance | According to EN 837-1 |
| Connections, electrical | |
| • Screw terminals | 2.5 mm² AWG30-14 |
| • Cable bushing | |
| - Without explosion protection as well as with Ex i | M20x1.5 or ½-14 NPT |
| - With explosion protection Ex d | Ex d-certified M20x1.5; ½-14 NPT or M25x1.5 |
| Connections, pneumatic | Internal thread G¼ or ¼-18 NPT |
| **Controller** | |
| Controller unit | |
| • Five point controller | Adaptive |

## Technical specifications (continued)

| SIPART PS2 (all device designs) | |
|---|---|
| • Deadband | |
| - dEbA = Auto | Adaptive |
| - dEbA = 0.1 ... 10% | Can be set as fixed value |
| Analog-to-digital converter | |
| • Scan time | 10 ms |
| • Resolution | ≤ 0.05% |
| • Transmission error | ≤ 0.2% |
| • Temperature influence effect | ≤ 0.1%/10 K (≤ 0.1%/18 °F) |
| **Certificates and approvals** | |
| DoC compliance | The applicable directives and applied standards with their revision levels can be found in the Declaration of Conformity on the internet. |
| UL conformity | The SIPART PS2 has documented compliance with the safety requirements in the USA and Canada. These are UL classified, recognized and listed. |
| Explosion protection | You can find details on explosion protection in the compact operating instructions and the explosion protection certificates. |

1) At ≤ -10 °C (≤ 14 °F), the refresh rate of the local display is limited. When using Analog Output Module (AOM), only T4 is permissible.
2) Max. impact energy 1 joule for enclosure with inspection window 6DR5..0 and 6DR5..1 or max. 2 joules for 6DR5..3.
3) The following applies to fail in place double-acting: 3 ... 7 bar (43.5 ... 101.5 psi)
4) When using Ex d versions (6DR5..5-... and 6DR5..6-...), values are reduced by approximately 20%.

| SIPART PS2 with 4 ... 20 mA / HART | Electronics without explosion protection |
|---|---|
| **Electrical specifications** | |
| Current input $I_W$ | |
| • Nominal signal range | 4 ... 20 mA |
| • Test voltage | 840 V DC, 1 s |
| • Digital input BIN1 (terminals 9/10; galvanically connected to basic device) | Suitable only for floating contact; max. contact load < 5 µA at 3 V |
| ***2-wire connection (terminals 6/8)*** | |
| 6DR50.. and 6DR53..; 4 ... 20 mA 6DR51.. and 6DR52..; HART | |
| Minimum current to maintain operation | ≥ 3.8 mA |
| Required load voltage $U_B$ (corresponds to Ω at 20 mA) | |
| • 4 ... 20 mA (6DR50..) | |
| - Typical | 6.36 V (= 318 Ω) |
| - Max. | 6.48 V (= 324 Ω) |
| • 4 ... 20 mA (6DR53..) | |
| - Typical | 7.9 V (= 395 Ω) |
| - Max. | 8.4 V (= 420 Ω) |
| • HART (6DR51..) | |
| - Typical | 6.6 V (= 330 Ω) |
| - Max. | 6.72 V (= 336 Ω) |
| • HART (6DR52..) | |
| - Typical | - |
| - Max. | - |
| • Static destruction limit | ± 40 mA |
| Effective internal capacitance $C_i$ | |
| • 4 ... 20 mA | - |
| • HART | - |

## Technical specifications (continued)

| SIPART PS2 with 4 ... 20 mA / HART | Electronics without explosion protection |
|---|---|
| Effective internal inductance $L_i$ | |
| • 4 ... 20 mA | - |
| • HART | - |
| For connecting to circuits with the following peak values | - |
| ***3-/4-wire connection (terminals 2/4 and 6/8)*** | |
| 6DR53..; 4 ... 20 mA | |
| Load voltage at 20 mA | ≤ 0.2 V (= 10 Ω) |
| Auxiliary power $U_{Aux}$ | 18 ... 35 V DC |
| Current consumption $I_H$ | ($U_{Aux}$ -7.5 V)/2.4 kΩ [mA] |
| Effective internal capacitance $C_i$ | - |
| Effective internal inductance $L_i$ | - |
| For connecting to circuits with the following peak values | - |
| Galvanic isolation | between $U_{Aux}$ and $I_W$ |
| **HART communication** | |
| HART version | 7 |
| PC parameterization software | SIMATIC PDM; supports all device objects. The software is not included in the scope of delivery. |

| Pressure sensors 6DR51.. -Z P01/ -Z P02 | |
|---|---|
| Required load voltage $U_B$ (corresponds to Ω at 20 mA) | max. 9.4 V (= 470 Ω) |
| Static destruction limit | ± 30 V |

| SIPART PS2 with PROFIBUS PA/with FOUNDATION Fieldbus | Electronics without explosion protection |
|---|---|
| **Electrical specifications** | |
| ***Auxiliary power supply, bus circuit*** | Bus-powered |
| Bus voltage | 9 ... 32 V |
| For connecting to circuits with the following peak values | |
| • Bus connection with FISCO supply unit | |
| • Bus connection with barrier | |
| Effective internal capacitance $C_i$ | - |
| Effective internal inductance $L_i$ | - |
| Current consumption | 11.5 mA ± 10% |
| Additional fault current | 0 mA |
| ***Safety shutdown can be activated with "jumper" (terminals 81/82)*** | Galvanically isolated from bus circuit and digital input |
| • Input resistance | > 20 kΩ |
| • Signal state "0" (shutdown active) | 0 ... 4.5 V or unconnected |
| • Signal state "1" (shutdown not active) | 13 ... 30 V |
| For connecting to power supply with the following peak values | |
| Effective internal capacitance and inductance | - |
| Digital input DI1 for PROFIBUS (terminals 9/10); electrically connected to the bus circuit) | Jumpered or connection to switching contact. Suitable only for floating contact; max. contact load < 5 µA at 3 V |
| Galvanic isolation | |
| • For basic device without explosion protection | Galvanic isolation between basic device and the input for safety shutdown, as well as the outputs of the option modules |
| Test voltage | 840 V DC, 1 s |

## Technical specifications (continued)

| SIPART PS2 with PROFIBUS PA/with FOUNDATION Fieldbus | Electronics without explosion protection |
|---|---|
| **PROFIBUS PA communication** | |
| Communication | Layers 1 and 2 according to PROFIBUS PA, transmission technology according to IEC 61158-2; slave function; layer 7 (protocol layer) according to PROFIBUS DP, EN 50170 standard with the extended PROFIBUS functions (all data acyclic, manipulated variable, feedbacks and status also cyclic) |
| C2 connections | Four connections to master class 2 are supported; automatic connection setup 60 s after break in communication |
| Device profile | PROFIBUS PA profile B, version 3.02, more than 150 objects |
| Response time to master message | Typically 10 ms |
| Device address | 126 (when delivered) |
| PC parameterization software | SIMATIC PDM; supports all device objects. The software is not included in the scope of delivery. |
| **FOUNDATION Fieldbus communication** | |
| Communications group and class | According to technical specification of the FOUNDATION Fieldbus for H1 communication |
| Function blocks/functions | Group 3, Class 31PS (Publisher Subscriber), 1 Resource Block (RB2), 1 Analog Output Function Block (AO), 1 PID Function Block (PID), 1 Transducer Block (Standard Advanced Positioner Valve), Link Active Scheduler (LAS) function |
| Execution times of the blocks | AO: 30 ms<br>PID: 40 ms |
| Physical layer profile | 123, 511 |
| FF registration | Tested with ITK 6.x |
| Device address | 22 (when delivered) |

### *Option modules*

| Digital I/O Module (DIO) | Without explosion protection, suitable for Ex d 6DR4004-8A |
|---|---|
| 3 digital output current circuits | • Alarm output A1: Terminals 41 and 42<br>• Alarm output A2: Terminals 51 and 52<br>• Alarm output: Terminals 31 and 32 |
| • Auxiliary power $U_{Aux}$ | ≤ 35 V and the current consumption is to be limited to < 25 mA |
| • Signal state | |
| - High (not addressed) | Conductive, R = 1 kΩ[1] |
| - Low[2] (addressed) | Blocked, $I_R$ < 60 µA |
| • For connecting to circuits with the following peak values | - |
| 1 circuit | Digital input DI2: Terminals 11 and 12, terminals 21 and 22 (jumper) |
| • Electrically connected to the basic device | |
| - Signal state 0 | Floating contact, open |
| - Signal state 1 | Floating contact, closed |
| - Contact load | 3 V, 5 µA |
| • Galvanically isolated from the basic device | |
| - Signal state 0 | ≤ 4.5 V or open |
| - Signal state 1 | ≥ 13 V |
| - Natural resistance | ≥ 25 kΩ |
| • Static destruction limit | ± 35 V |
| Galvanic isolation | The three outputs, the DI2 input and the basic device are galvanically isolated from each other. |

## Technical specifications (continued)

1) When using in the flameproof encapsulated enclosure, the current consumption must be restricted to 10 mA per output.
2) The status is also Low if the basic device is faulty or without auxiliary power.

| Analog Output Module (AOM) | Without explosion protection, suitable for Ex d 6DR4004-8J |
|---|---|
| DC output for position feedback | |
| 1 current output: Terminals 61 and 62 | 2-wire connection |
| Nominal signal range | 4 ... 20 mA, short-circuit-proof |
| Total operating range | 3.6 ... 20.5 mA |
| Auxiliary power $U_{Aux}$ | +12 ... +35 V |
| External load $R_B$ [kΩ] | ≤ ($U_{Aux}$ [V] − 12 V)/I [mA] |
| Transmission error | ≤ 0.3% |
| Temperature influence effect | ≤ 0.1%/10 K (≤ 0.1%/18 °F) |
| Resolution | ≤ 0.1% |
| Residual ripple | ≤ 1% |
| For connecting to circuits with the following peak values | - |
| Galvanic isolation | Galvanically isolated from the alarm option and safely isolated from the basic device |

| Inductive Limit Switches (ILS) | Without explosion protection, suitable for Ex d 6DR4004-8G |
|---|---|
| Limit transmitter with Inductive Limit Switches (ILS) and fault indicator | |
| 2 Inductive Limit Switches (ILS) | • Digital output (limit transmitter) A1: Terminals 41 and 42<br>• Digital output (limit transmitter) A2: Terminals 51 and 52 |
| • Connection | 2-wire system acc. to EN 60947-5-6 (NAMUR), for switching amplifier to be connected on load side |
| • Signal state High (not addressed) | > 2.1 mA |
| • Signal state Low (addressed) | < 1.2 mA |
| • 2 Inductive Limit Switches (ILS) | Type SJ2-SN |
| • Function | NC (normally closed) contact |
| • Connecting to circuits with the following peak values | Rated voltage 8 V current consumption:<br>≥ 3 mA (limit not addressed)<br>≤ 1 mA (limit addressed) |
| 1 alarm output | Digital output: Terminals 31 and 32 |
| • Connection | On switching amplifier according to EN 60947-5-6: (NAMUR), $U_{Aux}$ = 8.2 V, $R_i$ = 1 kΩ. |
| • Signal state High (not addressed) | R = 1.1 kΩ |
| • Signal state Low (addressed) | R = 10 kΩ |
| • Auxiliary power $U_{Aux}$ | $U_{Aux}$ ≤ DC 35 V<br>I ≤ 20 mA |
| • Connecting to circuits with the following peak values | - |
| Galvanic isolation | The 3 outputs are galvanically isolated from the basic device. |

| Mechanic Limit Switches (MLS) | With explosion protection Ex i 6DR4004-6K |
|---|---|
| Limit transmitter with mechanical switching contacts | |
| 2 limit value contacts | • Digital output A1: Terminals 41 and 42<br>• Digital output A2: Terminals 51 and 52 |
| For connecting to circuits with the following peak values: | |

## Technical specifications (continued)

| Mechanic Limit Switches (MLS) | With explosion protection Ex i 6DR4004-6K |
|---|---|
| • Max. switching voltage AC/DC | $U_i$ = 30 V |
| • Max. switching current AC/DC | $I_i$ = 100 mA |
| • Max. switching capacity | $P_i$ = 750 mW |
| 1 alarm output | Digital output: Terminals 31 and 32 |
| • Connection | On switching amplifier according to EN 60947-5-6: (NAMUR), $U_{Aux}$ = 8.2 V, $R_i$ = 1 kΩ |
| • Signal state High (not addressed) | R = 991 kΩ |
| • Signal state Low (addressed) | R = 10 kΩ |
| • Auxiliary power | $U_{Aux}$ ≤ DC 35 V<br>I ≤ 20 mA |
| Galvanic isolation | The 3 outputs are galvanically isolated from the basic device |

| Analog Input Module (AIM) | Without explosion protection 6DR4004-8F |
|---|---|
| | The Analog Input Module (AIM) 6DR4004-6F and -8F is required for connecting a Non Contacting Sensor (NCS) or Position Transmitter 6DR4004-1ES through -4ES. Potentiometers of a different design with resistance values between 3 and 20 kΩ and 4 ... 20 mA and 0 ... 10 V signals can also be connected. |
| R-potentiometer | |
| • Peak values when powered by the basic unit with PA (6DR55) or with FF communication (6DR56) | $U_{max}$ = 5 V |
| • Peak values when supplied by other basic units (6DR50/1/2/3/9) | $U_{max}$ = 5 V |
| Signal 20 mA | |
| • Nominal signal range | 0 ... 20 mA |
| • Internal load $R_B$ | 200 Ω |
| • Static destruction limit | 40 mA |
| Signal 10 V | |
| • Nominal signal range | 0 ... 10 V |
| • Internal resistance $R_i$ | 25 kΩ |
| • Static destruction limit | 20 V |
| Supply and signal circuits | Electrically connected to the basic device |

| NCS sensor | Without explosion protection 6DR4004-8N* |
|---|---|
| Position range | |
| • Linear actuator 6DR4004-.N.20 | 3 ... 14 mm (0.12 ... 0.55") |
| • Linear actuator 6DR4004-.N.30 | 10 ... 130 mm (0.39 ... 5.12"); up to 200 mm (7.87") on request |
| • Part-turn actuator | 30° ... 100° |
| Linearity for NCS sensor and internal NCS module 6DR4004-5L/-5LE (after correction by means of positioner) | ± 1 % |
| Hysteresis for NCS sensor and NCS module 6DR4004-5L/-5LE | ± 0.2 % |
| Temperature influence (range: Rotation angle 120° or stroke 14 mm) | ≤ 0.1%/10 K (≤ 0.1%/18 °F) for -20 ... +90 °C (-4 ... +194 °F)<br>≤ 0.2%/10 K (≤ 0.2%/18 °F) for -40 ... -20 °C (-40 ... -4 °F) |
| Climatic class | According to IEC EN 60721-3 |
| • Storage | 1K23, -40 ... +90 °C (-40 ... +194 °F) |
| • Transport | 2K12, -40 ... +90 °C (-40 ... +194 °F) |
| Continuous working temperature | -40 °C ... +90 °C (-40 °F ... +194 °F) |
| Vibration resistance | |

## Technical specifications (continued)

| NCS sensor | Without explosion protection 6DR4004-8N* |
|---|---|
| • Harmonic oscillations (sine) according to IEC 60068-2-6 | 3.5 mm (0.14"), 2 ... 27 Hz, 3 cycles/axis<br>98.1 m/s² (321.84 ft/s²), 27 ... 300 Hz, 3 cycles/axis |
| • Bumping according to IEC 60068-2-29 | 300 m/s² (984 ft/s²), 6 ms, 4000 shocks/axis |
| Degree of protection | IP68 according to IEC/EN 60529; Type 4X according to NEMA 250 |

| Booster | |
|---|---|
| **Operating conditions** | |
| Permissible ambient temperature for operation | -30 ... +80 °C (-22 ... +176 °F) |
| Climatic class | According to IEC EN 60721-3 |
| • Storage | 1K23, -40 ... +80 °C (-40 ... +176 °F) |
| • Transport | 2K12, -40 ... +80 °C (-40 ... +176 °F) |
| Vibration resistance | |
| • Harmonic oscillations | According to ISA-S75.13 |
| • Bumping (half-sine) according to EN 60068-2-27/02.2010 | 150 m/s² (492 ft/s²), 6 ms, 1 000 shocks/axis |
| **Structural design** | |
| Booster weight | |
| • Single-acting | |
| - Optional module for standard enclosure | 2.9 kg (6.5 lb) |
| - Installed with polycarbonate enclosure | 4.0 kg (8.8 lbs) |
| - Optional module for flameproof aluminum enclosure | 3.3 kg (7.3 lbs) |
| - Installed with flameproof aluminum enclosure | 7.9 kg (17.4 lbs) |
| • Double-acting | |
| - Optional module for standard enclosure | 4.3 kg (9.4 lbs) |
| - Installed with polycarbonate enclosure | 5.3 kg (11.7 lbs) |
| - Optional module for flameproof aluminum enclosure | 4.7 kg (10.4 lbs) |
| - Installed with flameproof aluminum enclosure | 9.3 kg (20.5 lbs) |
| Connections | |
| • Pneumatic | ½-14 NPT or G½ |
| **Pneumatic data** | |
| Auxiliary power (inlet air) | Compressed air, carbon dioxide ($CO_2$), nitrogen ($N_2$), noble gasses or natural gas |
| • Pressure | 1.4 ... 7 bar (20.3 ... 101.5 psi) |
| • Inlet air | According to ISO 8573-1 |
| • Air consumption | 1.2 × $10^{-2}$ $Nm^3/h$ (0.007SCFM) |
| Pressure gauge | Stainless steel enclosure MPa, bar, psi<br>Degree of protection IP54 |
| Flow capacity | Cv = 2.0 |

## Dimensional drawings

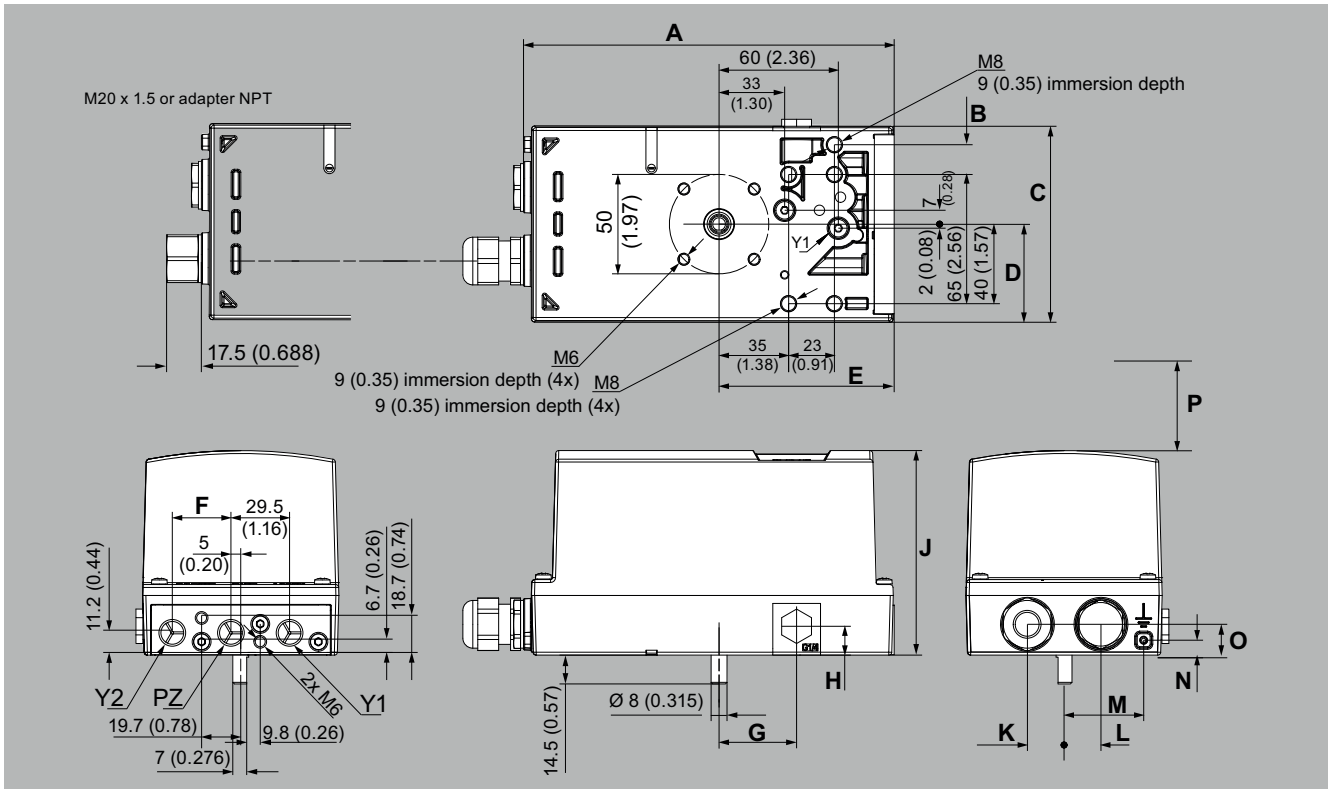


SIPART PS2, non-flameproof enclosure, dimensions in mm (inch)

| Value | 6DR5..0 G¼ | 6DR5..0 ¼-18 NPT | 6DR5..1 | 6DR5..2 | 6DR5..3 G¼ | 6DR5..3 ¼-18 NPT |
|---|---|---|---|---|---|---|
| A | 184.5 (7.26) | 186.5 (7.34) | 185 (7.28) | 186.5 (7.34) | 186.5 (7.34) | 188.5 (7.42) |
| B | - | - | - | 15 (0.59) | - | - |
| C | 95 (3.74) | 95 (3.74) | 84 (3.31) | 99 (3.90) | 98.6 (3.88) | 98.6 (3.88) |
| D | 48 (1.89) | 48 (1.89) | 34.5 (1.36) | 49.5 (1.95) | 48.6 (1.91) | 48.6 (1.91) |
| E | 88.5 (3.48) | 90.5 (3.56) | 88.8 (3.50) | 88.5 (3.48) | 88.8 (3.50) | 90.8 (3.57) |
| F[1] | 29.5 (1.16) | 29.5 (1.16) | - | 29.5 (1.16) | 29.5 (1.16) | 29.5 (1.16) |
| G | 39 (1.54) | 39 (1.54) | 44 (1.73) | 39 (1.54) | 39 (1.54) | 39 (1.54) |
| H | 14.5 (0.57) | 14.5 (0.57) | 16 (0.63) | 16 (0.63) | 14.5 (0.57) | 14.5 (0.57) |
| J | 96.6 (3.80) | 96.6 (3.80) | 96.6 (3.80) | 98.5 (3.88) | 103 (4.06) | 103 (4.06) |
| K | 18.5 (0.73) | 18.5 (0.73) | 22 (0.87) | 18.5 (0.73) | 18.5 (0.73) | 18.5 (0.73) |
| L | 18.5 (0.73) | 18.5 (0.73) | 7 (0.23) | 18.5 (0.73) | 18.5 (0.73) | 18.5 (0.73) |
| M | - | - | 26.5 | 41.5 | 40 | 40 |
| N | - | - | 7.5 | 7.5 | 7.5 | 7.5 |
| O | 14.5 (0.57) | 14.5 (0.57) | 14.5 (0.57) | 14.5 (0.57) | 15.5 (0.61) | 15.5 (0.61) |
| P | > 150 (5.91)[2] | > 150 (5.91)[2] | > 150 (5.91)[2] | > 150 (5.91)[2] | > 150 (5.91)[2] | > 150 (5.91)[2] |

[1] Dimension applies only to double-acting actuators.
[2] Adhere to this minimum clearance P for service and maintenance above the lid.

| SIPART PS2, non-flameproof enclosure | |
|---|---|
| 6DR5..0 | Polycarbonate enclosure; dimensions with pneumatic interface G¼ or ¼-18 NPT |
| 6DR5.11 | Aluminum enclosure, only single-acting |
| 6DR5..2 | Stainless steel enclosure, without inspection window |
| 6DR5..3 | Aluminum enclosure; dimensions with pneumatic connection G¼ or ¼-18 NPT |

## Dimensional drawings (continued)

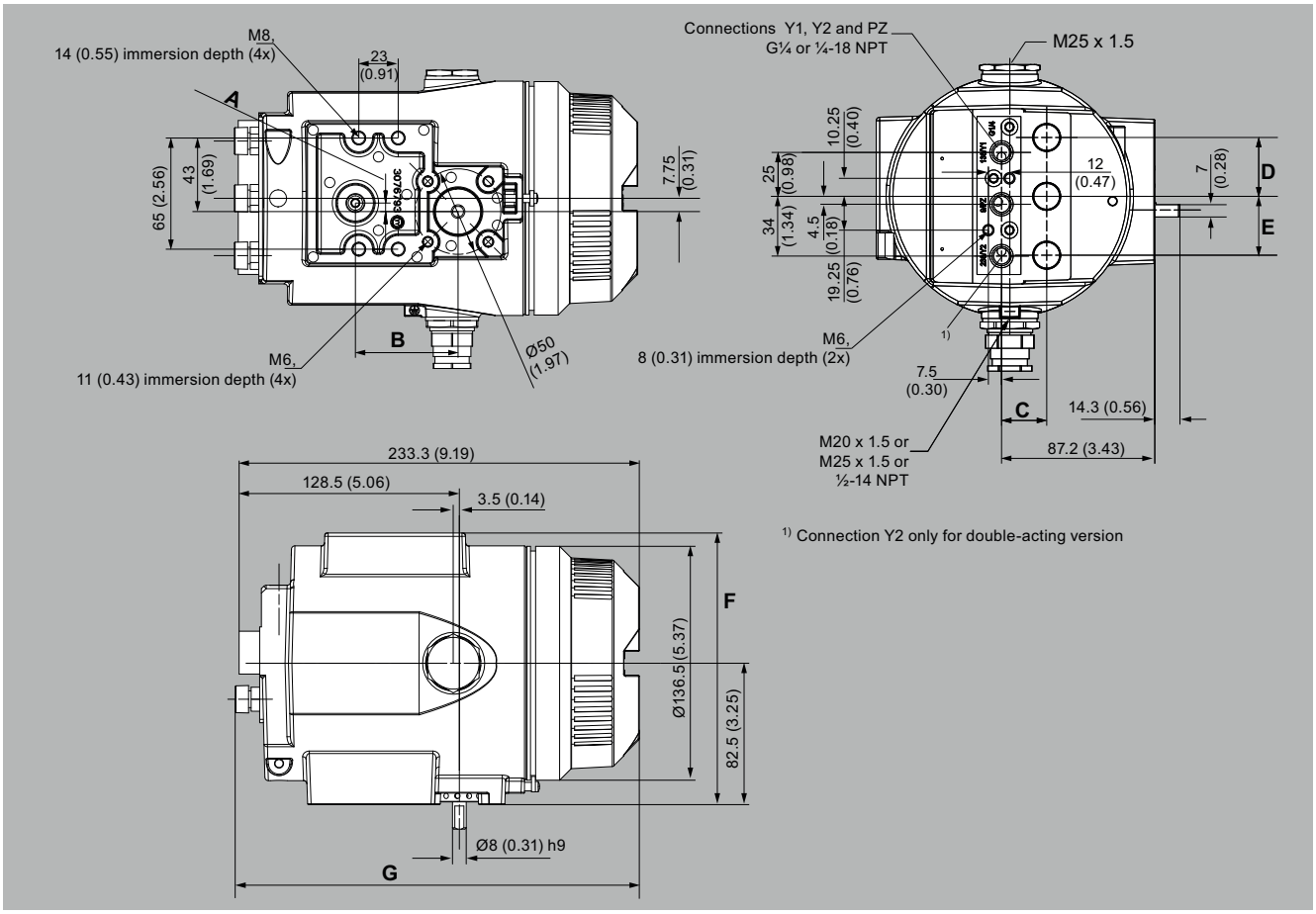


SIPART PS2, flameproof enclosure, dimensions in mm (inch)

| Value | 6DR5..5 | 6DR5..6 |
|---|---|---|
| A | 5 (0.2) | - |
| B | 60 (2.36) | - |
| C | 25.7 (1.01) | 21.7 (0.85) |
| D | 33.5 (1.32) | 25 (0.99) |
| E | 33.5 (1.32) | - |
| F | 158.5 (6.24) | 160 (6.3) |
| G | 235.3 (9.26) | 227.6 (8.96) |

| SIPART PS2, flameproof enclosure | |
|---|---|
| 6DR5..5 | Aluminum enclosure, flameproof; dimensions with pneumatic interface G¼ or ¼-18 NPT |
| 6DR5..6 | Stainless steel enclosure, flameproof |

## Dimensional drawings (continued)

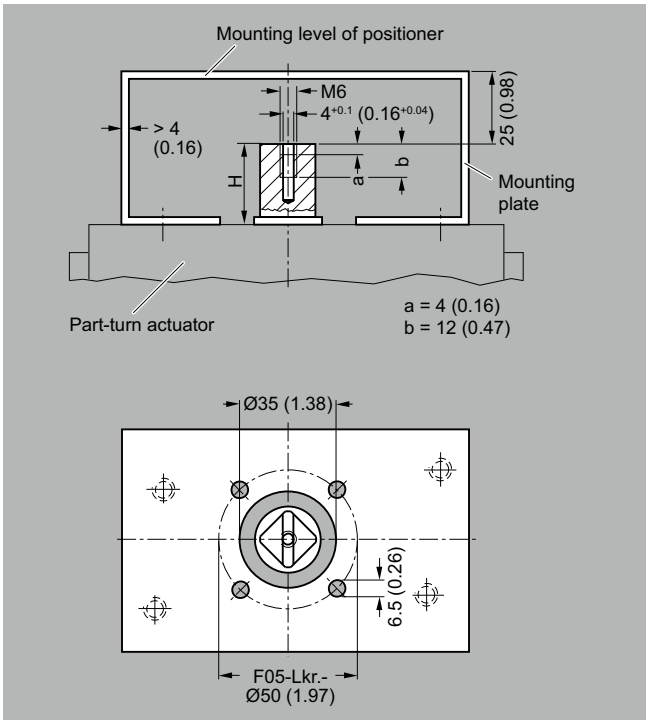


Mounting onto part-turn actuators; mounting console can be ordered via 6DR4004-1D/-2D/-3D/-4D, extract from VDI/VDE 3845, dimensions in mm (inch)

***Mounting kit for NAMUR linear actuators 6DR4004-8V***

- 1 mounting bracket
- 2 clamps
- 1 U-bracket
- 1 lever arm with adjustable tapered roller
- 2 U-bolts
- Various screws and lock washers

## Dimensional drawings (continued)

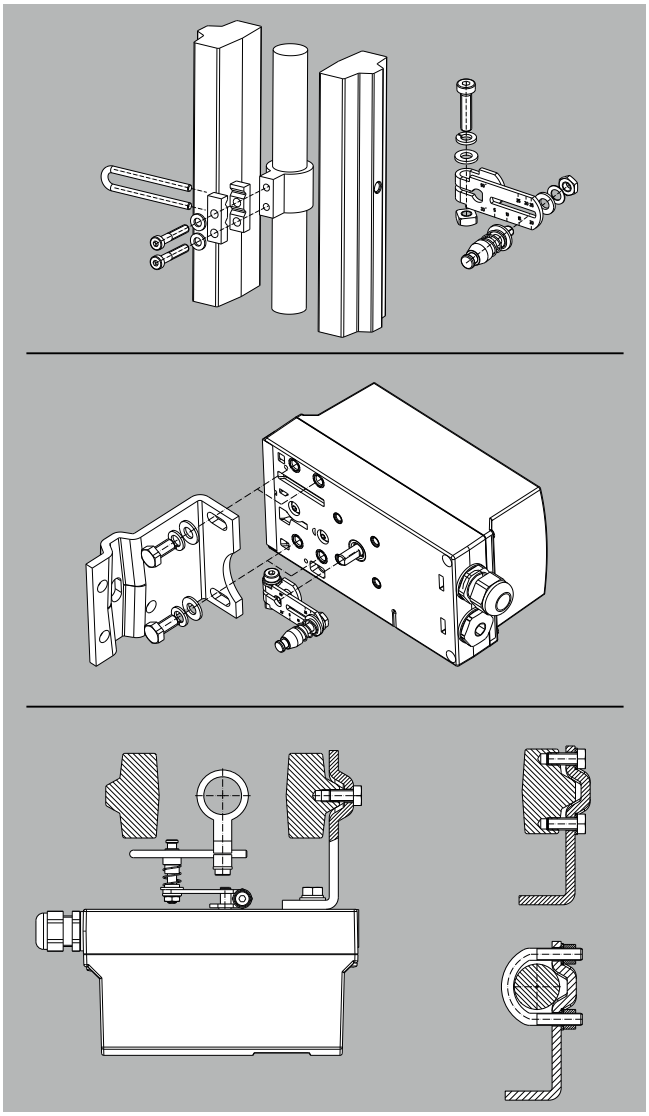

Mounting of SIPART PS2 on linear actuators

## Dimensional drawings (continued)

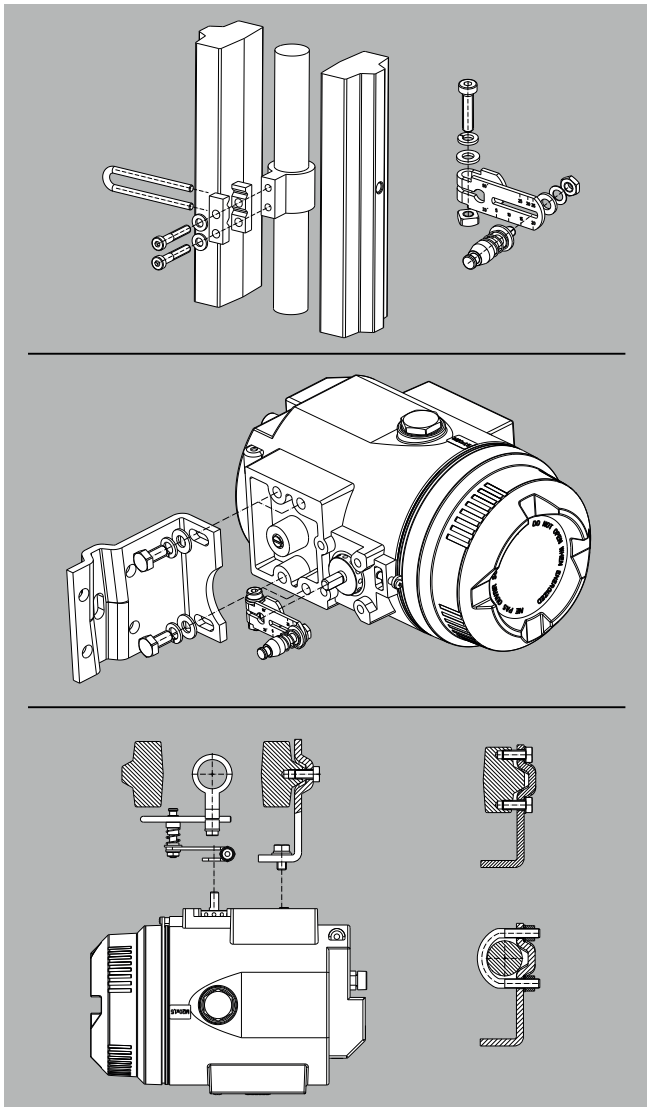

Mounting of SIPART PS2 in flameproof aluminum enclosure on linear actuators

***Mounting console made of stainless steel 316L for linear actuators 6DR4004-8R***

- Console with 2 adjustable mounting brackets
- 4 U-brackets for pillar mounting
- 1 lever arm with adjustable tapered roller
- 2 clamps with U-bracket
- Screws and lock washers

## Dimensional drawings (continued)

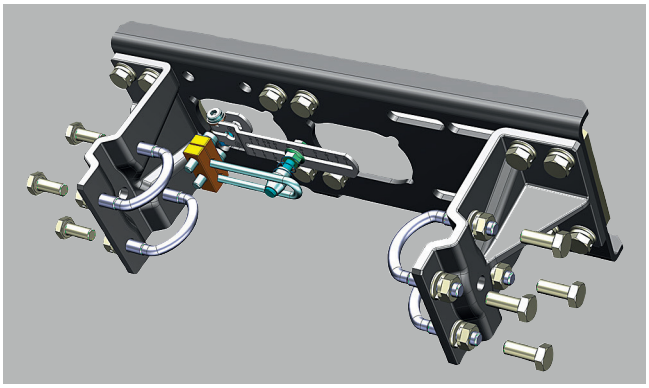

Mounting console made of stainless steel 316L 6DR4004-8R

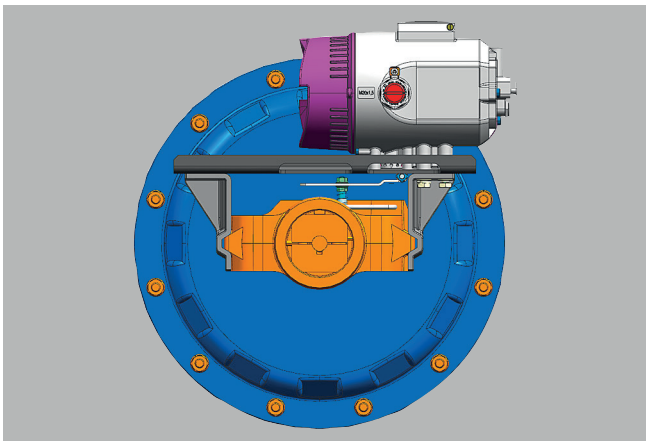

Mounting console stainless steel 316L mounted on SIPART PS2 in flameproof stainless steel enclosure 316L

***Mounting kit for NAMUR part-turn actuators 6DR4004-8D***

- 1 coupling wheel
- 1 driver pin
- 8 scales
- 1 pointer
- Various screws and lock washers

Notice

The mounting console for mounting on the part-turn actuators is not included in the scope of delivery, but can be ordered separately via 6DR4004-1D/-2D/-3D/-4D. Fixing screws are not included in the scope of delivery (see "Technical specifications")

## Dimensional drawings (continued)

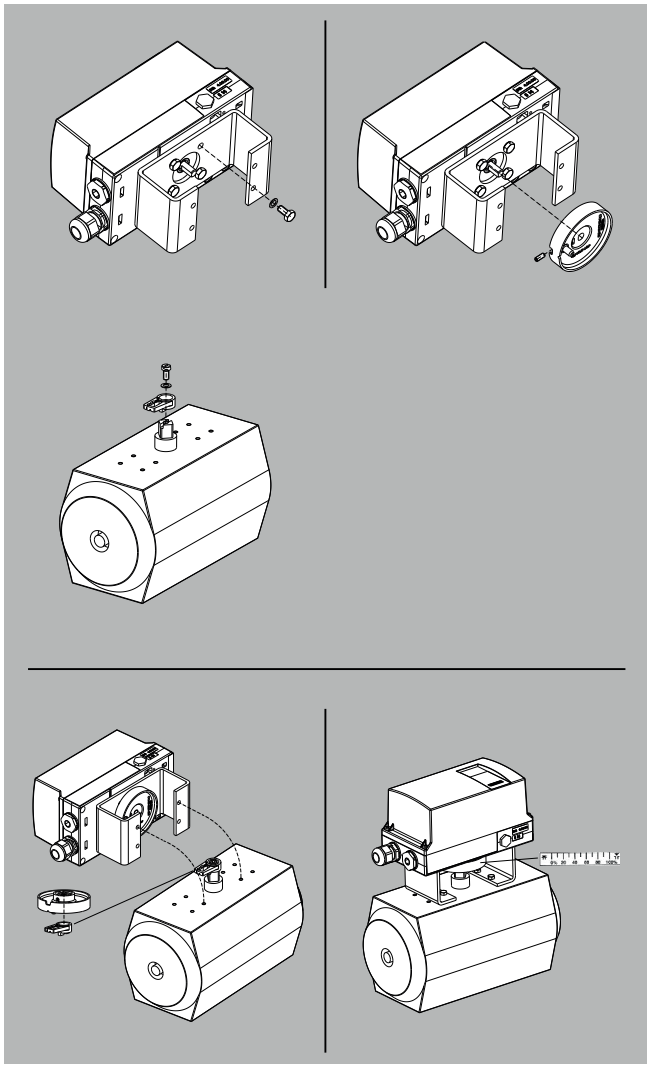

Mounting of SIPART PS2 on part-turn actuators

## Dimensional drawings (continued)

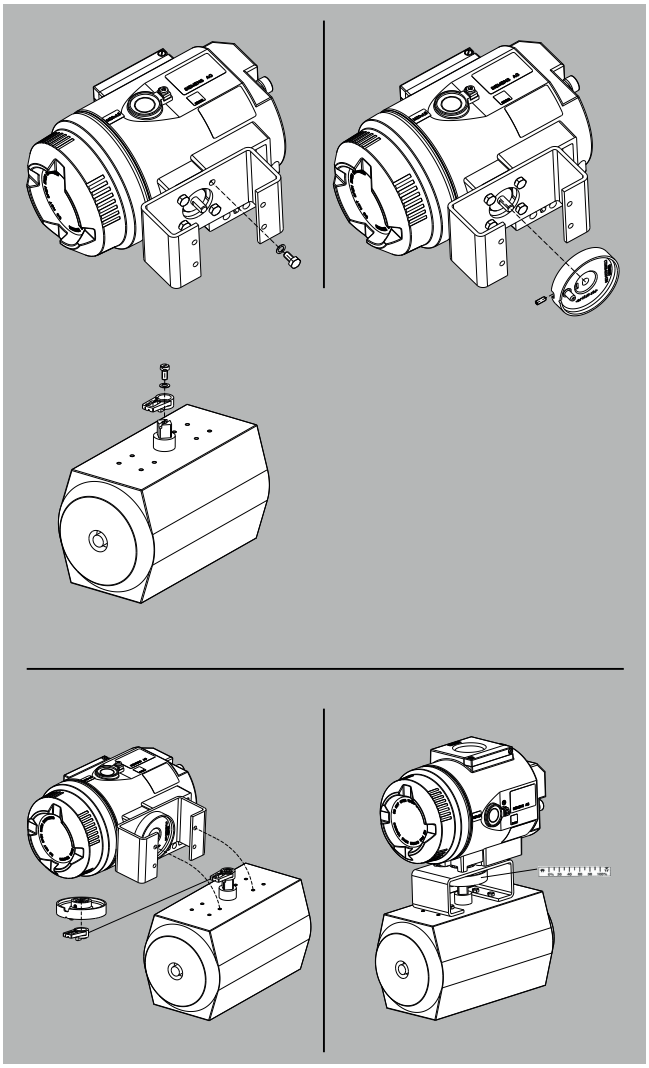

Mounting of SIPART PS2 in flameproof aluminum enclosure on part-turn actuators

## Dimensional drawings (continued)

***Booster mounted on positioner***

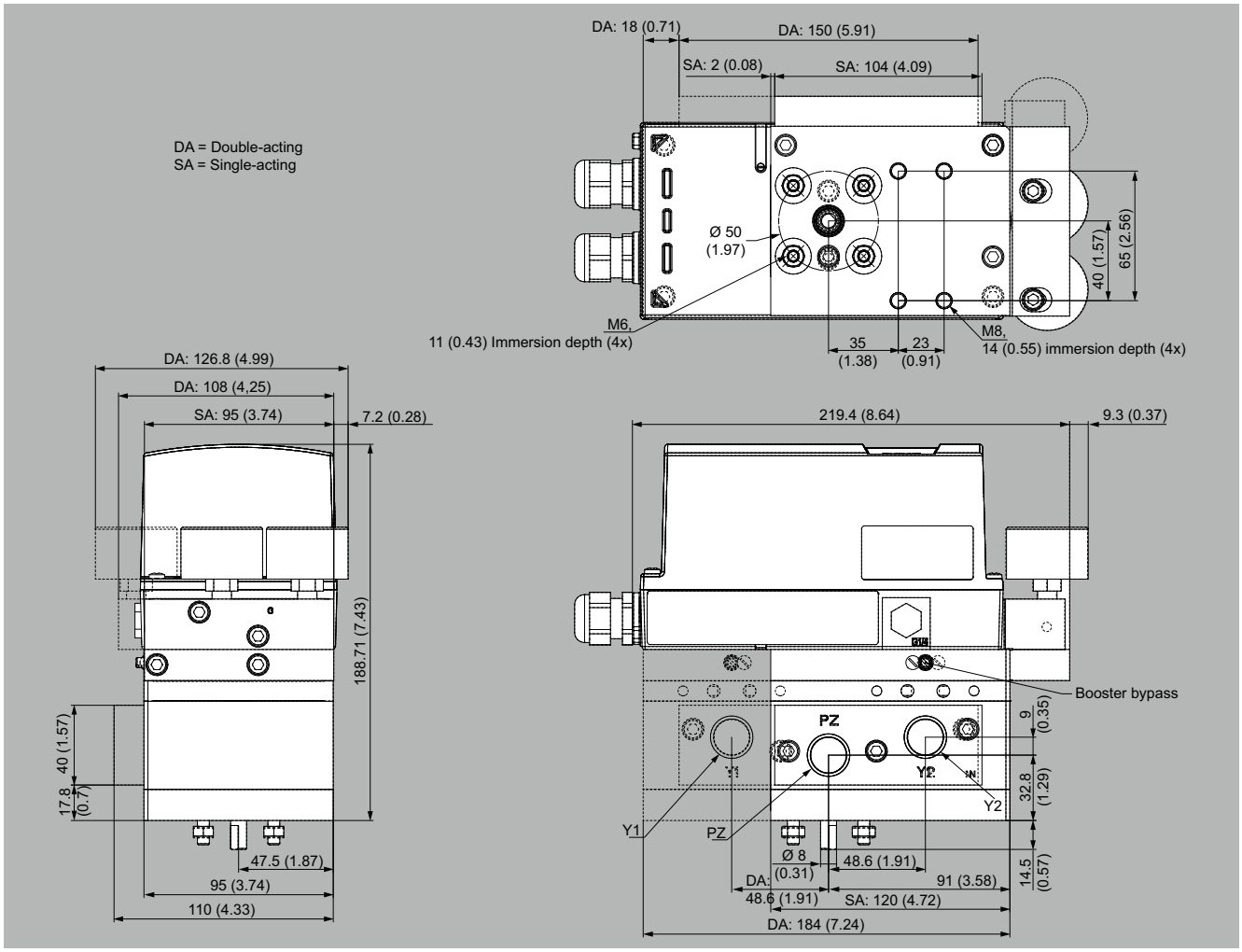


Booster mounted on positioner, dimensions in mm (inch)

## Dimensional drawings (continued)

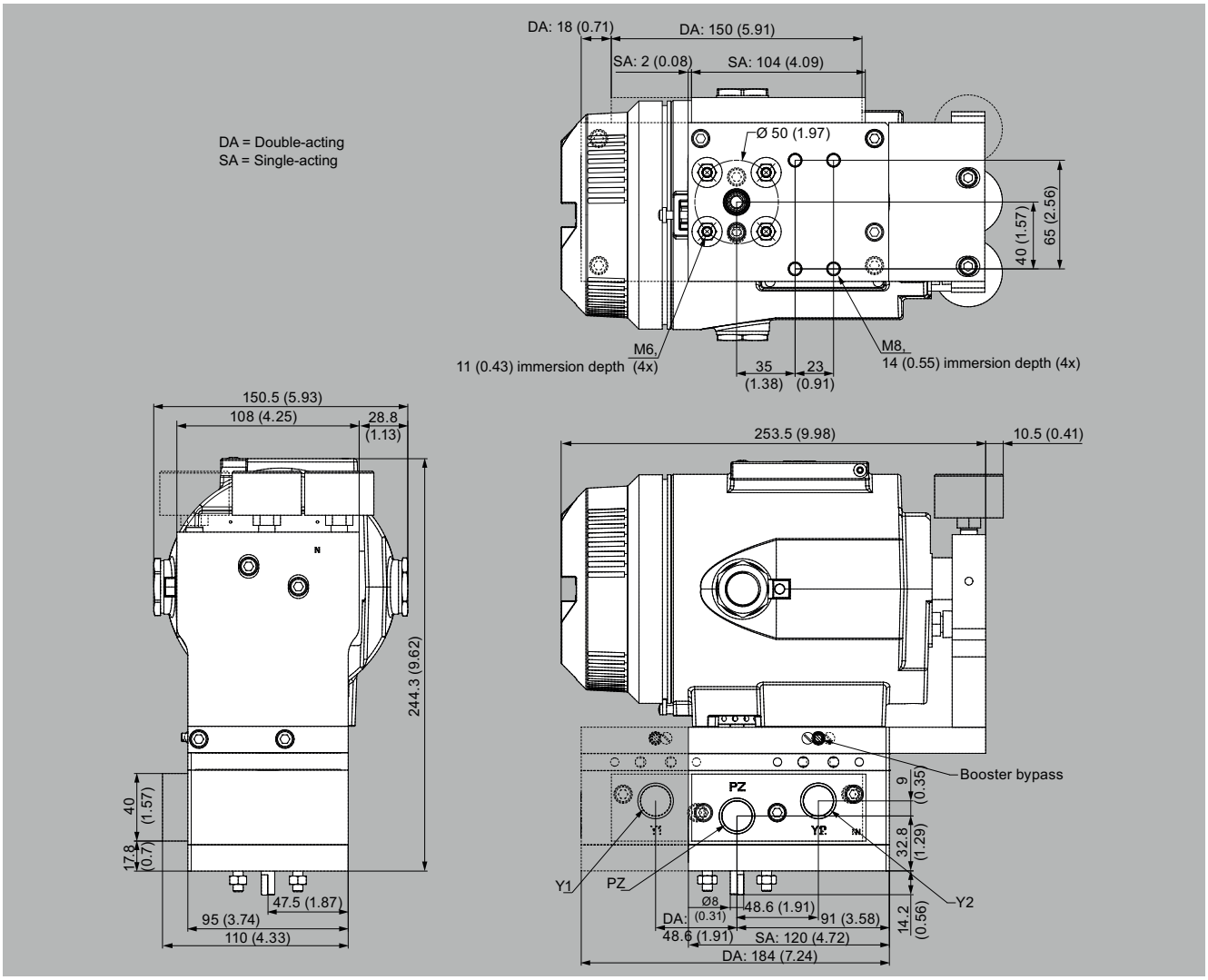


Booster mounted on positioner in a flameproof enclosure, dimensions in mm (inch)