FLUXER
FLOOD CONTROL

free of cavity & maintenance

TYPE ISO - STANDARD

Plug Valve with ISO-Flange
DN 15 - 600 / PN 10 - 40
NPS ½“ - 24“ / class 150 - 300



- **free of cavities**
- **maintenance free - self lubricating**
- **mounting-flange for actuators acc. to DIN ISO 5211**
- **easy accessible adjustment of the plug**
- **vacuum tight**
- **TA - Luft 2002 approval**
- **Firesafe - Design API 607 / ISO 10497**
- **DVGW - approval**

TYPE ISO - STANDARD

Design characteristics

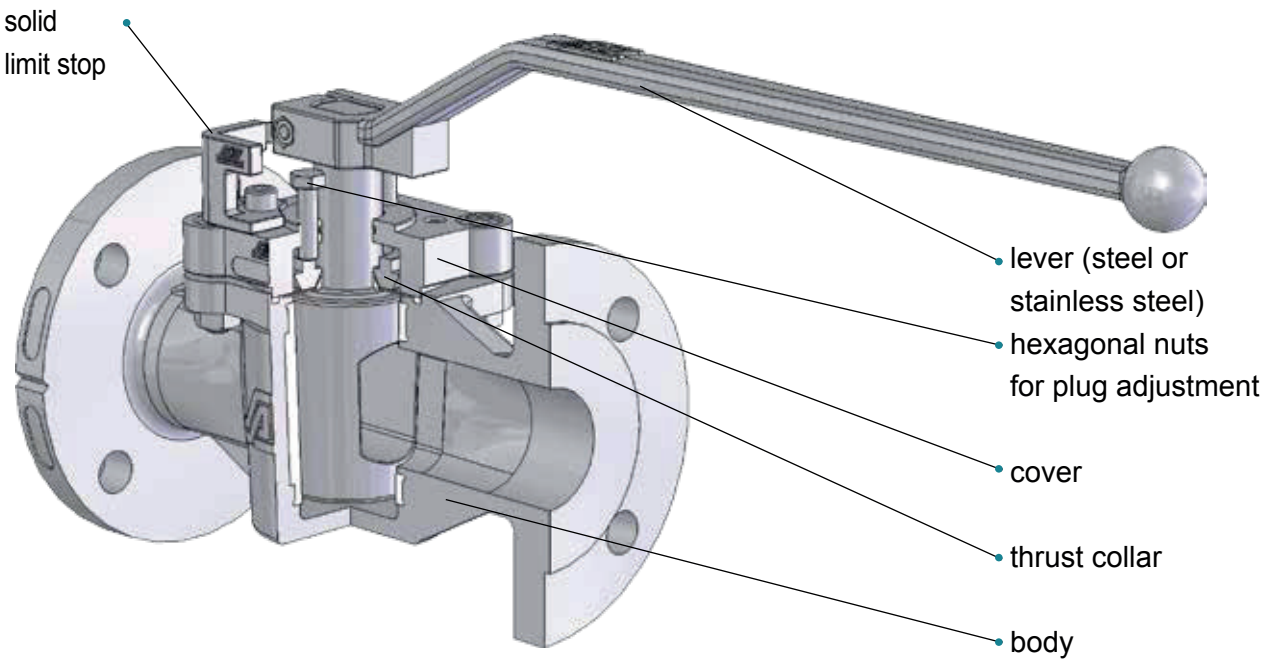

The main advantages of the plug valve Type **ISO-STANDARD:**

- strong mounting flange for actuators acc. DIN ISO 5211: Cover screws independent of actuator mounting!
- patented full cardanic dihedron coupling
- improved shaft and cover sealing including V-diaphragm, delta thrust collar and PTFE cover sealing ring.
- safety spindle packing (FSN/CASN) to prevent fugitive emission of aggressive and toxic media.

Materials

Standard body materials

- Ductile Iron EN-GJS-400-18 / (GGG 40.3) ASTM A395
- Carbon Steel 1.0619 (GS-C 25) / ASTM A216 WCB
- Stainless Steel 1.4408 / ASTM A351 CF8M

Special body materials

- Hastelloy B / C
- Inconel
- Monel
- Nickel
- Zirconium
- Titanium
- Tantalum

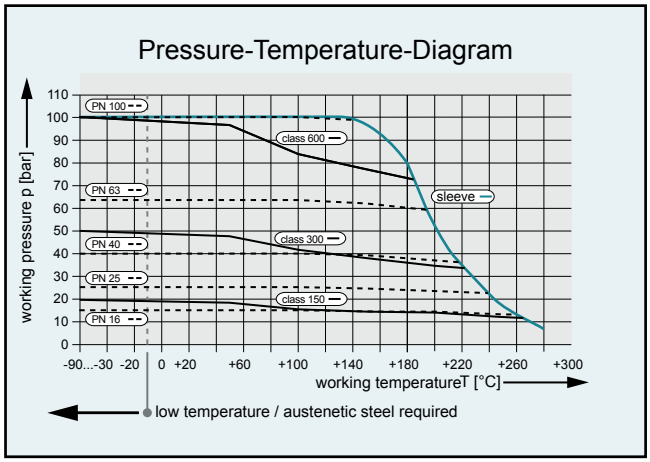

operating temperatures < -30°C and > 220 °C have to be checked and approved by AZ according to the operating conditions.

Other materials on request.
On enquiry / order: please state material for body and plug.

TYPE ISO - STANDARD

Flexible sealing selection through modular design

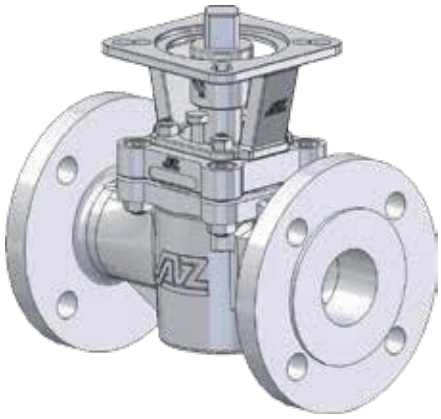

STD

Standard sealing for all major applications

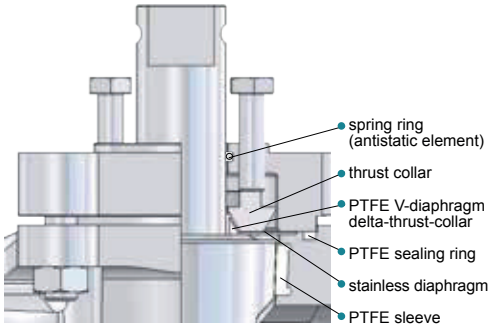

- primary sealing: PTFE sleeve
- secondary sealing: PTFE V-diaphragm with delta thrust collar

temperature range up to 230°C

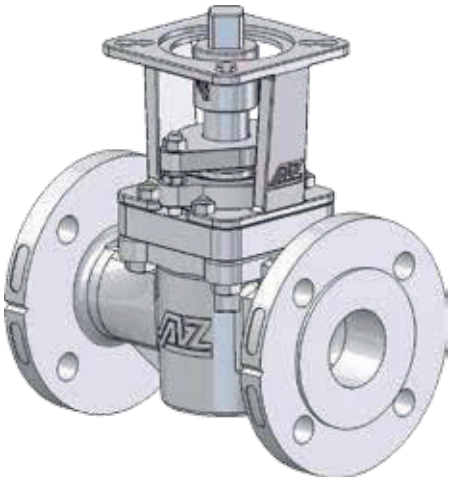

CASN | FSN

Safety sealing for fluctuating temperatures

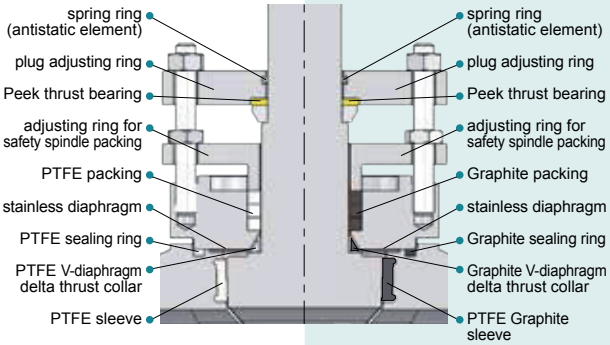

- primary sealing: PTFE sleeve
- secondary sealing: PTFE V-diaphragm with delta thrust collar
- tertiary sealing: triple safety spindle packing

temperature range up to 250°C

temperature range up to 300°C Fire-Safe Design (API 607)

CA | FS

Chemistry sealing to prevent fugitive emission of aggressive and toxic media

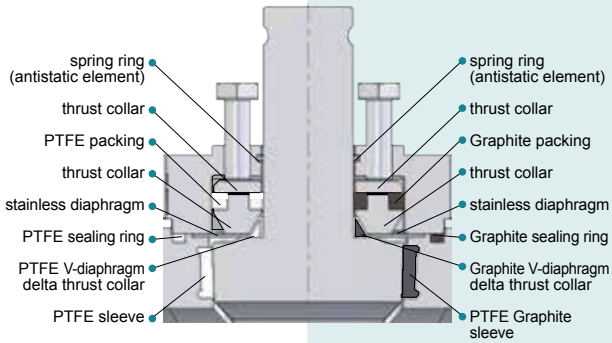

- primary sealing: PTFE sleeve
- secondary sealing: PTFE V-diaphragm with delta thrust collar
- tertiary sealing: spindle packing

temperature range up to 250°C

temperature range up to 300°C Fire-Safe Design (API 607)

CASN-SL | FSN-SL

Life loaded safety sealing for fluctuating temperatures

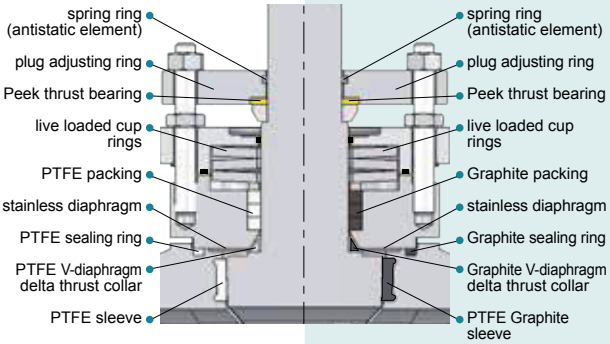

- primary sealing: PTFE-sleeve
- secondary sealing: PTFE V-diaphragm with delta-thrust-collar
- tertiary sealing: life loaded triple safety spindle packing

temperature range up to 250°C

temperature range up to 300°C Fire-Safe Design (API 607)

TYPE ISO - STANDARD

Design

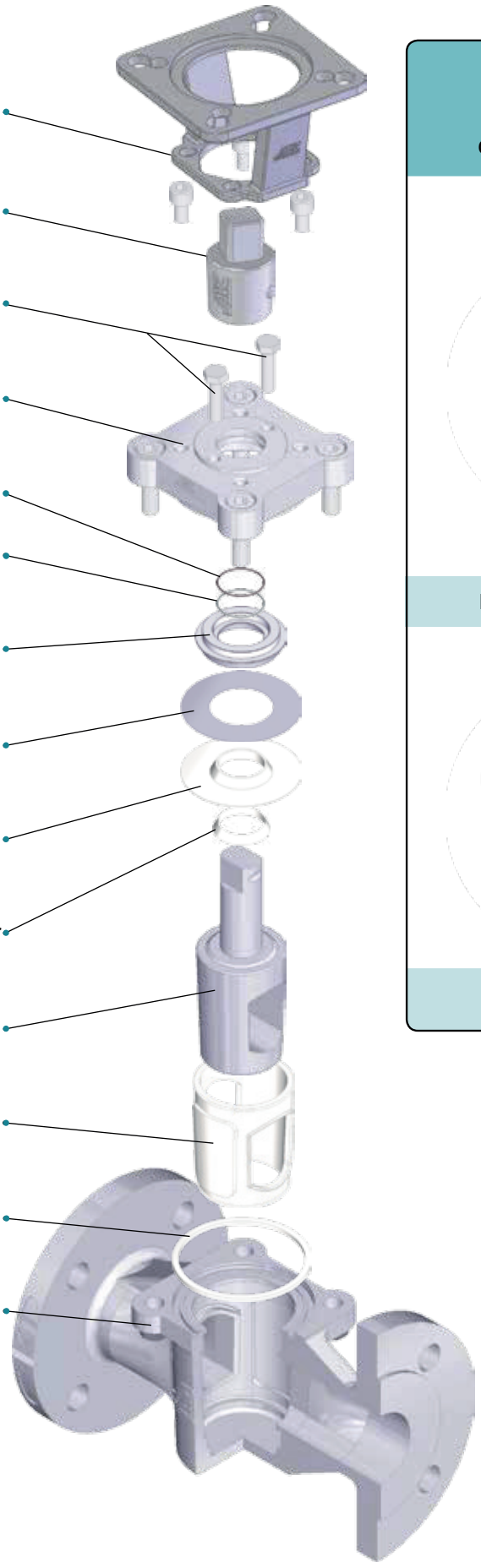

patented
cardanic **AZ-Coupling**

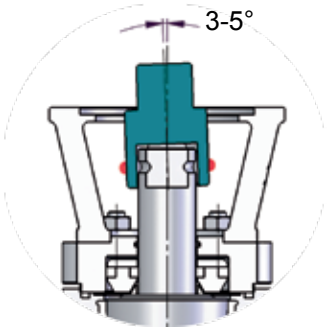

NO LATERAL FORCES!

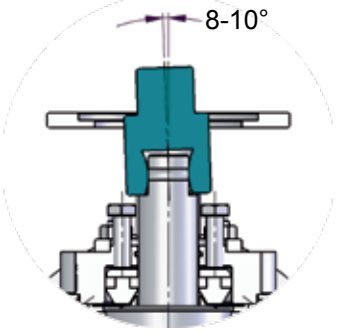

GUARANTY
for long life spam!

TYPE ISO - STANDARD

Dimensions DN 15 - 100S NPS ½“ - 4“S acc. to DIN / ASME

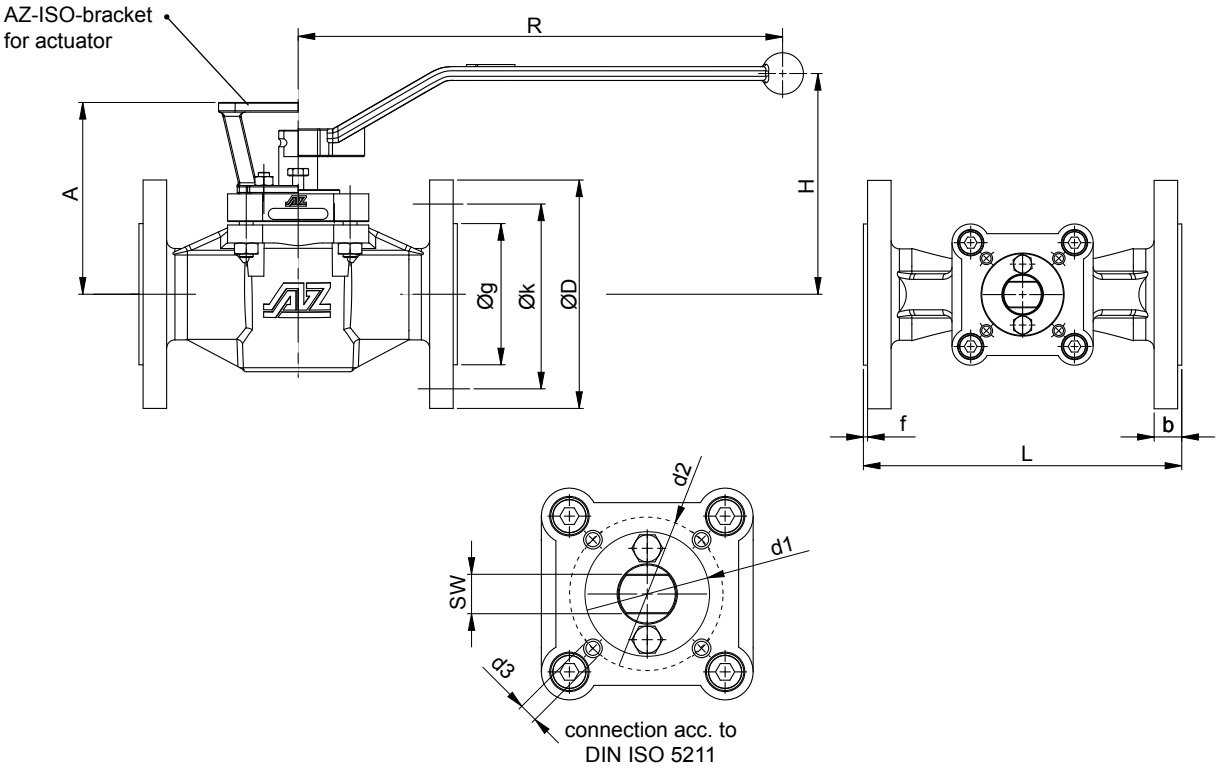

	DN	PN	L	øD	flange bore			øg	b	f	bracket / lever			flange DIN ISO 5211				US - UNC	dihe-dron	torque.* [Nm]	weight [kg]	K_{VS}-value [m³/h]	C_V-value [US.gal/min]
					øk	No.	ø				A	H	R	Type	d1	d2	d3	d3**					
DIN EN 1092/1 / 558-1	15	10-40	130	95	65	4	14	45	16	2	88	103	200	F05	35	50	M6	1/4“	11	30	3,8	12	14
	20	10-40	150	105	75	4	14	58	18	2	88	103	200	F05	35	50	M6	1/4“	11	30	4,3	13	15
	25	10-40	160	115	85	4	14	68	18	2	94	109	200	F05	35	50	M6	1/4“	11	30	4,9	25	29
	32	10-40	180	140	100	4	18	78	18	2	102	117	320	F07	55	70	M8	5/16“	14	70	8,6	46	53
	40	10-40	200	150	110	4	18	88	18	3	109	124	320	F07	55	70	M8	5/16“	14	80	9,6	85	98
	50	10-40	230	165	125	4	18	102	20	3	139	159	420	F07	55	70	M8	5/16“	17	120	13,9	126	146
	65	10-16 25-40	290	185	145	4 | 8 8	18	122	18 22	3	158	165	600	F10	70	102	M10	3/8“	22	200	19,3	262	302
	80	10-40	310	200	160	8	18	138	24	3	158	165	600	F10	70	102	M10	3/8“	22	200	21,4	275	317
	80S	10-40	310	200	160	8	18	138	24	3	173	180	600	F12	85	125	M12	1/2“	22	300	24,6	417	482
	100	10-16 25-40	350	220 235	180 190	8	18 22	158 162	20 24	3	158	165	600	F10	70	102	M10	3/8“	22	200	24,6	197	228
	100S	10-16 25-40	350	220 235	180 190	8	18 22	158 162	20 24	3	173	180	600	F12	85	125	M12	1/2“	22	300	28,9	582	673

	NPS	Class	L	øD	flange bore			øg	b	f	bracket / lever			flange DIN ISO 5211				US - UNC	dihe-dron	torque.* [Nm]	weight [kg]	K_{VS}-value [m³/h]	C_V-value [US.gal/min]
					øk	No.	ø				A	H	R	Type	d1	d2	d3	d3**					
ASME B 16.5 / 16.10	½“	150 300	108 140	90 95	60,3 66,7	4	15,7	34,9	10,0 14,7	2	88	103	200	F05	35	50	M6	1/4“	11	30	2,7 3,8	14 13	16 15
	¾“	150 300	117 152	100 115	69,9 82,5	4	15,7 19,1	42,9	10,9 16,3	2	88	103	200	F05	35	50	M6	1/4“	11	30	3,2 4,3	13 13	16 15
	1“	150 300	127 165	110 125	79,4 88,9	4	15,7 19,1	50,8	11,6 17,9	2	94	109	200	F05	35	50	M6	1/4“	11	30	3,5 4,9	24 26	28 31
	1¼“	150 300	140 178	115 135	88,9 98,4	4	15,7 19,1	63,5	13,2 19,5	2	102	117	320	F07	55	70	M8	5/16“	14	70	5,4 8,6	46	53
	1½“	150 300	165 190	125 155	98,4 114,3	4	15,7 22,3	73,0	14,7 21,1	2	109	124	320	F07	55	70	M8	5/16“	14	80	7 9,6	78 79	90 92
	2“	150 300	178 216	150 165	120,7 127,0	4 8	19,1 19,1	92,1	16,3 22,7	2	139	159	420	F07	55	70	M8	5/16“	17	120	11,8 13,9	137 139	158 161
	2½“	150 300	190 241	180 190	139,7 149,3	4 8	19,1 22,3	104,8	17,9 25,9	2	158	165	600	F10	70	102	M10	3/8“	22	200	15,5 19,3	236	273
	3“	150 300	203 282	190 210	152,4 168,3	4 8	19,1 22,3	127	19,5 29,0	2	158	165	600	F10	70	102	M10	3/8“	22	200	18,2 21,4	225 228	260 264
	4“	150 300	229 305	230 255	190,5 200,0	8	19,1 22,3	157,2	24,3 32,2	2	158	165	600	F10	70	102	M10	3/8“	22	200	20,3 24,6	169 198	195 229
	4“S	150 300	229 305	230 255	190,5 200,0	8	19,1 22,3	157,2	24,3 32,2	2	173	180	600	F12	85	125	M12	1/2“	22	300	24,6 28,9	523 542	604 627

* inclusive 100% safety factor for actuators

** US -DESIGN: BOLTINGS / NUTS acc. to ASTM / UNC ANSI B1.1

TYPE ISO - STANDARD

Dimensions DN 125 - 600 NPS 5“ - 24“ acc. to DIN / ASME

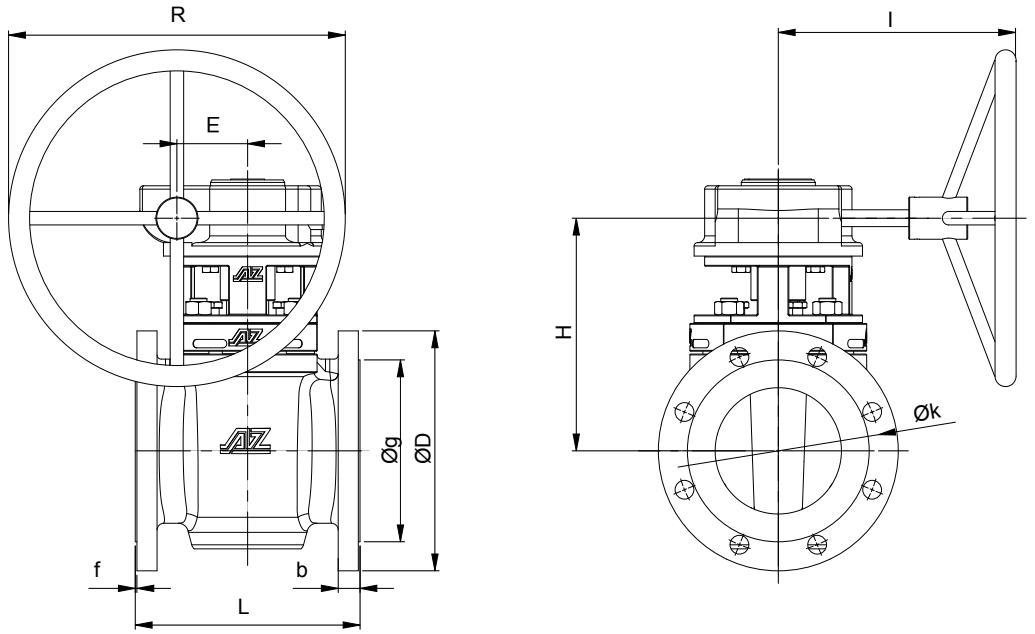

DIN EN 1092/1 / 588-1

DN	PN	L	øD	flange bore øk	flange bore No.	flange bore ø	øg	b	f	gear (Pro-Gear) E	R	H	I	Typ	flange DIN ISO 5211 Typ	d1	d2	d3	US - UNC d3**	dihedron	torque.* [Nm]	weight [kg]	K_{VS}-value [m³/h]	C_V-value [US.gal/min]
125	10-16	325	250	210	8	18	188	22	3	84	400	277	290	Q1500-S	F16	130	165	M20	3/4“	36	900	67	865	1000
	25-40		270	220		26	188	26														71		
150	10-16	350	285	240	8	22	212	22	3	84	400	277	290	Q1500-S	F16	130	165	M20	3/4“	36	900	77	875	1011
	25-40		300	250		26	218	28														79		
200	10-16	400	340	295	8/12	22	268	24	3	96,5	600	320	350	Q2000-S	F16	130	165	M20	3/4“	36	1200	108	1770	2047
	25 40		360 375	310 320	12	26 30	278 285	30 34														119		
250	10 16	450	395 405	350 355	12	22 26	320	26	3	117,5	600	328	465	Q5000-S	F16	130	165	M20	3/4“	36	1500	177	2788	3223
	25 40		425 450	370 385		30 33	335 345	32 38														235		
300	10 16	500	445 460	400 410	12	22 26	370 378	26 28	4	117,5	600	366	465	Q5000-S	F16	130	165	M20	3/4“	36	2600	230	2618	3027
	25 40		485 515	430 450	16	30 33	395 410	34 42														249		
350	10 16	550	505 520	460 470	12	22 26	430 438	26 30	4	137,5	600	460	465	Q6500-S	F25	200	254	M16	5/8“	46	5500	395	5070	5861
	25 40		555 580	490 510	16	33 36	450 465	38 46														468		
400	10 16	600	565 580	515 525	16	26 30	482 490	26 32	4	137,5	600	460	465	Q6500-S	F25	200	254	M16	5/8“	46	5500	411	4694	5426
	25 40		620 660	550 585		36 39	505 535	40 50														525		
450	10 16	650	615 640	565 585	20	26 30	532 550	28 36	4	180	600	485	520	Q12000-S	F30	230	298	M20	3/4“	55	6400	611	9587	11084
	25 40		670 685	600 610		36 39	555 560	46 57														730		
500	10 16	700	670 715	620 650	20	26 33	585 610	28 38	4	180	600	510	520	Q12000-S	F30	230	298	M20	3/4“	55	7500	655	10260	11862
	25 40		730 755	660 670		36 42	615 615	48 57														744		
600	10 16	800	780 840	725 770	20	30 36	685 725	30 47	5	180	600	510	520	Q12000-S	F30	230	298	M20	3/4“	55	7500	681	7980	9226
	25 40		845 890	770 795		39 48	720 735	58 72														863		

ASME B 16.5 / 16.10

NPS	Class	L	øD	flange bore øk	flange bore No.	flange bore ø	øg	b	f	gear (Pro-Gear) E	R	H	I	Typ	flange DIN ISO 5211 Typ	d1	d2	d3	US - UNC d3**	dihedron	torque.* [Nm]	weight [kg]	K_{VS}-value [m³/h]	C_V-value [US.gal/min]
5“	150	254	255	215,9	8	22,3	185,7	24,3	2	84	400	277	290	Q1500-S	F16	130	165	M20	3/4“	27	900	55		
	300	325	280	235				35,4														71		
6“	150	267	280	241,3	8	22,3	215,9	25,9	2	84	400	277	290	Q1500-S	F16	130	165	M20	3/4“	27	900	60	738	853
	300	403	320	269,9	12			37,0														70	775	896
8“	150	292	345	298,5	8	22,4	269,9	29,0	2	96,5	600	320	350	Q2000-S	F16	130	165	M20	3/4“	36	1200	94	1517	1754
	300	419	380	330,2	12	25,4		41,7														125	1978	2286
10“	150	330	405	362	12	25,4	323,8	30,6	2	117,5	600	328	465	Q5000-S	F16	130	165	M20	3/4“	36	1500	127	2239	2589
	300	457	445	387,4	16	28,4		48,1														160	2382	2754
12“	150	356	485	431,8	12	25,4	381	32,2	2	117,5	600	366	465	Q5000-S	F16	130	165	M20	3/4“	36	2600	153	1904	2202
	300	502	520	450,8	16	31,7		51,3														170	1925	2225
14“	150	686	535	476,3	12	28,4	412,8	35,4	2	137,5	600	460	465	Q6500-S	F25	200	254	M16	5/8“	46	5500	180	2448	2830
	300	762	585	514,4	20	31,7		54,4														210	2394	2768
16“	150	600	595	539,8	16	28,4	469,9	37,0	2	137,5	600	460	465	Q6500-S	F25	200	254	M16	5/8“	46	5500	246	5131	5932
	300		650	571,5	20	35		57,6														305	4618	5339
18“	150	864	635	577,9	16	31,8	533,4	40,1	2	180	600	485	520	Q12000-S	F30	230	298	M20	3/4“	55	6400	627	12427	14367
	300	914	710	628,6	24	35		60,8														763		
20“	150	914	700	635	20	31,8	584,2	43,3	2	180	600	510	520	Q12000-S	F30	230	298	M20	3/4“	55	7500	698	11728	13559
	300	991	775	685,8	24	35		64														860	11841	13689
24“	150	1067	815	749,3	20	35,1	692,2	48,1	2	180	600	510	520	Q12000-S	F30	230	298	M20	3/4“	55	7500	825	9863	11402
	300	1143	915	812,8	24	41,1		70,3														1070	9509	10993

* inclusive 100% safety factor for actuators

** US -DESIGN: BOLTINGS / NUTS acc. to ASTM / UNC ANSI B1.1