

Activator

BT115A

- For right and left rotating drives with 180° rotational motion
- Four fixed actuating lugs, offset by 90°

Activator for F31 series

Dimensions

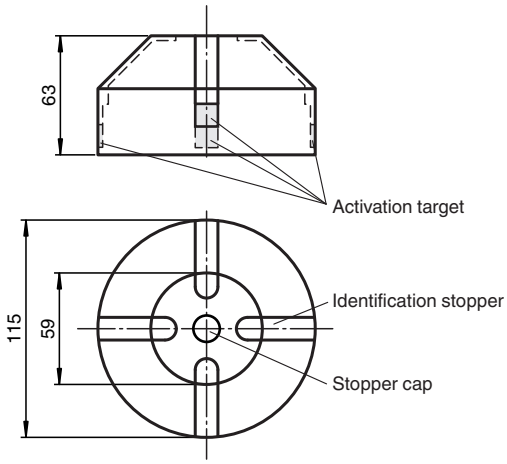

Technical Data

General specifications		
Ring diameter		max. 110 mm
Spring ring height		max. 7 mm
Ambient conditions		
Ambient temperature		-25 ... 70 °C (-13 ... 158 °F)
Mechanical specifications		
Shaft diameter		< 90 mm
Shaft height		30 mm and 50 mm
Mounting hole pattern		30 x 130 mm
Material		
Housing		Mounting component: PA
Spacer disk		PA (2 units, 10 mm strong)
Stopper cap		PE (1 unit black)
Identification stopper		PA (2 units yellow, 2 units black)
Mounting screw		for activator: 1.4305 / AISI 303 (1 piece M6 x 25) for sensors - F31: 1.4305 / AISI 303 (4 pieces M5 x 16) (2 pieces M5 x 12)
Activation target		Stainless steel 1.4305 / AISI 303 (integrated)
Mass		120 g
Tightening torque, fastening screws		1.5 Nm

Release date: 2021-04-13

Matching System Components

	NBN3-F31-E8-K
	NBN3-F31-E8-K-K
	NBN3-F31-E8-V1
	NBN3-F31-E8-V1-Y7011-3680
	NBN3-F31-E8-V1-FESTO
	NBN3-F31-E8-V16-V15
	NBN3-F31K-E8
	NBN3-F31K-E8-K
	NBN3-F31K-E8-K-FESTO
	NBN3-F31K-E8-B13-S-BRAY
	NBN3-F31K-E8-V1-V1
	NBN3-F31K-Z8
	NBN3-F31K-Z8-K-FESTO
	NBN3-F31K-Z8-V1-V1
	NBN3-F31K2-E8-B13-S
	NBN3-F31K2-E8-B33-S
	NBN3-F31K2-E8-B43-S
	NBN3-F31K2M-E8-B13-S
	NBN3-F31K2M-E8-B23-S
	NBN3-F31K2M-E8-B33-S
	NBN3-F31K2M-Z8L-B43-S
	NBN3-F31K2M-E8-B43-S
	NBN3-F31K2M-Z8L-B13-S

Matching System Components

	NBN3-F31K2M-Z8L-B23-S	
	NCN3-F31K2M-N4-B23-S	
	NBN3-F31K2M-Z8L-B33-S	
	NBN3-F31K2-Z8L-B13-S-Y300073	
	NBN3-F31K2-Z8L-B13-S-Y292890	
	NBN3-F31K2-Z8L-B13-S	
	NBN3-F31K2-Z8L-B33-S	
	NBN3-F31-U8-K	
	NBN3-F31-Z8-K	
	NBN3-F31-Z8-K-K	
	NBN3-F31-Z8-V1-FESTO	
	NCN3-F31-B3B-V1-V1-FESTO	Valve positioner and valve control module
	NCN3-F31-B3B-V1-V1	Valve positioner and valve control module
	NCN3-F31K-B3B-B31	Valve positioner and valve control module
	NCN3-F31K-N4	
	NCN3-F31K2-N4-B13-S	
	NCN3-F31K2-N4-B33-S	
	NCN3-F31K2M-N4-B13-S	
	NCN3-F31K2-N5-B13-S	
	NCN3-F31K2-N5-B33-S	
	NCN3-F31K-N4-B13	

Matching System Components

	NCN3-F31K-N4-B13-S
	NCN3-F31K-N4-K-FESTO
	NCN3-F31K-N4-K
	NCN3-F31K-N4-K-S
	NCN3-F31K-N4-S
	NCN3-F31K-N4-V1-V1
	NCN3-F31K-N5-K
	NCN3-F31-N4-K
	NCN3-F31-N4-K-K
	NCN3-F31-N4-V1
	NCN3-F31-N4-V1-FESTO
	NBN3-F31K2M-E8-B13-S-3G-3D
	NBN3-F31K2M-Z8L-B13-S-3G-3D
	NBN3-F31K2M-Z8L-B13-S-3G-3D-Y
	NBN3-F31K2M-Z8L-B13-S-3G-3D-Y

Function

The activator consists of a conductive plastic material which prevents static charging and allows installation in potentially explosive environments.