TECHNICAL DOCUMENT

FLUXER
FLOOD CONTROL

Inductive sensor

NCN3-F31K-N4-K

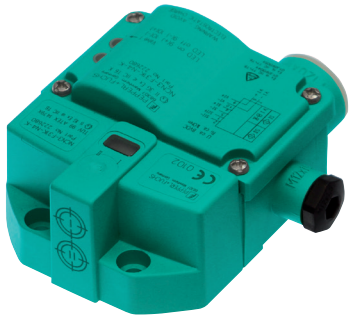

- Direct mounting on standard actuators
- Fixed setting
- EC-Type Examination Certificate TÜV99 ATEX 1479X
- Usable up to SIL 2 acc. to IEC 61508
- LEDs for switching state of sensor and solenoid valve
- Valve LEDs disconnectable
- ATEX &IECEX certifications

Dimensions

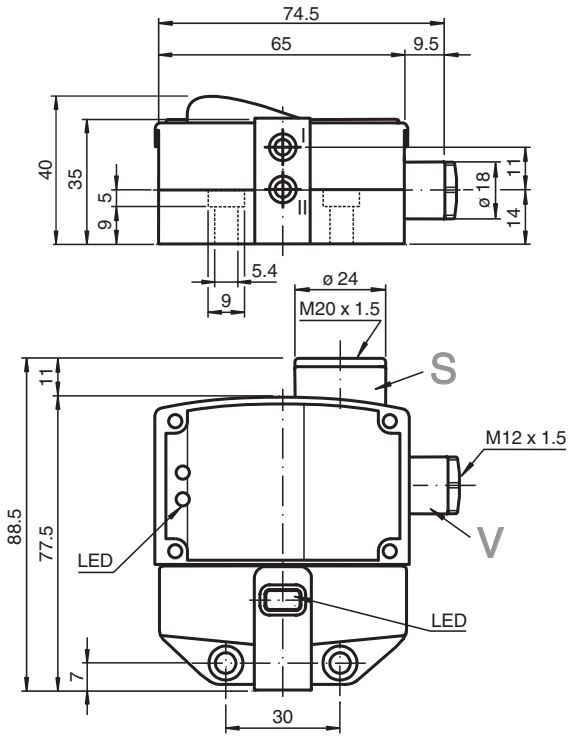

Technical Data

General specifications		
Switching function		2 x normally closed (NC)
Output type		NAMUR
Rated operating distance	s_n	3 mm
Installation		flush mountable
Assured operating distance	s_a	0 ... 2.4 mm
Actual operating distance	s_r	2.7 ... 3.3 mm typ.
Actuating element		Stainless steel 1.4305 / AISI 303 8.5 mm x 8.5 mm x 0.5 mm
Reduction factor r_{Al}		0.5

2023-01-25

Technical Data

Reduction factor r_{Cu}		0.4
Reduction factor r_{304}		1
Reduction factor r_{St37}		1.3
Reduction factor r_{Brass}		0.6
Output type		2-wire
Nominal ratings		
Nominal voltage	U_o	8.2 V (R_i approx. 1 kΩ)
Switching frequency	f	0 ... 3 kHz
Hysteresis	H	typ. 5 %
Reverse polarity protection		reverse polarity protected
Short-circuit protection		yes
Suitable for 2:1 technology		yes , Reverse polarity protection diode not required
Current consumption		
Measuring plate not detected		≥ 3 mA
Measuring plate detected		≤ 1 mA
Time delay before availability	t_v	≤ 1.1 ms
Switching state indicator		LED, yellow
Valve status indicator		LED, yellow
Functional safety related parameters		
Safety Integrity Level (SIL)		SIL 2
$MTTF_d$		1470 a
Mission Time (T_M)		20 a
Diagnostic Coverage (DC)		0 %
Valve circuit		
Voltage		max. 32 V DC
Current		max. 240 mA
Short-circuit protection		no
Reverse polarity protection		yes, with reversed output LED is out of function, therfore more power for solenoid valve
Compliance with standards and directives		
Standard conformity		
NAMUR		EN 60947-5-6:2000 IEC 60947-5-6:1999
Electromagnetic compatibility		NE 21:2007
Standards		EN 60947-5-2:2007 EN 60947-5-2/A1:2012 IEC 60947-5-2:2007 IEC 60947-5-2 AMD 1:2012
Approvals and certificates		
IECEx approval		
Equipment protection level Ga		IECEx TUN 17.0021X
Equipment protection level Gb		IECEx TUN 17.0021X
Equipment protection level Mb		IECEx TUN 17.0021X
ATEX approval		
Equipment protection level Ga		TÜV 99 ATEX 1479 X
Equipment protection level Gb		TÜV 99 ATEX 1479 X
Equipment protection level Gc (ic)		PF13CERT2895 X
UL approval		cULus Listed, General Purpose
Ordinary Location		E87056
Hazardous Location		E501628
Control drawing		116-0456
CSA approval		cCSAus Listed, General Purpose
CCC approval		
Hazardous Location		2020322315002262
NEPSI approval		

Technical Data

NEPSI certificate	GYJ19.1410X
Ambient conditions	
Ambient temperature	-25 ... 100 °C (-13 ... 212 °F)
Storage temperature	-40 ... 100 °C (-40 ... 212 °F)
Mechanical specifications	
Connection (system side)	Cage tension spring terminals Stripped length 7 mm M20 x 1.5 cable gland usable thread length 11.5 mm screw-in depth max. 11.5 mm
Core cross section (system side)	1.5/2.5 mm² flexible/rigid
Connection (valve side)	Cage tension spring terminals
Core cross section (valve side)	1.5/2.5 mm² flexible/rigid
Housing material	PBT
Sensing face	PBT
Degree of protection	IP66 / IP67
Tightening torque, fastening screws	4 Nm ... 5 Nm
Tightening torque, housing screws	1 Nm
Tightening torque, cable gland	M20 x 1.5 ; max. 7 Nm M12 x 1.5 ; max. 1.5 Nm
Note	LED switch-off
General information	
Note	Inductive sensors for position feedback of standard drives with terminal identification / terminal assignment in accordance with the former DIN 45140 T1 available on request. Ask your contact person at Pepperl+Fuchs.
Use in the hazardous area	see instruction manuals

Connection

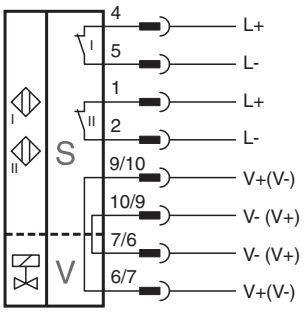

Additional Information

Interruption of LED:
In the case of a polarity reversal of the valve circuit connection/s, the valve status display does not function, i.e. such that low power valves can (also) be connected.

Accessories

	**BT65A**	Activator for F31 series
	**BT65X**	Activator for F31 series

Installation

Note
The connections to this sensor are sealed with stopping plugs to protect against dirt and moisture. If not all of the connections are used in your application, then seal the remaining stopping plugs on the sensor permanently or check during initial installation and when performing regular maintenance work that the stopping plugs are secure and impermeable. If necessary, tighten the stopping plugs to a torque of 1 Nm.