TECHNICAL DOCUMENT

FLUXER
FLOOD CONTROL

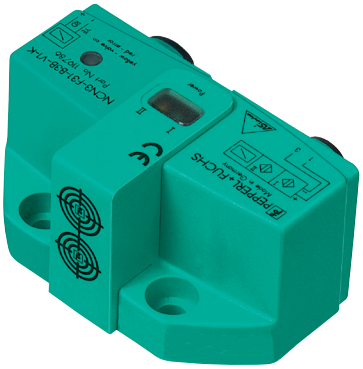

# Inductive sensor

## NCN3-F31-B3B-V1-V1

- Direct mounting on standard actuators
- A/B node with extended addressing possibility for up to 62 nodes
- Mode of operation, programmable
- Degree of protection IP67
- Communication monitoring, turn-off
- Lead breakage and short-circuit monitoring of the valve

Valve positioner and valve control module

## Dimensions

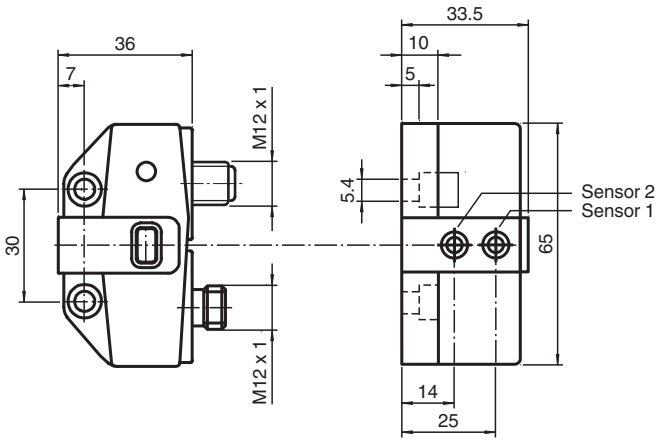


Drawing without actuator

## Technical Data

| | | |
|---|---|---|
| **General specifications** | | |
| Switching function | | Normally open/closed (NO/NC) programmable |
| Output type | | AS-Interface |
| Rated operating distance | $s_n$ | 3 mm |
| Installation | | flush mountable |
| Assured operating distance | $s_a$ | 0 ... 2.43 mm |
| Reduction factor $r_{Al}$ | | 0.5 |
| Reduction factor $r_{Cu}$ | | 0.45 |
| Reduction factor $r_{304}$ | | 1 |
| Reduction factor $r_{St37}$ | | 1.2 |
| Node type | | A/B node |
| AS-Interface specification | | V3.0 |
| Required gateway specification | | ≥ V2.1 |
| **Nominal ratings** | | |
| Operating voltage | $U_B$ | 26.5 ... 31.9 V via AS-i bus system |
| Switching frequency | f | 0 ... 100 Hz |
| No-load supply current | $I_0$ | ≤ 35 mA |

2022-05-23

## Technical Data

| | | |
|---|---|---|
| **Functional safety related parameters** | | |
| $MTTF_d$ | | 842 a |
| Mission Time ($T_M$) | | 20 a |
| Diagnostic Coverage (DC) | | 0 % |
| **Indicators/operating means** | | |
| LED PWR | | AS-Interface voltage; LED green |
| LED IN | | switching state (input); LED yellow |
| LED OUT | | binary LED yellow/red<br>yellow: switching state<br>red: lead breakage/short-circuit |
| **Electrical specifications** | | |
| Rated operating voltage | $U_e$ | 26.5 ... 31.6 V from AS-Interface |
| Rated operating current | $I_e$ | 100 mA |
| **Compliance with standards and directives** | | |
| Standard conformity | | |
| Electromagnetic compatibility | | EN 50295:1999-10 |
| Standards | | EN 60947-5-2:2007<br>EN 60947-5-2/A1:2012<br>IEC 60947-5-2:2007<br>IEC 60947-5-2 AMD 1:2012 |
| **Approvals and certificates** | | |
| UL approval | | cULus Listed, General Purpose |
| CSA approval | | cCSAus Listed, General Purpose |
| CCC approval | | CCC approval / marking not required for products rated ≤36 V |
| **Ambient conditions** | | |
| Ambient temperature | | -25 ... 70 °C (-13 ... 158 °F) |
| **Mechanical specifications** | | |
| Connection (system side) | | 4-pin, M12 x 1 connector |
| Connection (valve side) | | socket connector , M12 x 1 , 4-pin |
| Connector housing | | metal |
| Housing material | | PBT |
| Degree of protection | | IP67 |
| Tightening torque, fastening screws | | 4 Nm ... 5 Nm |
| Note | | valve voltage limited to 26,4 V max.; valve power 2,5 W max. |

## Connection

B3B-V1-V1-Y

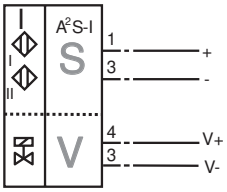


## Connection Assignment

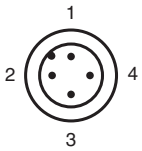

## Assembly

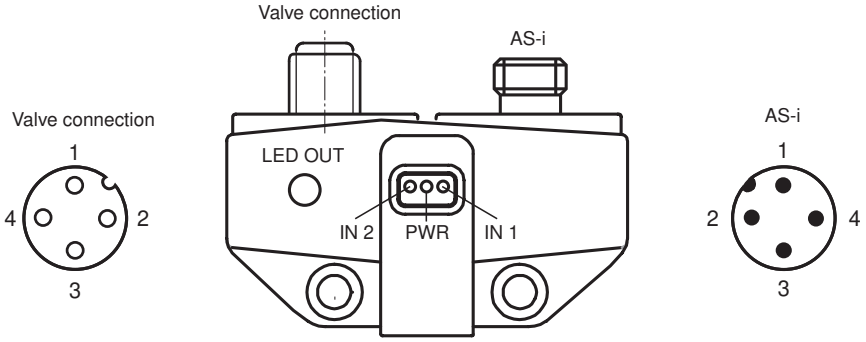


## Additional Information

Programming Instructions

| | |
|---|---|
| Address | 00 preset, alterable via Busmaster or progrmming units |
| IO-code | D |
| ID-code | A |
| ID1-code | 7 |
| ID2-code | E |

Data bit

| Bit | Function |
|---|---|
| D0 | valve status (0=valve OFF, 1=valve ON) |
| D1 | valve fault [1] (0=lead breakage/short circuit; 1=no fault) |
| D2 | switch output sensor 1 [2] (0=damped; 1=undamped) |
| D3 | switch output sensor 2 [2] (0=damped; 1=undamped) |

Parameter bit

| Bit | Function |
|---|---|
| P0 | Watchdog (0=inactive; 1=active) [3] |
| P1 | switching element function sensor II [4] 0=NO; 1= NC) |
| P2 | switching element function sensor I [4] 0=NO; 1= NC) |
| P3 | not used |

1) Verification only with actuated valve (D0=1)

2) Applies to NC function (P1/P2=1; preset), with NO function (P1/P2=0) reversed characteristics

3) Watchdog active: valve voltage drops with the occurrence of an AS-I communication fault

## Mounting

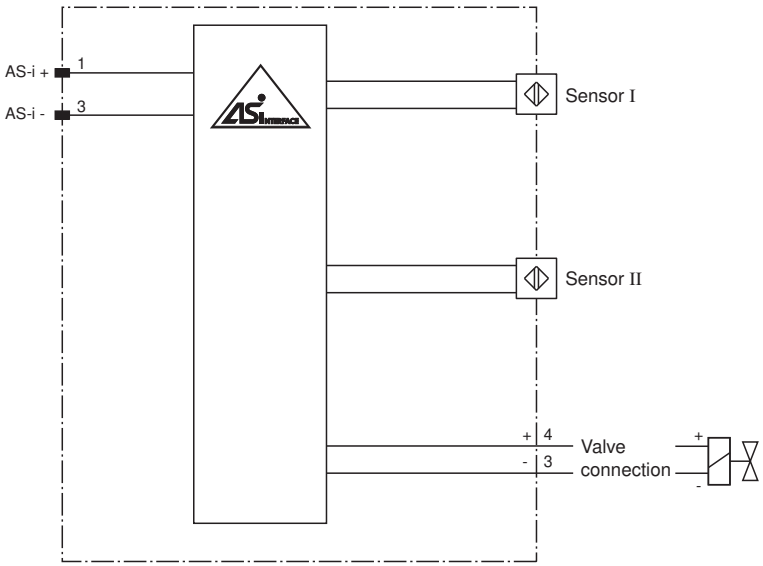


## Matching System Components

| | | |
|---|---|---|
|  | **BT115A** | Activator for F31 series |
|  | **BT115X** | Activator for F31 series |

## Accessories

| | | |
|---|---|---|
|  | **BT65B** | Activator for F31 series |
|  | **BT115B** | Activator for F31 series |
|  | **V1-W-2M-PUR** | Female cordset single-ended M12 angled A-coded, 4-pin, PUR cable grey |
|  | **V1-G-2M-PUR** | Female cordset single-ended M12 straight A-coded, 4-pin, PUR cable grey |
|  | **BT65A** | Activator for F31 series |
|  | **BT65X** | Activator for F31 series |

## Function

The NCN3-F31-B3B-V1-V1 is an inductive dual sensor used to indicate the valve positioning of actuators. The dual sensor is mounted directly on the actuator using two screws. Additional adjustment is not necessary.

A switch box M12 x 1 on the sensor is used directly for the valve controls. The NCN3-F31-B3B-V1-V1 is connected via a M12x1 screw fixing to the bus line. This makes it possible to transmit both the switch signal for the valve and the messages of the sensors via AS-Interface. They are both powered directly through the bus cable. Moreover, the valve is monitored for lead breakage and short circuit. The D1 data bit monitors the fault signal.

The sensors can be programmed as normally closed and normally open contacts (parameter bit P1 and P2). If there are no communications on the bus cable, the valve is automatically de-energised. This communication monitoring can be turned off via the parameter bit P0.

The current switching states are displayed by means of yellow LEDs.