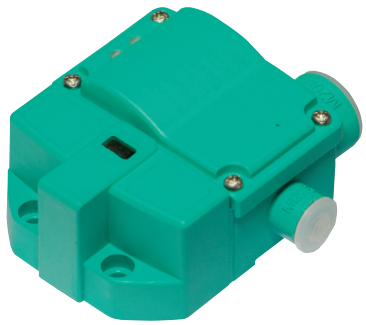

Inductive sensor

NBN3-F31K-Z8-K

- Direct mounting on standard actuators
- Fixed setting
- LEDs for switching state of sensor and solenoid valve

Dimensions

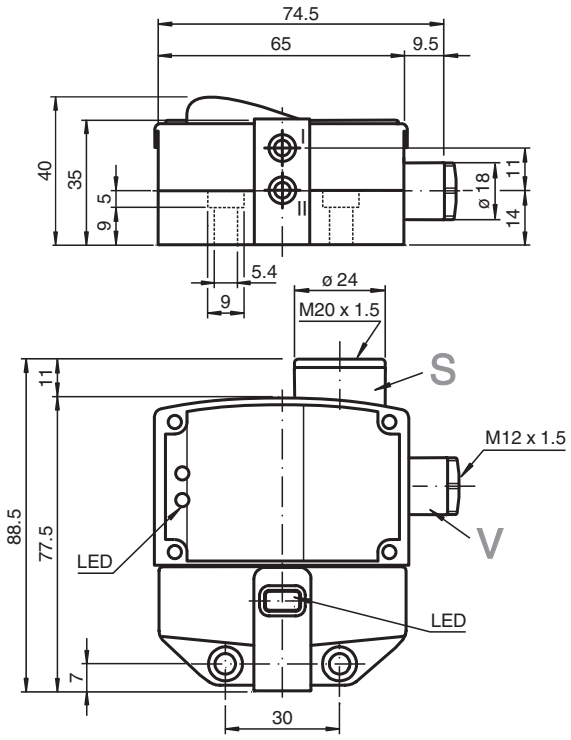

Technical Data

General specifications		
Switching function		2 x normally open (NO)
Output type		Two-wire
Rated operating distance	s_n	3 mm
Installation		flush mountable
Output polarity		DC
Assured operating distance	s_a	0 ... 2.43 mm
Actual operating distance	s_r	2.7 ... 3.3 mm typ. 3 mm
Reduction factor r_{Al}		0.5
Reduction factor r_{Cu}		0.4

Technical Data

Reduction factor r_{304}		1
Reduction factor r_{St37}		1.1
Output type		4-wire
Nominal ratings		
Operating voltage	U_B	6 ... 60 V DC
Switching frequency	f	0 ... 500 Hz
Hysteresis	H	typ. 5 %
Reverse polarity protection		reverse polarity tolerant
Short-circuit protection		pulsing
Voltage drop	U_d	≤ 5.5 V
Operating current	I_L	4 ... 100 mA
Lowest operating current	I_m	4 mA
Off-state current	I_r	0.5 ... 0.9 mA typ. 0.65 mA
Time delay before availability	t_v	≤ 40 ms
Switching state indicator		LED, yellow
Valve status indicator		LED, yellow
Limit data		
Tightening torque, fastening screws		0.4 Nm
Functional safety related parameters		
$MTTF_d$		570 a
Mission Time (T_M)		20 a
Diagnostic Coverage (DC)		0 %
Valve circuit		
Voltage		max. 32 V DC
Current		max. 240 mA
Short-circuit protection		no
Reverse polarity protection		yes, with reversed output LED is out of function, therfore more power for solenoid valve
Compliance with standards and directives		
Standard conformity		
Standards		EN 60947-5-2:2007 EN 60947-5-2/A1:2012 IEC 60947-5-2:2007 IEC 60947-5-2 AMD 1:2012
Approvals and certificates		
UL approval		cULus Listed, General Purpose, Class 2 Power Source
CCC approval		Certified by China Compulsory Certification (CCC)
Ambient conditions		
Ambient temperature		-25 ... 70 °C (-13 ... 158 °F)
Mechanical specifications		
Connection (system side)		Cage tension spring terminals
Core cross section (system side)		1.5/2.5 mm^2 flexible/rigid
Connection (valve side)		Cage tension spring terminals
Core cross section (valve side)		1.5/2.5 mm^2 flexible/rigid
Housing material		PBT
Sensing face		PBT
Degree of protection		IP67
Mass		180 g
Tightening torque, fastening screws		4 Nm ... 5 Nm
Tightening torque, housing screws		1 Nm
Tightening torque, cable gland		M20 x 1.5 ; max. 7 Nm M12 x 1.5 ; max. 1.5 Nm

Connection

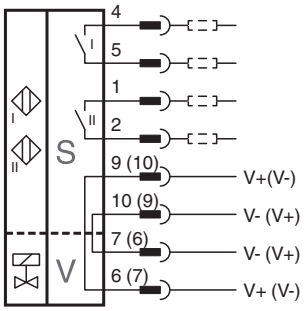

Installation

Note

The connections to this sensor are sealed with stopping plugs to protect against dirt and moisture. If not all of the connections are used in your application, then seal the remaining stopping plugs on the sensor permanently or check during initial installation and when performing regular maintenance work that the stopping plugs are secure and impermeable. If necessary, tighten the stopping plugs to a torque of 1 Nm.