FLUXER
FLOOD CONTROL

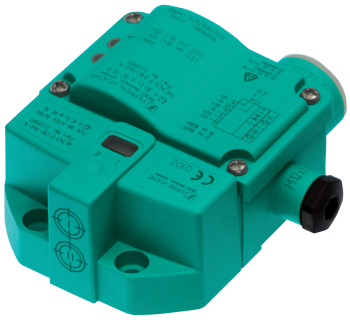

Inductive sensor

NBN3-F31K-E8-K

- Direct mounting on standard actuators
- Fixed setting
- LED for power on
- LEDs for switching state of sensor and solenoid valve

Dimensions

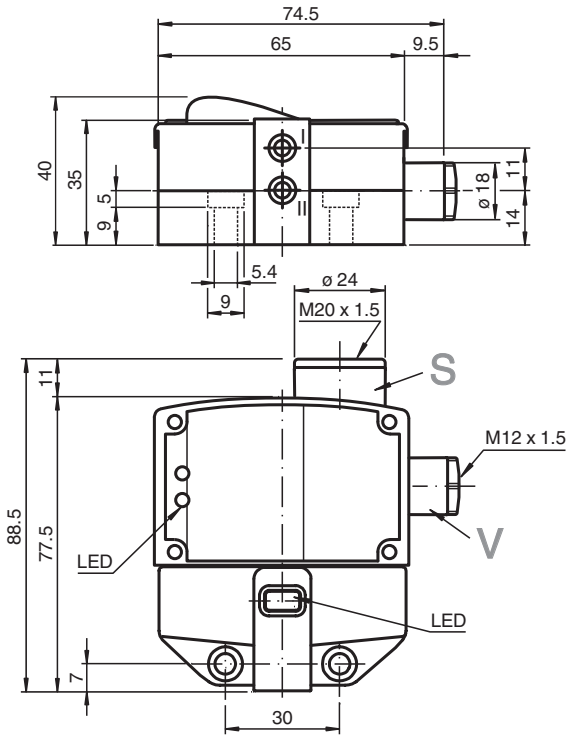

Technical Data

General specifications		
Switching function		2 x normally open (NO)
Output type		PNP
Rated operating distance	s_n	3 mm
Installation		flush mountable
Output polarity		DC
Assured operating distance	s_a	0 ... 2.43 mm
Actual operating distance	s_r	2.7 ... 3.3 mm typ.
Reduction factor r_{Al}		0.5
Reduction factor r_{Cu}		0.4

22-06-21

Technical Data

Reduction factor r_{304}		1
Reduction factor r_{St37}		1.2
Output type		4-wire
Nominal ratings		
Operating voltage	U_B	10 ... 30 V DC
Switching frequency	f	0 ... 500 Hz
Hysteresis	H	typ. 5 %
Reverse polarity protection		all connections
Short-circuit protection		pulsing
Voltage drop	U_d	≤ 3 V
Operating current	I_L	0 ... 100 mA
Off-state current	I_r	0 ... 0.5 mA typ. 0.1 µA
No-load supply current	I_0	≤ 25 mA
Operating voltage indicator		LED, green
Switching state indicator		LED, yellow
Valve status indicator		LED, yellow
Functional safety related parameters		
$MTTF_d$		780 a
Mission Time (T_M)		20 a
Diagnostic Coverage (DC)		0 %
Valve circuit		
Voltage		max. 32 V DC
Current		max. 240 mA
Short-circuit protection		no
Reverse polarity protection		yes, with reversed output LED is out of function, therfore more power for solenoid valve
Compliance with standards and directives		
Standard conformity		
Standards		EN 60947-5-2:2007 EN 60947-5-2/A1:2012 IEC 60947-5-2:2007 IEC 60947-5-2 AMD 1:2012
Approvals and certificates		
UL approval		cULus Listed, General Purpose
CSA approval		cCSAus Listed, General Purpose
CCC approval		CCC approval / marking not required for products rated ≤36 V
Ambient conditions		
Ambient temperature		-25 ... 70 °C (-13 ... 158 °F)
Mechanical specifications		
Connection (system side)		Cage tension spring terminals
Core cross section (system side)		1.5/2.5 mm² flexible/rigid
Connection (valve side)		Cage tension spring terminals
Core cross section (valve side)		1.5/2.5 mm² flexible/rigid
Housing material		PBT
Sensing face		PBT
Degree of protection		IP67
Tightening torque, fastening screws		4 Nm ... 5 Nm
Tightening torque, housing screws		1 Nm
Tightening torque, cable gland		M20 x 1.5 ; max. 7 Nm M12 x 1.5 ; max. 1.5 Nm

Connection

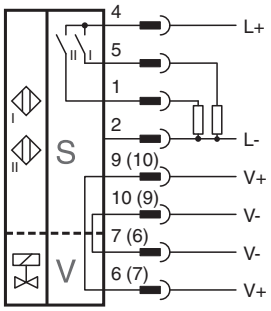

Accessories

	**BT115A**	Activator for F31 series
	**BT115X**	Activator for F31 series
	**BT65B**	Activator for F31 series
	**BT115B**	Activator for F31 series
	**BT65A**	Activator for F31 series
	**BT65X**	Activator for F31 series

Installation

Note

The connections to this sensor are sealed with stopping plugs to protect against dirt and moisture. If not all of the connections are used in your application, then seal the remaining stopping plugs on the sensor permanently or check during initial installation and when performing regular maintenance work that the stopping plugs are secure and impermeable. If necessary, tighten the stopping plugs to a torque of 1 Nm.