Flow Measurement

SITRANS FM (electromagnetic)

Battery-operated water meters / SITRANS FM MAG 8000

Overview



MAG 8000 is a comprehensive meter which intelligent information and high performance measurement as well as the easy to install concept take cost of ownership and customer service to a new level for water meter.

Benefits

Easy to install

- Compact or remote solution with factory mounted cable and customer setting from factory
- IP68/NEMA 6P enclosure. Sensor can be buried.
- Flexible power supply - internal or external battery pack or mains power supply with battery back-up possibilities
- Superior measurement
- Down to 0.2% maximum uncertainty
- Suitable for 0D in- and outlet conditions
- OIML R 49 type approval
- FM Fire Service Approval
- Bi-directional measurement

Long lasting performance/Low cost of Ownership

- No moving parts means less wear and tear.
- Up to 6 to 10 years maintenance-free operation in typical revenue application
- Robust construction built for the application

Intelligent information, easy to access

- Embedded self-testing and alarm/fault detection feature
- Internal data logger
- Advanced statistics and diagnostics
- Various add-on communication modules

Application

The following MAG 8000 versions are available as stand-alone water meters:

- MAG 8000 (7ME6810) for abstraction and distribution network
- MAG 8000 CT (7ME6820) for revenue and bulk metering

Design

MAG 8000 is designed to minimize power consumption.
The product program consists of

- Basic and advanced version
- Sensor sizes from DN 25 to 1200 (1" to 48")
- Compact and remote installation in IP68/NEMA 6P enclosure and factory-mounted cable
- SIMATIC PDM and Flow Tool PC configuration softwares

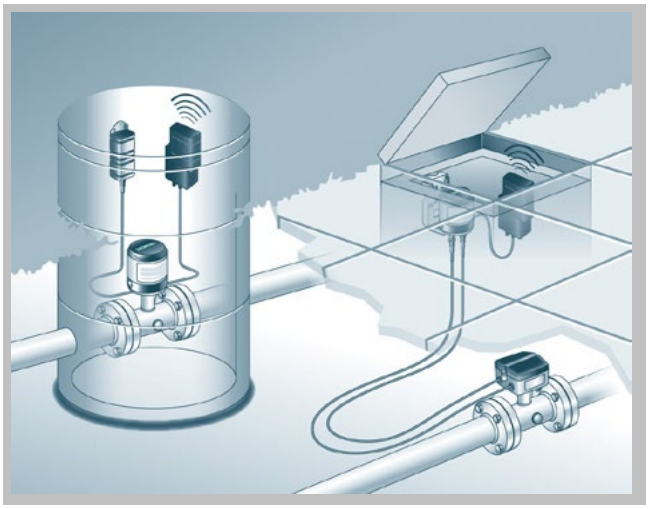



Modbus/Encoder module

Function

MAG 8000 is a microprocessor-based water meter with graphical display and key for optimum customer operation and information on site. The transmitter drives the magnetic field in the sensor, evaluates the flow signal from the sensor and calculates the volume passing through. It delivers the required information via the integrated pulse output or communication interfaces as part of a system solution. Its intelligent functionality, information and diagnostic ensure optimum meter performance and information to optimize water supply and billing.



MAG 8000 can be ordered as a Basic or an Advanced version.

Features/Version	MAG 8000 Basic	MAG 8000 Advanced
Measuring frequency in battery power mode (Manually selected)[1)]	1/15 or 1/30 or 1/60 Hz	6.25 ... 1/60 Hz depending of sensor size
Output MAG 8000	2 FW/RV/AI/CA	2 FW/RV/AI/CA
Communication	Add-on	Add-on
Data logger	Yes	Yes
Insulation test	Yes	Yes
Leakage detection	No	Yes
Meter utilization	No	Yes
Statistics	No	Yes
Tariff	No	Yes
Settle date (Revenue)	No	Yes

1) Excitation frequency settings with mains power supply, see technical specifications for each version

Some information is accessible via the display whereas all information is accessible via the IrDA communication interface with the PDM software. Data and parameters are registered in a EEPROM. They can all be read, but changing the information demands a software password or a hardware key attached to the printed circuit board.

The SIMATIC PDM tool gives the possibility of testing and verifying the flowmeter on site and creating a printed "Qualification Certificate" with all specific data that define the quality status of the measurement.

The Qualification Certificate consists of two pages with information about the actual status of the sensor:

Part 1 provides general settings, sensor and battery info, totalizer values and pulse output settings.

Part 2 provides detailed information about electronic and sensor functionality and a main parameter list for evaluating the functionality of the MAG 8000 water meter.

Function (continued)



SIMATIC PDM

For more details about SIMATIC PDM please go to "Communication".

Technical specifications

MAG 8000	
Installation	Compact (integral)
	Remote with factory-mounted cable 5, 10, 20 or 30 m (16.4, 32.8, 65.6 or 98.4 ft)
Enclosure	Stainless steel top housing (AISI 316) and coated brass bottom
	Remote wall mount bracket in stainless steel (AISI 304)
	Remote version terminal box in fibre glass reinforced polyamide
Cable entries	2 × M20 (one gland for one cable of size 6 ... 8 mm (0.02 ... 0.026 ft) is included in the standard delivery)
Display	Display with 8 digits for main information
	Index, menu and status symbols for dedicated information
Resolution	Totalized information can be displayed with 1, 2 or 3 decimals or automatic adjustment (default)
Flow unit	
Europe	Volume in m^3 and flow rate in m^3/h
US	Volume in Gallon and flow rate in GPM
Australia	Volume in Mi and flow rate as Ml/d
Optional display units	Volume: m^3 × 100, l × 100, G × 100, G × 1000, MG, CF × 100, CF × 1000, AF, Al, kl, BBL42
	Flow: m^3/min, m^3/d, l/s, l/min, GPS, GPH, GPD, MGD, CFS, CFM, CFH, BBL42/s, BBL42/min, BBL42/h, BBL42/d
Digital output	2 passive outputs (MOS), individual galvanically isolated
	Maximum load ±35 V DC, 50 mA short circuit protected
Output A function	Programmable as pulse volume – forward – reverse – forward/net – reverse/net
Output B function	Programmable as pulse volume (like output A), alarm
Output	Max. pulse rate of 50 Hz (pulse B) and 100 Hz (pulse A), pulse width of 5, 10, 50, 100, 500 ms
Communication	IrDA: Standard integrated infrared communication interface with Modbus RTU protocol
Add-on modules	• RS 232 serial interface with Modbus RTU (Rx/Tx/GND), point to point with max. 15 m cable
	• RS 485 serial interface with Modbus RTU (+/-/GND), multidrop with up to 32 devices with max. 1000 m cable
	• Encoder interface module (for Itron 200WP) "Sensus protocol"
	• 3G/UMTS module with or without analog input cable
	• IIoT Wireless Communication Module with or without analog input cable
Power supply	Auto detection of power source with display symbol for operation power
Internal battery pack	1 D-Cell 3.6 V/16.5 Ah
	2 D-Cell 3.6 V/33 Ah
External battery pack	4 D-Cell 3.6 V/66 Ah
Mains power supply	12 ... 24 V AC/DC (10 ... 32 V) 2 VA
	115 ... 230 V AC (85 ... 264 V) 2 VA
	Both mains power supply systems are upgradable for battery backup via internal D-Cell (3.6 V 16.5 Ah) or external battery pack.
Cable	3 m (9.8 ft) for external connection to mains supply (without cable plug)

Features	
Application identification	Tag number up to 15 characters
Time and date	Device embedded Real Time Clock (Synchronization with NTP server if 3G/UMTS module or IIoT WCM connected)
Totalizer	
MAG 8000	Totalizer 1 and Totalizer 2: Configurable to Forward, Reverse and Bidirectional netflow
	Totalizer 3: (following totalizer 1 setting) resettable via display key
Measurement	
Low flow cut-off	
• 7ME6810	Cut-off at 15 mm/s[1)]
• 7ME6820	Cut-off at 15 mm/s[1)]
Empty pipe detection	Symbolized in display
Data logger	Logging of 26 records: selectable as daily, weekly or monthly logging
Alarm	Active alarm is indicated on the display.
Data protection	All data stored in an EEPROM. Totalizers 1 and 2 are backed up every 10 min, statistic every hour and power consumption and temperature measurement every 4 hours.
	Password protection of all parameters and hardware protection of calibration and revenue parameters.
Battery power management	Optimal battery information on remaining capacity.
	Calculated capacity includes all consuming elements and available battery capacity is adjusted related to change in ambient temperature.
	Numbers of power-ups
	Date and time registered for first and last time power alarm.
Diagnostic	
Continuous self test including	Coil current to drive the magnetic field
	Signal input circuit
	Data calculation, handling and storing
Alarm statistics and logging for fault analyzing	Electrode impedance to check actual media contact
	Flow simulation to check pulse and communication signal chain for correct scaling
	Number of sensor measurements (excitations)
	Transmitter temperature (battery capacity calculation)
	Low impedance alarm for change in media
	Flow alarm when defined high flow exceeds
	Verification mode for fast measure performance check
Insulation test	Test of signal immunity against disturbance and bad installation. Test interval is selectable and measurement is interrupted during the test period of 4 min.
Leakage detection (only Advanced version)	Monitoring the lowest flow or volume during selected time window within 24 hours. Leakage is detected over a selectable period where monitored value exceed the possible leakage level. Min. and max. values are stored with date registration. Last store value visible on the display.
Meter Utilization (only Advanced version)	6 registers for monitoring total time the meter has operated in different flow intervals. Registered intervals are free selectable as % of Q_n (Q3).

Technical specifications (continued)

Features	
Tariff (only Advanced version)	6 tariff registers count the volume delivered within the selected tariff windows, based on time of day or flow rates or a combination. Tariff can also be used for consumption profile where consumption is related to different time intervals or flow rates. Tariff values visible on the display.
Settling date (only Advanced version)	On a predefined date the totalizer 1 index value is stored. Old values are stored to show the latest two totalized 1 index values. Settling values visible on the display.
Statistic (only Advanced version)	Min. flow rate with time and date registration Max. flow rate with time and date registration Min. daily consumption with date registration Max. daily consumption with date registration Latest 7 days total and daily consumption Actual month consumption Latest month consumption
PC Configuration Software PDM	• Meter configuration – online and offline mode • Own parameter settings • Parameter documentation

Features	
PC Configuration Software PDM	• Print and export of data and parameters PDM 9.0/9.1 Service Pack 1

[1] Siemens warrants the measurement accuracy down to a flow velocity of 15 mm/s. For a flow velocity below 15 mm/s, we don't warrant the measurement accuracy.

MAG 8000 water meter uncertainty

To ensure continuous accurate measurement, flowmeters must be calibrated. The calibration is conducted at Siemens flow facilities with traceable instruments referring directly to the physical unit of measurement according to the International System of Units (SI).

Therefore, the calibration certificate ensures recognition of the test results worldwide, including the US (NIST traceability).

Siemens offers accredited calibrations assured to ISO 17025 in the flow range from 0.0001 m^3/h to 10 000 m^3/h. Siemens Flow Instruments accredited laboratories are recognized by ILAC MRA (International Laboratory Accreditation Corporation - Mutual Recognition Arrangement) ensuring international traceability and recognition of the test results worldwide.

The selected calibration determines the accuracy of the meter. A standard calibration results in max. ±0.4% uncertainty and an extended calibration ±0.2%. A calibration certificate follows every sensor and calibration data are stored in the meter unit.

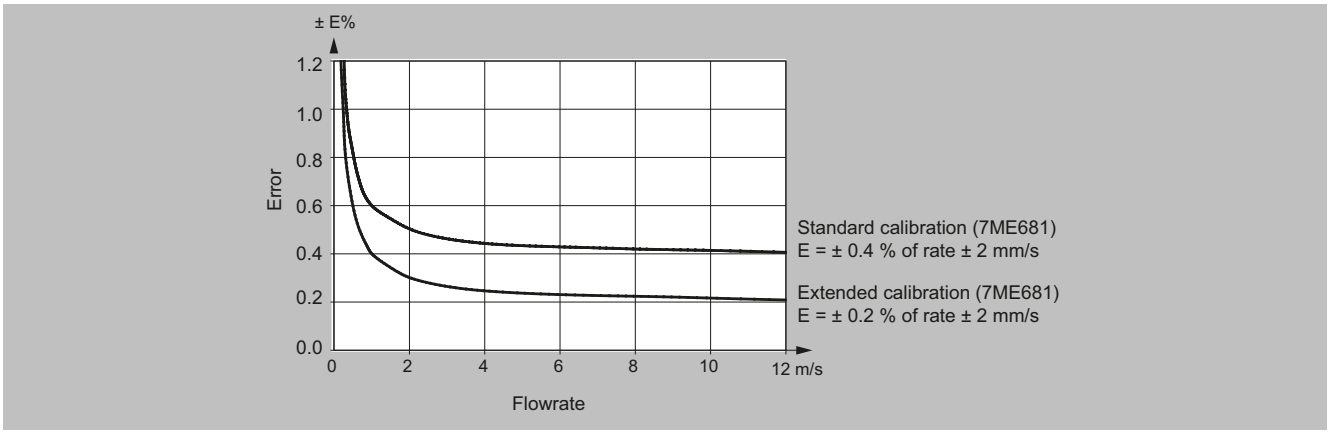

MAG 8000 (7ME6810) for Fire Service applications

MAG 8000 (7ME6810) is FM Fire Service approved for automatic fire protection systems according to the Fire Service Meters Standard, Class Number 1044. The approval is applicable for the sizes DN 50, DN 80, DN 100, DN 150, DN 200, DN 250, and DN 300 (2", 3", 4", 6", 8", 10", and 12") with ANSI B16.5 Class 150 flanges. The FM Fire Service approved product can be ordered via the Z-options P20, P21 and P22.

Technical specifications (continued)

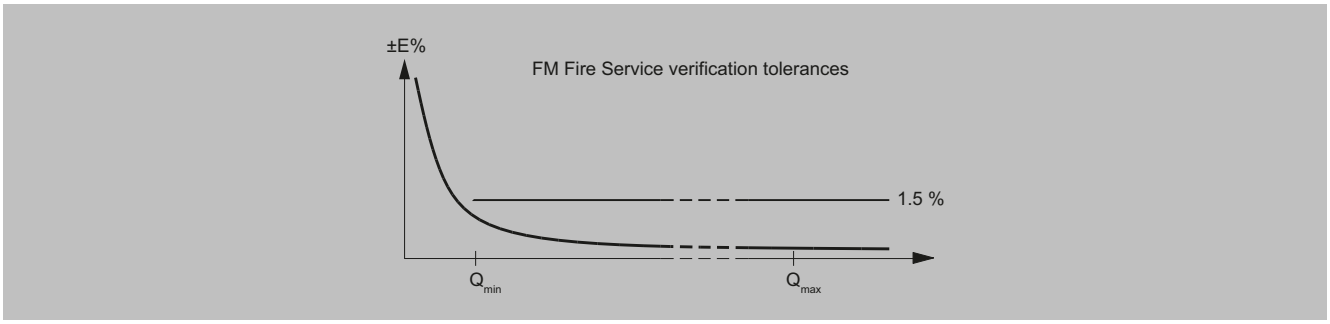

Grounding

The sensor body must be grounded using grounding straps and/or grounding rings to protect the flow signal against stray electrical noise. This ensures that the noise is carried through the sensor body and a noise-free measuring area within the sensor body. For MAG 8000 Irrigation grounding rings on both sides are factory-mounted.

Metal pipes

On metal pipes, connect the straps to both flanges.

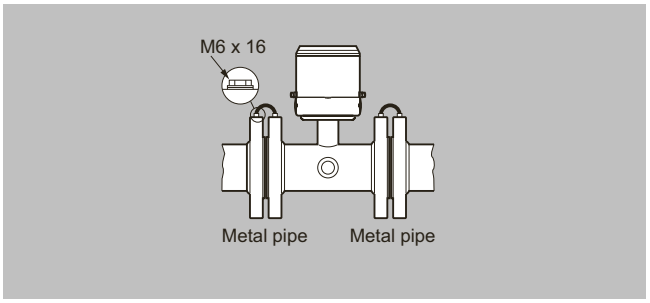

Plastic pipes

On plastic pipes and lined metal pipes, optional grounding rings must be used at both ends.Grounding rings has to be ordered separately see “grounding ring kit”.

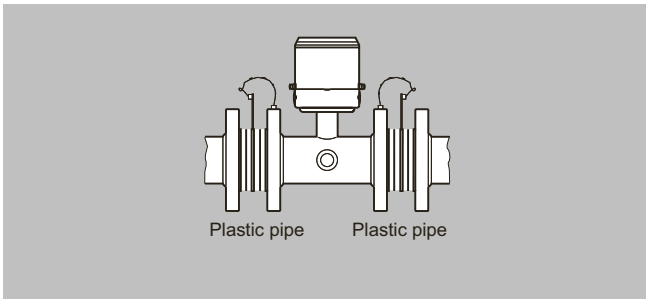

Combination of metal and plastic pipes

A combination of metal and plastic requires straps for metal pipe and grounding rings for plastic pipe.

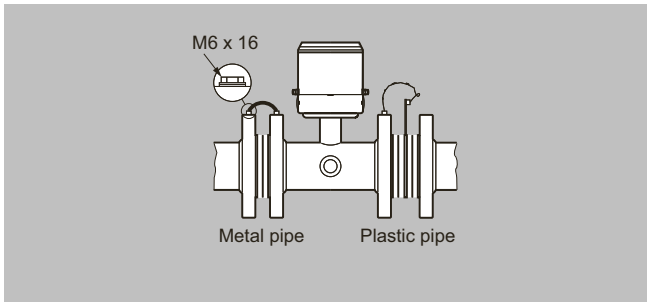

Battery operation time and calculation

The battery operation time depends on the connected battery pack as well as the operation condition of the meter.

MAG 8000 calculates the remaining capacity every 4 hours and includes all consuming elements. Calculation compensates for temperature influence on battery capacity.

Technical specifications (continued)

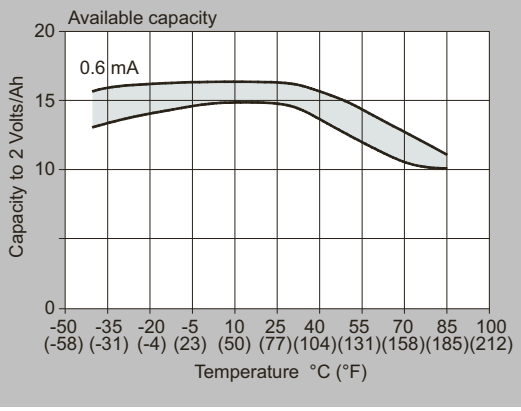

The graphic shows the effect from other temperatures. A variation in temperature from 15 °C to 55 °C (59 to 131 °F) reduces the capacity by 17% in the table from 15 Ah to 12.5 Ah.

At typical revenue scenario of expected battery operation time can be seen in the table below.

The measurement for calculating the rest capacity of the battery life time is only completed if the system has no active fatal faults or the empty pipe is active. Maximum battery specification is 10 years operation.

Scenario - Revenue application	
Output A	Pulse rate max. 10 Hz
Output B	Alarm or call-up
Meter dialog	1 hour per month
Add-com	None
Temperature profile	• 5% at 0 °C (32 °F) • 80% at 15 °C (59 °F) • 15% at 50 °C (122 °F)

Battery lifetime (subject to the assumptions mentioned above)[1)]

MAG 8000 for abstraction and distribution network applications (7ME6810) and MAG 8000 CT for revenue and bulk metering (7ME6820)

Excitation frequency (24 h operation)		1/60 Hz	1/30 Hz	1/15 Hz	1/5 Hz	1.5625 Hz	3.125 Hz	6.25 Hz
2 D-Cell battery 33 Ah Internal battery pack	DN 25 ... 150 (1" ... 6")	9 years	9 years	7 years	43 months	8 months	3 months	2 months
	DN 200 ... 600 (8" ... 24")	9 years	6 years	4 years	22 months	3 months	1 month	N/A
	DN 700 ... 1200 (28" ... 48")	7 years	4 years	2 years	12 months	1 months	N/A	N/A
4 D-Cell battery 66 Ah External battery pack	DN 25 ... 150 (1" ... 68")	15 years	15 years	14 years	86 months	16 months	7 months	4 months
	DN 200 ... 600 (8" ... 24")	15 years	13 years	8 years	44 months	7 months	3 months	N/A
	DN 700 ... 1200 (28" ... 48")	14 years	9 years	5 years	24 months	3 months	N/A	N/A

[1)] Battery lifetime determined under lab conditions at +20 °C.

Typical battery lifetime scenario for MAG 8000 with 3G or IIoT Wireless Communication Module

Transmission once a day and MAG 8000 factory settings	
2 D-Cell battery 33 Ah Internal battery pack	3 ... 4 years
4 D-Cell battery 66 Ah External battery pack	7 ... 8 years

External battery pack can be used as battery backup for mains power supply (if two cable entries in one cable gland are needed, order cable glands with two entries, see accessories)

Serial RS 232/RS 485 add-on communication modules are designed for mains powered systems as the battery operation time will be reduced. At 1 hour communication per month (all meter data collected 2 times per day) and the module is connected, the operation time is reduced to:

- RS 232:
  - Switched on constantly:
    6.4 months for 2 D-cell internal battery pack / 12.8 months for 4 D-cell ext. battery pack
  - Switched on 2 s/day:
    39 months for 2 D-cell internal battery pack / 78 months for 4 D-cell ext. battery pack
- RS 485:

Technical specifications (continued)

- With the termination resistor on:

  2.3 months for 2 D-cell internal battery pack / 4.6 months for 4 D-cell ext. battery pack

- With the termination resistor off:

  39 months for 2 D-cell internal battery pack / 78 months for 4 D-cell ext. battery pack, in case the entire communication time is less than 4 hours/month

Dimensional drawings

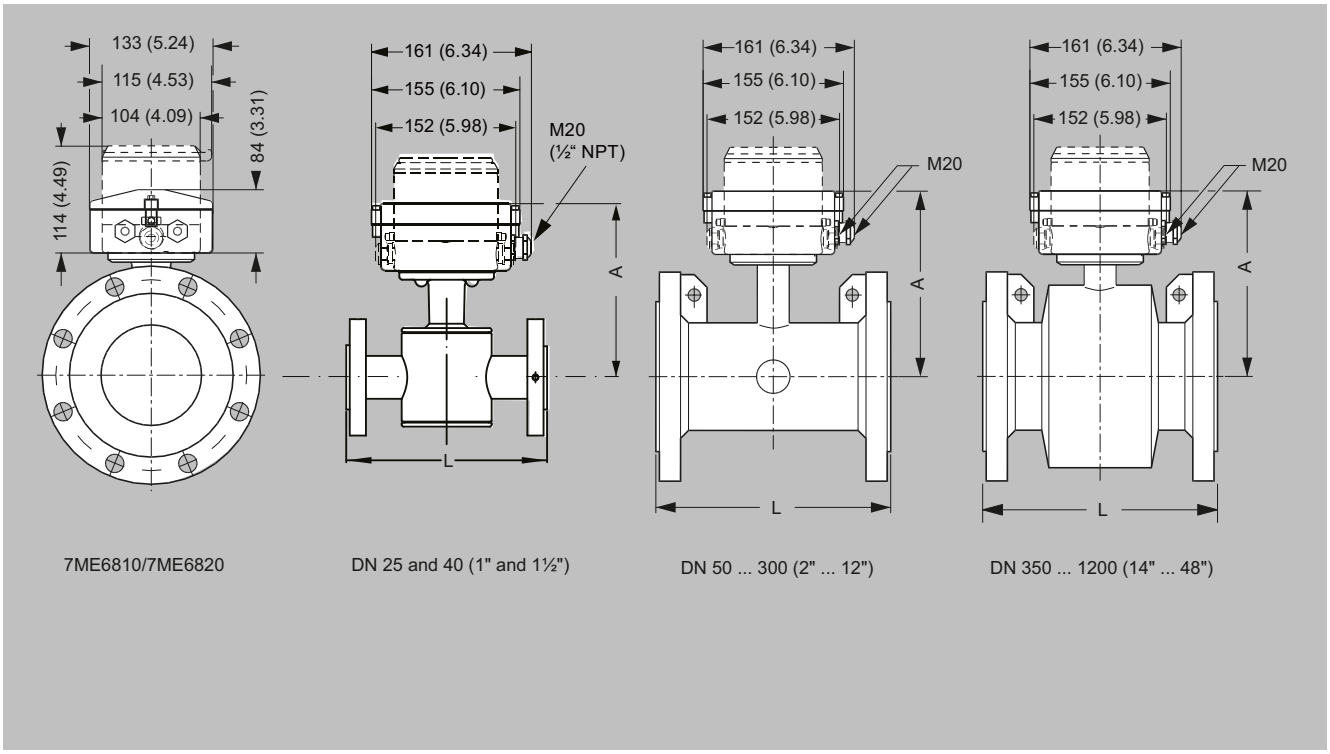

Dimensions in mm (inch)

Nominal DN size	A	L, lengths[1]							Weight[2]	
	EPDM (7ME6810 and 7ME6820)	EN 1092-1 PN 10	EN 1092-1 PN 16/PN 1-6 non-PED	EN 1092-1 PN 40	ANSI 16.5 Class 150	AS 4087 PN 16	AWA C-207 Class D	AS 2129		
mm (inch)	mm (inch)	mm	mm	mm	inch	mm	mm	mm	kg	lb
25 (1)	188 (7.4)	-	-	200	7.9	200	-	200	6	13
40 (1½)	203 (8.0)	-	-	200	7.9	200	-	200	9	20
50 (2)	178 (7.0)	-	200	-	7.9	200	-	-	11	25
65 (2½)	181 (7.1)	-	200	-	7.9	200	-	-	13	29
80 (3)	191 (7.5)	-	200	-	7.9	200	-	-	15	34
100 (4)	197 (7.8)	-	250	-	9.8	250	-	-	17	38
125 (5)	210 (8.3)	-	250	-	9.8	250	-	250	22	50
150 (6)	224 (8.8)	-	300	-	11.8	300	-	-	28	63
200 (8)	249 (9.8)	350	350	-	13.8	350	-	-	50	113

Dimensional drawings (continued)

Nominal DN size	A	L, lengths[1]							Weight[2]	
	EPDM (7ME6810 and 7ME6820)	EN 1092-1 PN 10	EN 1092-1 PN 16/PN 1-6 non-PED	EN 1092-1 PN 40	ANSI 16.5 Class 150	AS 4087 PN 16	AWA C-207 Class D	AS 2129		
mm (inch)	mm (inch)	mm	mm	mm	inch	mm	mm	mm	kg	lb
250 (10)	276 (10.9)	450	450	-	17.7	450	-	-	71	160
300 (12)	303 (11.9)	500	500	-	19.7	500	-	-	88	198
350 (14)	365 (14.4)	550	550	-	21.7	550	-	-	127	279
400 (16)	391 (15.4)	600	600	-	23.6	600	-	-	145	318
450 (18)	421 (16.6)	600	600	-	23.6	600	-	-	175	384
500 (20)	447 (17.6)	600	600	-	23.6	600	-	-	225	494
600 (24)	497 (19.6)	600	600	-	23.6	600	-	-	340	747
700 (28)	548 (21.6)	700	875/700	-	N/A	700	700	-	316	694
750 (30)	573 (22.6)	N/A	N/A	-	N/A	N/A	750	-	N/A	N/A
800 (32)	603 (23.7)	800	1000/800	-	N/A	800	800	-	398	1045
900 (36)	656 (25.8)	900	1125/900	-	N/A	900	900	-	476	1045
1000 (40)	708 (27.9)	1000	1250/1000	-	N/A	1000	1000	-	602	1322
1050 (42)	708 (27.9)	N/A	N/A	-	N/A	N/A	1050	-	N/A	N/A
1100 (44)	759 (29.9)	N/A	N/A	-	N/A	N/A	1100	-	N/A	N/A
1200 (48)	814 (32.0)	1200	1500/1200	-	N/A	1200	1200	-	887	1996

[1] Tolerances on built-in length: DN 15 to DN 200 (½" to 8"): +0/-3 mm (+0/-0.12"), DN 250 to DN 400 (10" to 16"): +0/-5 mm (+0/-0.20"), DN 450 to DN 600 (18" to 24"): +5/-5 mm (+0.20/-0.20"), DN 700 to DN 1200 (28" to 48"): +10/-10 mm (+0.39/-0.39").
[2] For remote version the sensor weight is reduced with 2 kg (4.5 lbs).

Remote version

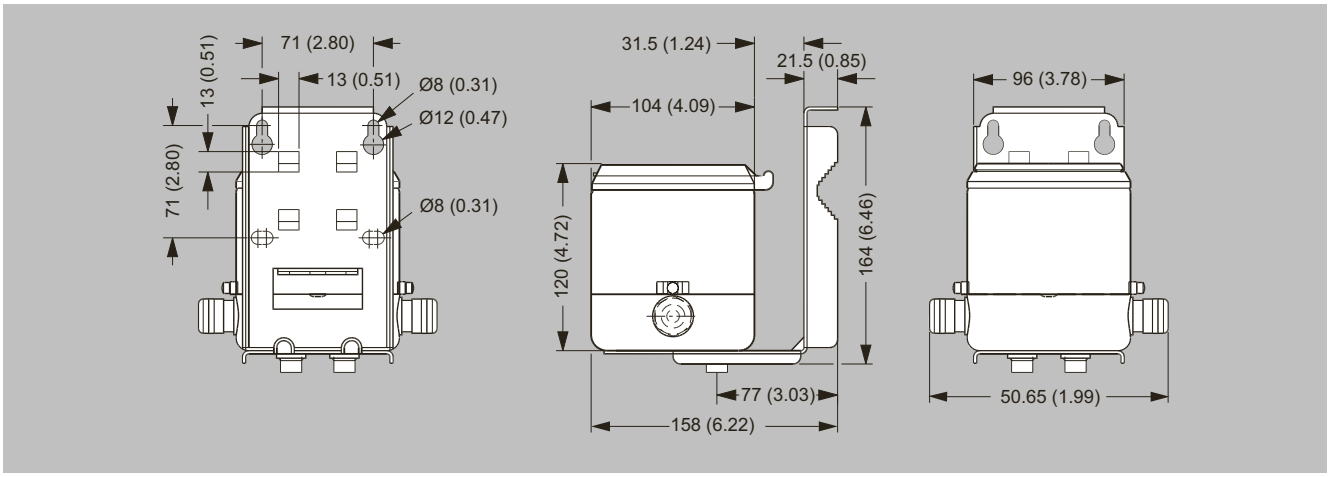

Dimensions in mm (inch), weight 3.5 kg (8 lbs)

Dimensional drawings (continued)

External battery pack

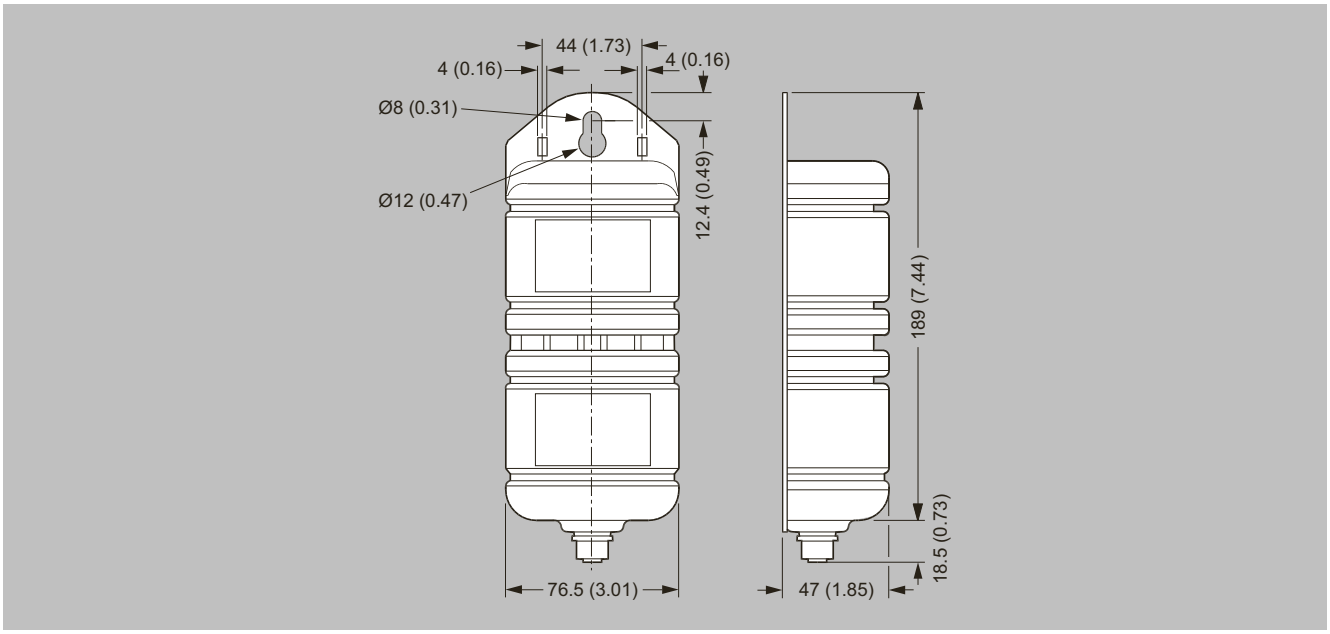

Dimensions in mm (inch), weight 2.0 kg (4.5 lbs)

Battery pack has to be mounted in upwards position to ensure maximum battery capacity.

Grounding rings

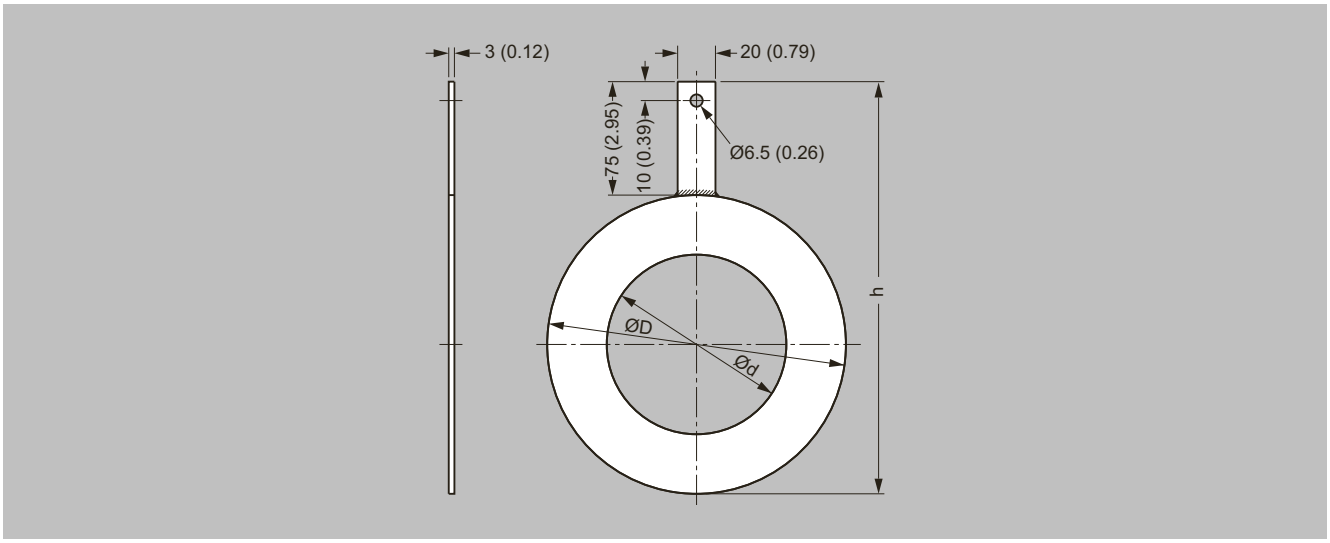

Dimensions in mm (inch) for grounding rings MAG 8000 with EPDM lining (7ME6810 and 7ME6820) DN 25 to DN 300

Dimensional drawings (continued)

Dimension	Internal diameter (d)	Outside diameter (D)	h
DN 25	27	68	143
DN 40	38	88	163
DN 50	52	100	175
DN 65	64	120	195
DN 80	79	133	208
DN 100	95	158	233
DN 125	115	188	263
DN 150	145	216	291
DN 200	193	268	343
DN 250	246	324	399
DN 300	295	374	449

Circuit diagrams

Electrical installation and pulse output – Connection diagram

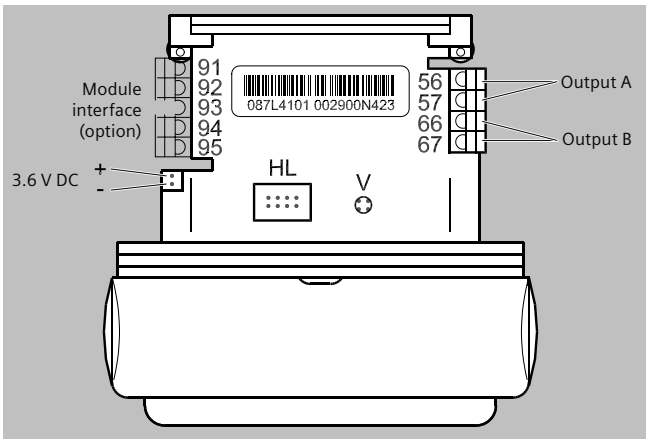

HL = Hardware lock key connection
V = Push button for verification mode

Pulse wire connection

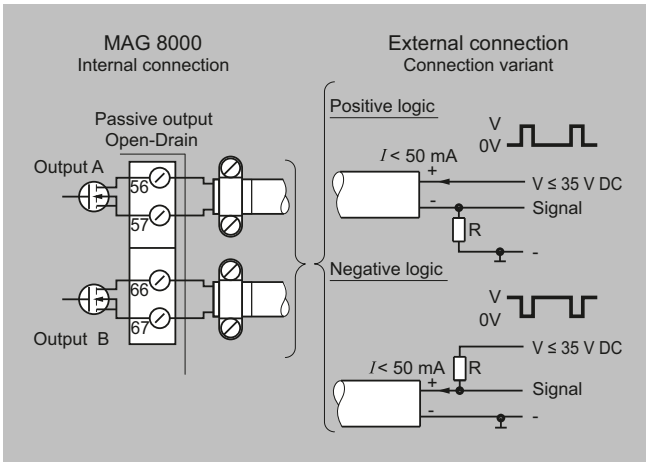

The pulse output can be configured as volume, alarm or call-up. The output can be connected as positive or negative logic. R = pull up/down is selected in relation to the Vx power supply and with a max. current I of 50 mA.

Use shielded cable to avoid EMC problems. Make sure the shield is correctly mounted under the cable clamp (no pig tail).

Overview



SITRANS FM MAG 8000 for abstraction and distribution network application

Benefits

Easy to install

- Compact or remote solution with factory mounted cable
- IP68/NEMA 6P enclosure. Sensor can be buried
- Flexible power supply - internal or external battery pack or mains power supply with battery back-up possibilities

Long-term stability/Low cost of ownership

- No moving parts in a robust construction means less wear and tear
- Basic and advanced transmitter versions with different optional add-on communication modules fulfill various customer requirements for high cost efficiency
- Up to 0.2% maximum uncertainty
- Bi-directional measurement with an outstanding low flow performance
- Up to 10 years maintenance-free operation in typical applications

Intelligent information, easy to access

- Advanced information on site
- Advanced statistics and diagnostics
- Optional high-performance 3G/UMTS module offers an efficient solution for remote measurement and monitor via wireless networks

Selection and ordering data

SITRANS FM MAG 8000 water meter	Article No. 7ME6810- ● ● ● ● ● - ● ● ● ●
Click on the Article No. for the online configuration in the PIA Life Cycle Portal.	
Diameter	
DN 25, 1 inch	2 D
DN 40, 1½" inch	2 R
DN 50, 2 inch	2 Y
DN 65, 2½ inch	3 F
DN 80, 3 inch	3 M
DN 100, 4 inch	3 T
DN 125, 5 inch	4 B
DN 150, 6 inch	4 H
DN 200, 8 inch	4 P
DN 250, 10 inch	4 V
DN 300, 12 inch	5 D
DN 350, 14 inch	5 K
DN 400, 16 inch	5 R
DN 450, 18 inch	5 Y
DN 500, 20 inch	6 F
DN 600, 24 inch	6 P
DN 700, 28 inch[1)]	6 Y
DN 750, 30 inch[1)]	7 D
DN 800, 32 inch[1)]	7 H
DN 900, 36 inch[1)]	7 M
DN 1000, 40 inch[1)]	7 R
DN 1050, 42 inch[1)]	7 U
DN 1100, 44 inch[1)]	7 V
DN 1200, 48 inch[1)]	8 B
Flange norm and pressure rating	
EN 1092-1, PN 10 flanges	B
EN 1092-1, PN 16 flanges (PED compliant)	C
EN 1092-1, PN 16 flanges, non-PED type of equipment (excluded from scope of PED 2014/68/EU)	D
EN 1092-1, PN 25 flanges	E
EN 1092-1, PN 40 flanges	F
ANSI B16.5, Class 150 flanges	J
AWWA C-207, Class D flanges	L
AS 4087, PN 16 flanges	N
Sensor version	
EPDM liner and Hastelloy electrodes, corrosion-resistant coating of category C4	3
EPDM liner and Hastelloy electrodes, 300 µm corrosion-resistant coating of category C5	4
Calibration	
Standard ±0.4% of rate ±2 mm/s	1
Extended ±0.2% of rate ±2 mm/s DN 50 ... 300 (2" ... 12")	2
NMI M 10 (2.5%) without verification	3
Region version	
Europe (m^3, m^3/h, 50 Hz)	1
USA (Gallon, GPM, 60 Hz)	2
Australia (Ml, Ml/d, 50 Hz)	3
Transmitter type and installation	
Basic version integral on sensor	A
Basic version, remote cables mounted on sensor with IP68/NEMA 6P plugs:	
• 5 m (16.4 ft)	B
• 10 m (32.8 ft)	C
• 20 m (65.6 ft)	D
• 30 m (98.4 ft)	E
Advanced version integral on sensor	K
Advanced version, remote cables mounted on sensor with IP68/NEMA 6P plugs:	

Selection and ordering data (continued)

SITRANS FM MAG 8000 water meter	Article No. 7ME6810- ● ● ● ● ● - ● ● ● ●
• 5 m (16.4 ft)	L
• 10 m (32.8 ft)	M
• 20 m (65.6 ft)	N
• 30 m (98.4 ft)	P
Communication interface	
No additional "add-on" communication module installed	A
Serial RS 485 with Modbus RTU (terminated as end device)	B
Serial RS 232 with Modbus RTU	C
Encoder interface with Sensus protocol	D
IIoT Wireless Communication Module with remote antenna including cable 5 m (16.4 ft)[2]	L
IIoT Wireless Communication Module with remote antenna including cable 5 m (16.4 ft) and connection cable 2.5 m (8.2 ft) for analog inputs[2]	N
3G/UMTS communication module with remote antenna; 5 m (16.4 ft)[2]	S
3G/UMTS communication module with remote antenna cable 5 m (16.4 ft) and analog input cable 2.5 m (8.2 ft)[2]	T
Power supply	
Internal battery (battery not included)	0
Internal battery pack installed[2]	1
Power cable 1.5 m (4.9 ft) with IP68/NEMA 6P plugs for external battery (no battery included)	2
12/24 V AC/DC power supply with battery backup and 3 m (9.8 ft) power cable for external connection (no battery included)	3
115 ... 230 V AC power supply with battery backup and 3 m (9.8 ft) power cable for external connection (no battery included)	4
External battery (battery included) and 1.5 m (4.9 ft) power cable with IP68/NEMA 6P plugs[2]	5
12/24 V AC/DC power supply with backup battery included and 3 m (9.8 ft) power cable for external connection[2]	6
115 ... 230 V AC power supply with backup battery included and 3 m (9.8 ft) power cable for external connection[2]	7
115 ... 230 V AC power supply with 3 m (9.8 ft) power cable for external connection and 1.5 m (4.9 ft) power cable for external battery pack as backup (battery not included)	8

1) The diameter DN 700 (28") to DN 1200 (48") is only available as remote transmitter type installation.
2) Lithium batteries are subject to special transportation regulations according to United Nations "Regulation of Dangerous Goods, UN 3090 and UN 3091". Special transport documentation is required to observe these regulations. This may influence both transport time and costs.

	Order code
Options Please add "**-Z**" to Article No. and specify Order code(s) and plain text.	
Certificate	
Inspection certificate 3.1 (EN 10204) - pressure test	**C01**
Material certificate according to EN 10204-3.1[1]	**C12**
Special calibration	
5-point calibration for DN 25 ... 200[2]	**D01**
5-point calibration for DN 250 ... 600[2]	**D02**
5-point calibration for DN 700 ... 1200[2]	**D03**
10-point calibration for DN 25 ... 200[3]	**D06**
10-point calibration for DN 250 ... 600[3]	**D07**
10-point calibration for DN 700 ... 1200[3]	**D08**
Default (2 × 25% and 2 × 90%) match-pair calibration for DN 25 ... 200	**D11**
Default (2 × 25% and 2 × 90%) match-pair calibration for DN 250 ... 600	**D12**
Default (2 × 25% and 2 × 90%) match-pair calibration for DN 700 ... 1200	**D13**
5-point, matched-pair calibration for DN 25 ... 200[2]	**D15**
5-point, matched-pair calibration for DN 250 ... 600[2]	**D16**
5-point, matched-pair calibration for DN 700 ... 1200[2]	**D17**
10-point, matched-pair calibration for DN 25 ... 200[3]	**D18**
10-point, matched-pair calibration for DN 250 ... 600[3]	**D19**

	Order code
10-point, matched-pair calibration for DN 700 ... 1200[3]	**D20**
Flow unit	
l/s	**L00**
MGD	**L01**
CFS	**L02**
l/min	**L03**
m^3/min	**L04**
GPM	**L05**
CFM	**L06**
l/h	**L07**
m^3/h	**L08**
GPH	**L09**
CFH	**L10**
GPS	**L11**
Ml/d	**L12**
m^3/d	**L13**
GPD	**L14**
BBL42/s	**L15**
BBL42/min	**L16**
BBL42/h	**L17**
BBL42/d	**L18**

Selection and ordering data (continued)

	Order code
Totalizer Volume calculation (default totalizer 1= forward and totalizer 2 = reverse)	
Totalizer 1 = RV, reverse flow	**L20**
Totalizer 1 = NET, net flow	**L22**
Totalizer 2 = FW, forward flow	**L30**
Totalizer 2 = NET, net flow	**L31**
Volume unit	
m^3	**L40**
Ml	**L41**
G	**L42**
AF	**L43**
l × 100	**L44**
m^3 × 100	**L45**
G × 100	**L46**
CF × 100	**L47**
MG	**L48**
G × 1000	**L49**
CF × 1000	**L50**
Al	**L51**
kl	**L52**
BBL42 (US oil barrel, 1 barrel = 42 US gallons)	**L54**
Volume unit = AF, amount per pulse A = 1 US Gallon[5)]	**L55**
Volume unit = Al, amount per pulse A = 1 US Gallon[5)]	**L56**
Volume unit = CFx100, amount per pulse A = 1 US Gallon[5)]	**L57**
Volume unit = BBL42, amount per pulse A = 1 US Gallon[5)]	**L58**
Pulse set up (default pulse A = forward and pulse B = Alarm, pulse width = 50 ms)	
A function = RV, reverse flow	**L62**
A function = FWnet, forward net flow	**L63**
A function = RVnet, reverse net flow	**L64**
A function = Off	**L65**
Volume per pulse A = × 0.0001[4)]	**L70**
Volume per pulse A = × 0.001[4)]	**L71**
Volume per pulse A = × 0.01[4)]	**L72**
Volume per pulse A = × 0.1[4)]	**L73**
Volume per pulse A = × 1[4)]	**L74**
Pulse A pulse width 5 ms (volume per pulse × 1)	**L75**
Pulse A pulse width 10 ms (volume per pulse × 1)	**L76**
Pulse A pulse width 50 ms (volume per pulse × 1)	**L77**
Pulse A pulse width 100 ms (volume per pulse × 1)	**L78**
Pulse A pulse width 500 ms (volume per pulse × 1)	**L79**
B function = FW, forward flow	**L80**
B function = RV, verse flow	**L81**
B function = FWnet, forward net flow	**L82**
B function = RVnet, reverse net flow	**L83**
B function = Alarm	**L84**
B function = Call up	**L85**
Volume per pulse B = × 0.0001[4)]	**L90**
Volume per pulse B = × 0.001[4)]	**L91**
Volume per pulse B = × 0.01[4)]	**L92**
Volume per pulse B = × 0.1[4)]	**L93**
Volume per pulse B = × 1[4)]	**L94**
Device operation	
Only operator menu activated	**M11**
Data logger set up (default month logging)	
DataloggerInterval = Daily	**M31**
DataloggerInterval = Weekly	**M32**
Region specific settings	
Low flow cut off = 5 mm/s[6)]	**M50**
Factory mounted cables	
4.8 m (15.75 ft) pulse cable A+B	**M81**
4.8 m (15.75 ft) communication cable RS 232/RS 485 terminated as end device	**M82**
Fixed cable/COM cable, 2 × 4.8 m, connected at A and B and COM 2 × 2 × 2-wire twisted. Marking on Modbus cable	**M83**
20 m (65.6 ft) pulse cable A+B	**M84**
20 m (65.6 ft) communication cable RS 232/RS 485 terminated as end device	**M85**
Fixed cable/COM cable, 2 × 20 m, connected at A and B and COM 2 × 2 × 2-wire twisted. Marking on Modbus cable	**M86**
Cello 2 channel, input cable 3 m (9.84 ft) with Brad Harrison micro-change 3 way connector	**M87**
Cello 2 channel, input cable 5 m (16.4 ft) with MIL-C-26482 spec. connectors	**M89**
Encoder interface cable with connector for ITRON 200WP radio, length 25 ft	**M90**
Encoder interface cable with connector for ITRON 200WP radio, length 5 ft	**M91**
SOFREL cable 2 m for LS42 data logger	**M92**
Adaptors for conduit installation	**M94**
SOFREL cable 2 m for LS-Flow data logger	**M97**
FM Fire Service Approval (with ANSI B16.5 Class 150 flanges)	
DN 50, DN 80, DN 100 (2", 3", 4")	**P20**
DN 150, DN 200 (6", 8")	**P21**
DN 250, DN 300 (10", 12")	**P22**
Region/customer specific labels	
Chinese Type Label	**W06**
KCC label (South Korea)	**W28**
DIN 43863 label[1)]	**H21**
DIN 43863 label with SWM mark[1)]	**H22**
ADDC label	**H23**
Country of origin	
France	**F55**

1) Under preparation.
2) 20%, 40%, 60%, 80%, 100% of factory Q_{max}
3) Ascending and descending at 20%, 40%, 60%, 80%, 100% of factory Q_{max}
4) Pulse width = 10 ms
5) Pulse width = 5 ms
6) Siemens warrants the measurement accuracy down to a flow velocity of 15 mm/s. For a flow velocity below 15 mm/s, we don't warrant the measurement accuracy.

Selection and ordering data (continued)

Operating instructions for SITRANS FM MAG 8000

Description	Article No.
• English	A5E03071515
• German	A5E00740986

All literature is available to download for free, in a range of languages, at http://www.siemens.com/processinstrumentation/documentation

Operating instructions for MAG 8000 3G/UMTS communication module

Description	Article No.
• English	A5E03644134

Technical specifications

MAG 8000 for abstraction and distribution network application (7ME6810)	
Accuracy	Standard calibration: ±0.4% ±2 mm/s Extended calibration DN 50 ... 300 (2" ... 12"): ± 0.2% of rate ±2 mm/s[5]
Low flow cut-off (default)	15 mm/s
Media conductivity	Clean water > 20 µs/cm
Temperature	
Ambient	-20 ... +60 °C (-4 ... +140 °F)
Media	0 ... 70 °C (32 ... 158 °F)
Storage	-40 ... +70 °C (-40 ... +158 °F)
Enclosure rating	
Remote sensor	IP68 to EN 60529/NEMA 6P, 10 mH_2O continuously
Compact version	IP68 to EN 60529/NEMA 6P, 3 mH_2O for six months
Certificates and approvals	
Calibration	
• Standard calibration	2 × 25% and 2 × 90% (default)
• Special calibration	5-point calibration: 20%, 40%, 60%, 80%, 100% of factory Q_{max} 10-point calibration: ascending and descending at 20%, 40%, 60%, 80%, 100% of factory Q_{max} Matched-pair calibration: default, 5-point, 10-point
Material certificate EN 10204-3.1	Available when ordering together with meter[1]
Drinking water approvals	• NSF/ANSI Standard 61[2] (cold water) USA • WRAS (BS 6920 cold water) UK • ACS Listed France • DVGW W270 Germany • Belgaqua (B) • MCERTS (GB) • AS/NZS 4020 (Australia/New Zealand) up to 70 °C water temperature • AS/NZS 4020: 2018
Fire Service Approvals	FM Fire Service Meter (Class Number 1044)[3]
Metrological approvals	CPA (CN)
Conformity	• PED: 2014/68/EU[4] • EMC: IEC/EN 61326
Sensor version	Coned sensor (octagon liner): DN 25 and 40 (½" ... 1½") Coned sensor: DN 50 ... 300 (2" ... 12") Full bore sensor: DN 350 ... 1200 (14" ... 48")

Technical specifications (continued)

MAG 8000 for abstraction and distribution network application (7ME6810)	
Sensor material	
• Housing and flanges	DN 25 ... 1200 (2" ... 48"): Carbon steel ASTM A 105 with corrosion-resistant coating of category C4 or C5 according to ISO 12944-2
• Measuring pipe	DN 350 ... 1200 (14" ... 48"): Stainless steel AISI 304/1.4301
Measuring principle	Electromagnetic induction
Excitation frequency	
Basic version	
• Battery-powered	DN 25 ... 150 (1" ... 6"): 1/15 Hz DN 200 ... 600 (8" ... 24"): 1/30 Hz DN 700 ... 1200 (28" ... 48"): 1/60 Hz
• Mains-powered	DN 25 ... 150 (1" ... 6"): 6.25 Hz DN 200 ... 600 (8" ... 24"): 3.125 Hz DN 700 ... 1200 (28" ... 48"): 1.5625 Hz
Advanced version	
• Battery-powered	DN 25 ... 150 (1" ... 6"): 1/15 Hz (adjustable up to 6.25 Hz; reduced battery lifetime) DN 200 ... 600 (8" ... 24"): 1/30 Hz (adjustable up to 3.125 Hz; reduced battery lifetime) DN 700 ... 1200 (28" ... 48"): 1/60 Hz (adjustable up to 1.5625 Hz; reduced battery lifetime)
• Mains-powered	DN 25 ... 150 (1" ... 6"): 6.25 Hz DN 200 ... 600 (8" ... 24"): 3.125 Hz DN 700 ... 1200 (28" ... 48"): 1.5625 Hz
Flanges	
EN 1092-1 (DIN 2501)	PN 10 (145 psi): DN 200 ... 300 (8" ... 12") Flat face PN 10 (145 psi): DN 350 ... 1200 (14" ... 48") Raised face[6] PN 16 (232 psi): DN 50 ... 300 (2" ... 12") Flat face[6] PN 16 (232 psi): DN 350 ... 1200 (14" ... 48") Raised face PN 40 (580 psi): DN 25 and 40 (½" ... 1½") Flat face
ANSI 16.5	Class 150 (20 bar (290 psi)): 1" ... 12" Flat face Class 150 (20 bar (290 psi)): 14" ... 24" Raised face
AWWA C-207	PN 10 (145 psi): 28" ... 48" Flat face
AS 4087	PN 16 (232 psi): DN 50 ... DN 300 (2" ... 12") Flat face PN 16 (232 psi): DN 350 ... DN 1200 (14" ... 48") Raised face
Liner	EPDM
Electrode and grounding electrodes	Hastelloy C276/2.4819
Grounding straps	Grounding straps are premounted from the factory on each side of the sensor.

1) Has to be ordered with the meter. It is not possible to order the certificate afterwards.
2) Including Annex G.

Technical specifications (continued)

3) Not for sensors with 300 µm coating.
4) For further information on PED standard and requirements see the section about Pressure Equipment Directive.
5) Siemens warrants the measurement accuracy down to a flow velocity of 15 mm/s. For a flow velocity below 15 mm/s, we don't warrant the measurement accuracy.
6) DN ≤ 600 type 01 (SORF); DN > 600 type 11 (WNRF).

Overview



SITRANS FM MAG 8000 CT, compact version

Benefits

Approvals

- MI-001, OIML R 49/OIML R 49 MAA
- FM Fire Service

Easy to install

- Compact or remote solution with factory mounted cable and customer setting from factory
- IP68/NEMA 6P enclosure. Sensor can be buried.
- Flexible power supply - internal or external battery pack or mains power supply with battery back-up possibilities

Long-term stability/Low cost of ownership

- No moving parts in a robust construction means less wear and tear
- Basic and advanced transmitter versions with different optional add-on communication modules fulfill various customer requirements for high cost efficiency
- Bi-directional measurement with an outstanding low flow performance
- Up to 10 years maintenance-free operation in typical applications
- Insignificant pressure drop

Intelligent information, easy to access

- Advanced information on site
- Advanced statistics and diagnostics
- Connectable to common AMR systems

Selection and ordering data

SITRANS FM MAG 8000 CT water meter with EPDM liner and Hastelloy electrodes	Article No. 7ME6820- ● ● ● ● ● - ● ● ● ●
Click on the Article No. for the online configuration in the PIA Life Cycle Portal.	
Diameter	
DN 50, 2 inch	2 Y
DN 65, 2½ inch	3 F
DN 80, 3 inch	3 M
DN 100, 4 inch	3 T
DN 125, 5 inch	4 B
DN 150, 6 inch	4 H
DN 200, 8 inch	4 P
DN 250, 10 inch	4 V
DN 300, 12 inch	5 D
DN 350, 14 inch	5 K
DN 400, 16 inch	5 R
DN 450, 18 inch	5 Y
DN 500, 20 inch	6 F
DN 600, 24 inch	6 P
Flange norm and pressure rating	
EN 1092-1, PN 10 flanges	B
EN 1092-1, PN 16 flanges	C
ANSI B16.5, Class 150 flanges	J
AS 4087, PN 16 flanges	N
Sensor version	
EPDM liner and Hastelloy electrodes, corrosion-resistant coating of category C4	0
EPDM liner and Hastelloy electrodes, 300 µm corrosion-resistant coating of category C5	4
Approval/Verification[2]	
Standard calibration (without initial verification)[3]	0
MI-001 Q3/Q1 = 40	1
MI-001 Q3/Q1 = 63	2
MI-001 Q3/Q1 = 80	3
MI-001 Q3/Q1 = 160	4
MI-001 Q3/Q1 = 200	5
MI-001 Q3/Q1 = 250	6
MI-001 Q3/Q1 = 100	7
According to OIML R 49 Class II Q3/Q1 = 250 without sealing	8
Region version	
Europe (m^3, m^3/h, 50 Hz)	1
USA (m^3, m^3/h, 60 Hz)	2
Transmitter type and installation	
Basic version integral on sensor	A
Basic version, remote cables mounted on sensor with IP68/NEMA 6P plugs	
• 5 m (16.4 ft)	B
• 10 m (32.8 ft)	C
• 20 m (65.6 ft)	D
• 30 m (98.4 ft)	E
Advanced version integral on sensor	K
Advanced version, remote cables mounted on sensor with IP68/NEMA 6P plugs	
• 5 m (16.4 ft)	L
• 10 m (32.8 ft)	M
• 20 m (65.6 ft)	N
• 30 m (98.4 ft)	P
Communication interface	
No additional "add-on" communication module installed	A
Serial RS 485 with Modbus RTU (Terminated as end device)	B

Selection and ordering data (continued)

SITRANS FM MAG 8000 CT water meter with EPDM liner and Hastelloy electrodes	Article No. 7ME6820- ● ● ● ● ● - ● ● ● ●
Serial RS 232 with Modbus RTU	C
Encoder interface for ITRON 200WP radio with "Sensus" protocol"	D
IIoT Wireless Communication Module with remote antenna including cable 5 m (16.4 ft)[1]	L
IIoT Wireless Communication Module with remote antenna including cable 5 m (16.4 ft) and connection cable 2.5 m (8.2 ft) for analog inputs[1]	N
3G/UMTS communication module with remote antenna; cable 5 m (16.4 ft)[1]	S
3G/UMTS communication module with analog inputs and remote antenna; cable 5 m (16.4 ft)[1]	T
Power supply	
Internal battery (battery not included)	0
Internal battery pack installed[1]	1
Power cable 1.5 m (4.9 ft) with IP68/NEMA 6P plugs for external battery (battery not included)	2
12/24 V AC/DC power supply with battery backup and 3 m (9.8 ft) power cable for external connection (battery not included)	3
115 ... 230 V AC power supply with battery backup and 3 m (9.8 ft) power cable for external connection (battery not included)	4

1) Lithium batteries are subject to special transportation regulations according to United Nations "Regulation of Dangerous Goods, UN 3090 and UN 3091". Special transport documentation is required to observe these regulations. This may influence both transport time and costs.
2) For more details and references of the ranges please see the tables on the previous pages.
3) Standard calibration or according to FM Fire Service requirements if P20, P21 or P22 is selected as Z option.

	Order code
Options	
Please add "**-Z**" to Article No. and specify Order code(s) and plain text.	
Certificate	
Inspection certificate 3.1 (EN 10204) - pressure test	**C01**
Material certificate according to EN 10204-3.1[1]	**C12**
Totalizer Volume calculation (default totalizer 1= forward and totalizer 2 = reverse)	
Totalizer 1 = RV, reverse flow	**L20**
Totalizer 1 = NET, net flow	**L22**
Totalizer 2 = FW, forward flow	**L30**
Totalizer 2 = NET, net flow	**L31**
Pulse set up (default pulse A = forward and pulse B = Alarm, pulse width = 50 ms)	
A function = RV, reverse flow	**L62**
A function = FWnet, forward net flow	**L63**
A function = RVnet, reverse net flow	**L64**
A function = Off	**L65**
Volume per pulse A = × 0.001[2]	**L71**
Volume per pulse A = × 0.01[2]	**L72**
Volume per pulse A = × 0.1[2]	**L73**
Volume per pulse A = × 1[2]	**L74**
B function = FW, forward flow	**L80**
B function = RV, reverse flow	**L81**
B function = FWnet, forward net flow	**L82**
B function = RVnet, reverse net flow	**L83**
B function = Alarm	**L84**
B function = Call up	**L85**
Volume per pulse B = × 0.001[2]	**L91**
Volume per pulse B = × 0.01[2]	**L92**
Volume per pulse B = × 0.1[2]	**L93**
Volume per pulse B = × 1[2]	**L94**

	Order code
Data logger set up (default month logging)	
DataloggerInterval = Daily	**M31**
DataloggerInterval = Weekly	**M32**
Factory mounted cables	
4.8 m (15.75 ft) pulse cable A+B	**M81**
4.8 m (15.75 ft) communication cable RS 232/RS 485 terminated as end device	**M82**
20 m (65.6 ft) pulse cable A+B	**M84**
20 m (65.6 ft) communication cable RS 232/RS 485 terminated as end device	**M85**
Cello 2 channel, input cable 3 m (9.84 ft) with Brad Harrison micro-change 3 way connector	**M87**
Cello 2 channel, input cable 5 m (16.4 ft) with MIL-C-26482 spec. connectors	**M89**
Encoder interface cable with connector for ITRON 200WP radio, length 25 ft (7.6 m)	**M90**
Encoder interface cable with connector for ITRON 200WP radio, length 5 ft (1.5 m)	**M91**
SOFREL cable 2 m (6.6 ft) for LS42 data logger	**M92**
SOFREL cable 2 m (6.6 ft) for LS-Flow data logger	**M97**
FM Fire Service Approval (with ANSI B16.5 Class 150 flanges)	
DN 50, DN 80 and DN 100 (2", 3" and 4")	**P20**
DN 150 and DN 200 (6" and 8")	**P21**
DN 250 and DN 300 (10" and 12")	**P22**
Customer label	
FP2E marking (France market only)	**C17**
FP2E label (France)	**H20**
DIN 43863 label[1]	**H21**
DIN 43863 label with SWM mark[1]	**H22**
ADDC label	**H23**
Region approval and certificate	
Chinese Type Label	**W06**
KCC label (South Korea)	**W28**

1) Under preparation.
2) Pulse width = 10 ms.

Selection and ordering data (continued)

Operating instructions for SITRANS FM MAG 8000

Description	Article No.
• English	A5E03071515
• German	A5E00740986

All literature is available to download for free, in a range of languages, at http://www.siemens.com/processinstrumentation/documentation

Operating instructions for MAG 8000 3G/UMTS communication module

Description	Article No.
• English	A5E03644134

Technical specifications

MAG 8000 CT for revenue and bulk metering (7ME6820)	
Accuracy	OIML R 49/OIML R 49 MAA accuracy class I for DN 50, DN 350 ... 600 accuracy class II for DN 50 ... 600 MI-001 verification for DN 50 ... 600 (2" ... 24"), with Q3/Q1 = 315 FM Fire Service for DN 50, DN 80, DN 100, DN 150, DN 200, DN 250, and DN 300 (2", 3", 4", 6", 8", 10", and 12") ±1,5% (Q_{min} to Q_{max})[5]
Low flow cut-off (default)	15 mm/s
Media conductivity	Clean water > 20 µs/cm
Temperature	
Ambient	-20 ... +60 °C (-4 ... +140 °F) MI-001: -25 ... +55 °C (-13 ... +131 °F)
Media	0.1 ... 50 °C (32 ... 122 °F)
Storage	-40 ... +70 °C (-22 ... +158 °F)
Enclosure rating	
Remote sensor	IP68 to EN 60529/NEMA 6P, 10 mH_2O continuously
Compact version	IP68 to EN 60529/NEMA 6P, 3 mH_2O for 6 months
Certificates and approvals	
Calibration (standard)	according OIML/MI001
Material certificate EN 10204-3.1	Available when ordering together with meter[1]
Drinking water approvals	• NSF/ANSI Standard 61[2] (cold water) USA • WRAS (BS 6920 cold water) UK • ACS Listed France • DVGW W270 Germany • Belgaqua (B) • MCERTS (GB) • AS/NZS 4020: 2018
Fire Service approval	FM Fire Service (1044)[3]
Metrological approvals	• CPA (CN) • KIWA (NL)
Custody transfer approval	• OIML R 49 and OIML R 49 MAA approval • MI-001 approval (DK-0200-MI001-011)
Conformity	• CEN EN 14154, ISO 4064 • PED: 2014/68/EU[4] For pressure/temperature curves see MAG 3100 • EMC: IEC/EN 61326 • CRN (DN 50 ... 1200 (2" ... 48"))

MAG 8000 CT for revenue and bulk metering (7ME6820)	
Sensor version	Coned sensor: DN 50 ... 300 (2" ... 12") Full bore sensor: DN 350 ... 600 (14" ... 24")
Sensor material	
• Housing and flanges	DN 50 ... 600 (2" ... 24"): Carbon steel ASTM A 105, with corrosion-resistant coating of category C4 or C5 according to ISO 12944-2
• Measuring pipe	DN 350 ... 600 (14" ... 24"): Stainless steel AISI 304/1.4301
Measuring principle	Electromagnetic induction
Excitation frequency	
Basic version	
• Battery-powered	DN 50 ... 150 (2" ... 6"): 1/15 Hz DN 200 ... 600 (8" ... 24"): 1/30 Hz
• Mains-powered	DN 50 ... 150 (2" ... 6"): 6.25 Hz DN 200 ... 600 (8" ... 24"): 3.125 Hz
Advanced version	
• Battery-powered	DN 50 ... 150 (2" ... 6"): 1/15 Hz (adjustable up to 6.25 Hz; reduced battery lifetime) DN 200 ... 600 (8" ... 24"): 1/30 Hz (adjustable up to 3.125 Hz; reduced battery lifetime)
• Mains-powered	DN 50 ... 150 (2" ... 6"): 6.25 Hz DN 200 ... 600 (8" ... 24"): 3.125 Hz
Flanges	
EN 1092-1 (DIN 2501)	PN 10 (145 psi): DN 200 ... 300 (8" ... 12") Flat face PN 10 (145 psi): DN 350 ... 600 (14" ... 24") Raised face[6] PN 16 (232 psi): DN 50 ... 300 (2" ... 12") Flat face[6] PN 16 (232 psi): DN 350 ... 600 (14" ... 24") Raised face PN 40 (580 psi): DN 25 and 40 (½" ... 1½") Flat face
ANSI 16.5	Class 150 (20 bar (290 psi)): 1" ... 12" Flat face Class 150 (20 bar (290 psi)): 14" ... 24" Raised face
AS 4087	PN 16 (232 psi): DN 50 ... 300 (2" ... 12") Flat Face PN 16 (232 psi): DN 350 ... 600 (14" ... 24") Raised face
Liner	EPDM
Electrode and grounding electrodes	Hastelloy C276/2.4819
Grounding straps	Grounding straps are premounted from the factory on each side of the sensor.

1) Has to be ordered with the meter. It is not possible to order the certificate afterwards.
2) Including Annex G
3) Not for sensors with 300 µm coating.
4) For further information on the PED standard and requirements see the section about Pressure Equipment Directive.

Technical specifications (continued)

5) Siemens warrants the measurement accuracy down to a flow velocity of 15 mm/s. For a flow velocity below 15 mm/s, we don't warrant the measurement accuracy.
6) DN ≤ 600 type 01 (SORF); DN > 600 type 11 (WNRF)

MAG 8000 CT (Revenue program) water meter type approval

MAG 8000 CT program is type approved and verified according to international water meter standard OIML R 49. The custody transfer program is approved as Class 1 (DN 50, DN 350 ... 600) and Class 2 (DN 50 ... 600), at different Q3 and Q3/Q1, according to OIML R 49:2013 specification.

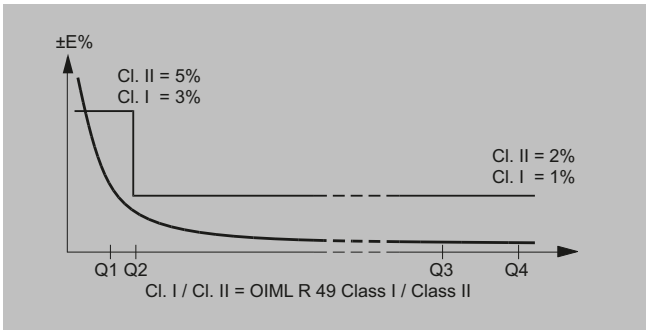

OIML R 49:2013 specification for Class 1 horizontal[1)]

Size	50 (2")	65 (2½")	80 (3")	100 (4")	125 (5")	150 (6")	200 (8")	250 (10")	300 (12")	350 (14")	400 (16")	450 (18")	500 (20")	600 (24")
R (Q^3/Q1)	**200**	**200**	**200**	**200**	**200**	**200**	**200**	**200**	**200**	**125**	**125**	**125**	**125**	**125**
Q4 [m^3/h]	78.75	125	200	312.5	500	787.5	1250	2000	2000	3125	5000	5000	7875	7875
Q3 [m^3/h]	**63**	**100**	**160**	**250**	**400**	**630**	**1000**	**1600**	**1600**	**2500**	**4000**	**4000**	**6300**	**6300**
Q2 [m^3/h]	0.504	0.8	1.28	2	3.2	5.04	8	12.8	12.8	32	51.2	51.2	80.64	80.64
Q1 [m^3/h]	0.315	0.5	0.8	1.25	2	3.15	5	8	8	20	32	32	50.4	50.4

OIML R 49:2013 specification for Class 2 horizontal[1)]

Size	50 (2")	65 (2½")	80 (3")	100 (4")	125 (5")	150 (6")	200 (8")	250 (10")	300 (12")	350 (14")	400 (16")	450 (18")	500 (20")	600 (24")
R (Q^3/Q1)	**315**	**315**	**315**	**315**	**315**	**315**	**315**	**315**	**315**	**200**	**200**	**200**	**200**	**200**
Q4 [m^3/h]	78.75	125	200	312.5	500	787.5	1250	2000	2000	3125	5000	5000	7875	7875
Q3 [m^3/h]	**63**	**100**	**160**	**250**	**400**	**630**	**1000**	**1600**	**1600**	**2500**	**4000**	**4000**	**6300**	**6300**
Q2 [m^3/h]	0.32	0.508	0.813	1.27	2.032	3.2	5.079	8.127	8.127	20	32	32	50.4	50.4
Q1 [m^3/h]	0.2	0.317	0.508	0.794	1.27	2	3.175	5.079	5.079	12.5	20	20	31.5	31.5

1) The product will be delivered according to requested specifications, which may deviate from the specifications of the approval frame described in tables below.

MAG 8000 CT (Revenue program) MI-001

MAG 8000 CT program is type approved according to international water meter standard OIML R 49. Since the first November 2006 the MI-001 water meter directive is in force, which means that all water meters can be sold across the EU borders if the water meters contain a MI-001 label.

The MAG 8000 CT MI-001 verified and labeled products are a Class II approval according to Directive 2014/32/EU of the European Parliament and Council of 26 February, 2014 on measuring instruments, Annex III Water meters (MI-001) in the sizes from DN 50 to DN 600.

The MID certification is obtained as a B + D module approval according to the above mentioned directive.

Module B: Type approval according to OIML R 49

Module D: Quality insurance approval of production

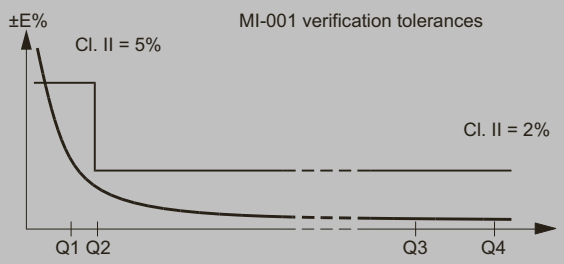

MAG 8000 CT MI-001 verified and labeled products at a given Q3 and Q4/Q3 = 1.25 and Q2/Q1 = 1.6 measuring ranges see below table:

Technical specifications (continued)

7ME6820-xxxx1	DN 50 (2")	DN 65 (21/2")	DN 80 (3")	DN 100 (4")	DN 125 (5")	DN 150 (6")	DN 200 (8")	DN 250 (10")	DN 300 (12")	DN 350 (14")	DN 400 (16")	DN 450 (18")	DN 500 (20")	DN 600 (24")
Straight pipe up/ downstream:	0 x DN									3 x DN				
Orientation:	All orientations									Horizontal & Vertical				
R (Q3/Q1)	40	40	40	40	40	40	40	40	40	40	40	40	40	40
Q4(m³/h)	78,75	125,00	200,00	312,50	500,00	787,50	1250,00	2000,00	2000,00	3125,00	5000,00	5000,00	7875,00	7875,00
Q3(m³/h)	**63**	**100**	**160**	**250**	**400**	**630**	**1000**	**1600**	**1600**	**2500**	**4000**	**4000**	**6300**	**6300**
Q2(m³/h)	2,520	4,000	6,400	10,000	16,000	25,200	40,000	64,000	64,000	100,000	160,000	160,000	252,000	252,000
Q1(m³/h)	1,575	2,500	4,000	6,250	10,000	15,750	25,000	40,000	40,000	62,500	100,000	100,000	157,500	157,500

7ME6820-xxxx2	DN 50 (2")	DN 65 (21/2")	DN 80 (3")	DN 100 (4")	DN 125 (5")	DN 150 (6")	DN 200 (8")	DN 250 (10")	DN 300 (12")	DN 350 (14")	DN 400 (16")	DN 450 (18")	DN 500 (20")	DN 600 (24")
Straight pipe up/ downstream:	0 x DN									3 x DN				
Orientation:	All orientations									Horizontal & Vertical				
R (Q3/Q1)	63	63	63	63	63	63	63	63	63	63	63	63	63	63
Q4(m³/h)	20,00	31,25	50,00	78,75	125,00	200,00	312,50	500,00	787,50	3125,00	5000,00	5000,00	7875,00	7875,00
Q3(m³/h)	**63**	**100**	**160**	**250**	**400**	**630**	**1000**	**1600**	**1600**	**2500**	**4000**	**4000**	**6300**	**6300**
Q2(m³/h)	1,600	2,540	4,063	6,349	10,159	16,000	25,397	40,635	40,635	63,492	101,587	101,587	160,000	160,000
Q1(m³/h)	1,000	1,587	2,540	3,968	6,349	10,000	15,873	25,397	25,397	39,683	63,492	63,492	100,000	100,000

7ME6820-xxxx3	DN 50 (2")	DN 65 (21/2")	DN 80 (3")	DN 100 (4")	DN 125 (5")	DN 150 (6")	DN 200 (8")	DN 250 (10")	DN 300 (12")	DN 350 (14")	DN 400 (16")	DN 450 (18")	DN 500 (20")	DN 600 (24")
Straight pipe up/ downstream:	0 x DN									3 x DN				
Orientation:	All orientations									Horizontal & Vertical				
R (Q3/Q1)	80	80	80	80	80	80	80	80	80	80	80	80	80	80
Q4(m³/h)	31,25	50,00	78,75	125,00	200,00	312,50	500,00	787,50	1250,00	3125,00	5000,00	5000,00	7875,00	7875,00
Q3(m³/h)	**63**	**100**	**160**	**250**	**400**	**630**	**1000**	**1600**	**1600**	**2500**	**4000**	**4000**	**6300**	**6300**
Q2(m³/h)	1,260	2,000	3,200	5,000	8,000	12,600	20,000	32,000	32,000	50,000	80,000	80,000	126,000	126,000
Q1(m³/h)	0,788	1,250	2,000	3,125	5,000	7,875	12,500	20,000	20,000	31,250	50,000	50,000	78,750	78,750

7ME6820-xxxx7	DN 50 (2")	DN 65 (21/2")	DN 80 (3")	DN 100 (4")	DN 125 (5")	DN 150 (6")	DN 200 (8")	DN 250 (10")	DN 300 (12")	DN 350 (14")	DN 400 (16")	DN 450 (18")	DN 500 (20")	DN 600 (24")
Straight pipe up/ downstream:	0 x DN									3 x DN				
Orientation:	All orientations									Horizontal & Vertical				
R (Q3/Q1)	100	100	100	100	100	100	100	100	100	100	100	100	100	100
Q4(m³/h)	31,25	50,00	78,75	125,00	200,00	312,50	500,00	787,50	1250,00	3125,00	5000,00	5000,00	7875,00	7875,00
Q3(m³/h)	**63**	**100**	**160**	**250**	**400**	**630**	**1000**	**1600**	**1600**	**2500**	**4000**	**4000**	**6300**	**6300**
Q2(m³/h)	1,008	1,600	2,560	4,000	6,400	10,080	16,000	25,600	25,600	40,000	64,000	64,000	100,800	100,800
Q1(m³/h)	0,630	1,000	1,600	2,500	4,000	6,300	10,000	16,000	16,000	25,000	40,000	40,000	63,000	63,000

7ME6820-xxxx4	DN 50 (2")	DN 65 (21/2")	DN 80 (3")	DN 100 (4")	DN 125 (5")	DN 150 (6")	DN 200 (8")	DN 250 (10")	DN 300 (12")	DN 350 (14")	DN 400 (16")	DN 450 (18")	DN 500 (20")	DN 600 (24")
Straight pipe up/ downstream:	0 x DN									3 x DN				
Orientation:	Horizontal									Horizontal & Vertical				
R (Q3/Q1)	160	160	160	160	160	160	160	160	160	160	160	160	160	160
Q4(m³/h)	78,75	125,00	200,00	312,50	500,00	787,50	1250,00	2000,00	2000,00	3125,00	5000,00	5000,00	7875,00	7875,00
Q3(m³/h)	**63**	**100**	**160**	**250**	**400**	**630**	**1000**	**1600**	**1600**	**2500**	**4000**	**4000**	**6300**	**6300**
Q2(m³/h)	0,630	1,000	1,600	2,500	4,000	6,300	10,000	16,000	16,000	25,000	40,000	40,000	63,000	63,000
Q1(m³/h)	0,394	0,625	1,000	1,563	2,500	3,938	6,250	10,000	10,000	15,625	25,000	25,000	39,375	39,375

Technical specifications (continued)

7ME6820-xxxx5	DN 50 (2")	DN 65 (21/2")	DN 80 (3")	DN 100 (4")	DN 125 (5")	DN 150 (6")	DN 200 (8")	DN 250 (10")	DN 300 (12")	DN 350 (14")	DN 400 (16")	DN 450 (18")	DN 500 (20")	DN 600 (24")
Straight pipe up/ downstream:	0 x DN									3 x DN				
Orientation:	Horizontal									Horizontal & Vertical				
R (Q3/Q1)	**200**	**200**	**200**	**200**	**200**	**200**	**200**	**200**	**200**	**PVR**				
Q4(m³/h)	78,75	125,00	200,00	312,50	500,00	787,50	1250,00	2000,00	2000,00					
Q3(m³/h)	**63**	**100**	**160**	**250**	**400**	**630**	**1000**	**1600**	**1600**					
Q2(m³/h)	0,504	0,800	1,280	2,000	3,200	5,040	8,000	12,800	12,800					
Q1(m³/h)	0,315	0,500	0,800	1,250	2,000	3,150	5,000	8,000	8,000					

7ME6820-xxxx6	DN 50 (2")	DN 65 (21/2")	DN 80 (3")	DN 100 (4")	DN 125 (5")	DN 150 (6")	DN 200 (8")	DN 250 (10")	DN 300 (12")
Straight pipe up/ downstream:	0 x DN								
Orientation:	Horizontal								
R (Q3/Q1)	**250**	**250**	**250**	**250**	**250**	**250**	**250**	**250**	**250**
Q4(m³/h)	78,75	125,00	200,00	312,50	500,00	787,50	1250,00	2000,00	2000,00
Q3(m³/h)	**63**	**100**	**160**	**250**	**400**	**630**	**1000**	**1600**	**1600**
Q2(m³/h)	0,403	0,640	1,024	1,600	2,560	4,032	6,400	10,240	10,240
Q1(m³/h)	0,252	0,400	0,640	1,000	1,600	2,520	4,000	6,400	6,400

The Label is placed on the side of the encapsulation.

An example of the product label is shown below:

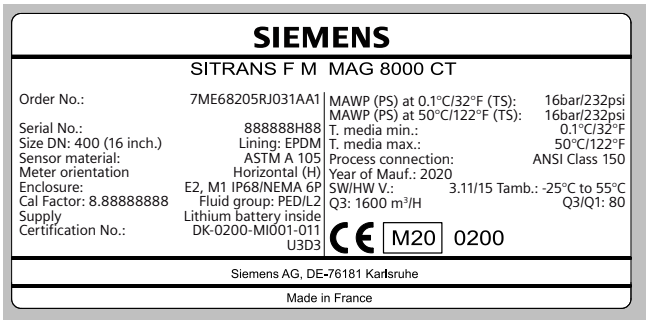

Installation conditions

Please refer to "System information SITRANS FM electromagnetic flowmeters".

Battery operation time and calculation

The battery operation time depends on the connected battery pack as well as the operation condition of the meter.

MAG 8000 calculates the remaining capacity every 4 hours and includes all consuming elements. Calculation compensates for temperature influence on battery capacity (drawing).

MAG 8000 CT (7ME6820) for Fire Service applications

MAG 8000 CT (7ME6820) is FM Fire Service approved for automatic fire protection systems according to the Fire Service Meters Standard, Class Number 1044. The approval is applicable for the sizes 50, DN 80, DN 100, DN 150, DN 200, DN 250, and DN 300 (2", 3", 4", 6", 8", 10", and 12") with ANSI B16.5 Class 150 flanges. The FM Fire Service approved product can be ordered via the Z-options P20, P21 and P22.

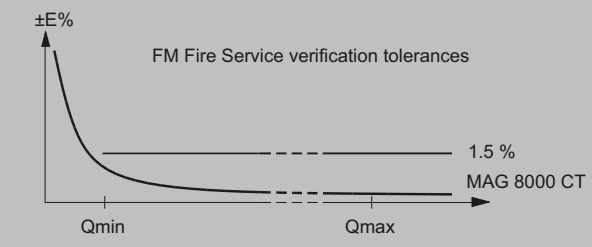

Overview



IIoT Wireless Communication Module

The IIoT Wireless Communication Module[1)] for SITRANS FM MAG 8000 is a communication system consisting of a hardware part combined with a web-hosted application for device management and measurement data transfer. The main features of the module are to transmit periodically the flow readings from a MAG 8000 field device to an end user, real time notifications of alarms, online configuration, and remote diagnosis of the field device.

The IIoT Wireless Communication Module is using the public mobile network as channel for transferring the measurement data to the MAG 8000 IIoT Web Application, where only authorized users have access to. In addition, the IIoT Web Application serves as an interface for the end user to provide the measurement data per Email or FTPS/SFTP.

Communication between the field device and web application runs over MQTT protocol, which is a widely used protocol in the IoT (Internet of Things) world.

The IIoT Wireless Communication Module can be installed in the existing MAG 8000 with SW version 3.11 and higher. A Cat M1, NB-IoT or 2G network must be available at the installation site of the MAG 8000.

1) A rechargeable buffer battery is mandatory, even if the MAG 8000 is mains power operated.

Benefits

The MAG 8000 IIoT Web Application provides options for remote configuration of all MAG 8000 parameters, remote diagnostics, remote qualification and communication via email, FTPS/SFTP (TLS/SSL-based encryption).

This enables data to be received by e-mail or FTPS/SFTP and used for monitoring and control in further systems such as SIWA Leak Finder.

TLS/SSL based data encryption provides a highlevel information security to protect customers data privacy.

The IIoT Wireless Communication Module offers:

- LTE-M and NB-IoT communication with 2G fallback
- Remote Qualification Certificate feature to enable the offsite diagnostic and audit on devices installed anywhere in the world
- 2-channel analog input measurement for external ratiometric pressure transmitter, transmission together with flow measurement (2-in-1 solution)
- Real-time clock synchronization with internet NTP server, ensuring that all measurement data is accurately timestamped
- Data transmission at customer-specified points in time, allowing for synchronization of information from multiple MAG 8000 devices. The package of information retrieved via the csv file includes:
  - Time stamp
  - Flow rate
  - Totalizer 1
  - Totalizer 2
  - Totalizer 3
  - Analog 1 (V)
  - Analog 2 (V)
  - Battery lifetime
  - Alarm list (as decimal format)

Selection and ordering data

Accessories and spare parts for SITRANS FM MAG 8000 IIoT Wireless Communication Module

Description	Article No.	
Upgrade kit MAG 8000 IIoT Wireless Communication Module (LTE-M, NB-IoT, 2G) including module, SIM-Card, antenna, adaptor cable, cable gland, O-ring (without rechargeable battery)	A5E51150447	
MAG 8000 IIoT Wireless Communication Module (LTE-M, NB-IoT, 2G) including SIM-Card (without rechargeable battery)	A5E51093917	
Antenna set for MAG 8000 IIoT WCM PVC, IP68, cable length 5 m (16.4 ft) with SMA male connector (type RG 58) and internal antenna adaptor cable, and single entry cable gland	A5E51198820	
Rechargeable Lithium battery for MAG 8000 IIoT Wirless Communication Module[1)]	A5E03436686	
Analog input cable for MAG 8000 IIoT WCM or 3G WCM 2.5 m (8.2 ft) cable with M12 connector (IP67) A-Coding female 5 pins, and two-entry cable gland	A5E03436698	
Antenna adaptor cable for IIoT WCM or 3G WCM Package: 2 pieces	A5E41896494	
Cable entry 2 ... 5 mm (0.08 ... 0.20") M12 brass glands with M20 reduction Package of 10 pcs, for 3G/UMTS module antenna cable, power cable of external battery pack, encoder card cable	FDK:087L4154	
Two cable entries 3.5 ... 5 mm (0.14 ... 0.20") M20 brass glands Package: 10 pcs	FDK:087L4158	

Selection and ordering data (continued)

Description	Article No.	
Two cable entries 5.5 ... 7.5 mm (0.22 ... 0.30"), M20 brass glands Package: 10 pcs	FDK:087L4159	
Potting kit for terminal box of flow sensors for IP68/NEMA 6P[2)]	FDK:085U0220	

1) Lithium batteries are subject to special transportation regulations according to United Nations "Regulation of Dangerous Goods, UN 3090 and UN 3091". Special transport documentation is required to observe these regulations. This may influence both transport time and costs.

2) Due to its chemical properties, the potting kit cannot be stocked and must be consumed timely. Information on expiry date can be found on the product packaging.

Overview



3G/UMTS communication module



PC-IrDA connection

MAG 8000 3G/UMTS Wireless Communication Module

The 3G/UMTS wireless communication module is a compact built-in solution which can be installed in the existing MAG 8000 with SW version 3.02 and higher, supporting HSDPA cat. 8/HSUPA Cat.6 at 5 UMTS bands, with the ability to fall back to GSM/GPRS network in case there is no 3G signal. The 3G/UMTS module collects comprehensive measurement data from MAG 8000 at an interval down to 1 minute, allows for data transmission via numerous protocols including SMS, email via SMTP, email via SMTPS (TLS/SSL-based encryption), FTP, and FTPS (TLS/SSL-based encryption, implicit), with a customer configurable transmission interval (down to 1 hour). This provides customers with the flexibility to receive data via email, FTP or text message for the monitoring and control systems anywhere in the world.

TLS/SSL based data encryption provides a high level information security to protect customers data privacy.

The 3G/UMTS module offers:

- Remote Qualification Certificate feature to enable the offsite diagnostic and audit on devices installed anywhere in the world
- 2-channel analog input measurement for external ratiometric pressure transmitter, transmission together with flow measurement (2-in-1 solution)
- 4-20 mA alarm signal detection and realtime SMS alarm for tamper protection and flooding situations
- Real-time clock synchronization with internet NTP server, ensuring that all measurement data is accurately timestamped
- Data transmission at customer-specified points in time, allowing for synchronization of information from multiple MAG 8000 devices

The OPC server specifically designed for the MAG 8000 3G/UMTS module is offered free of charge. With this value-added package, the

Overview (continued)

opportunity for measurement data collection and further processing/analyzing for system integration and automation is offered.

The package of information retrieved via the csv file includes:

- Time stamp
- Flow rate
- Tot 1
- Tot 2
- Tot 3
- Analog 1 (mA)
- Analog 2 (V)
- Battery lifetime
- Alarm list (as decimal format)

Electrical installation of 3G/UMTS module

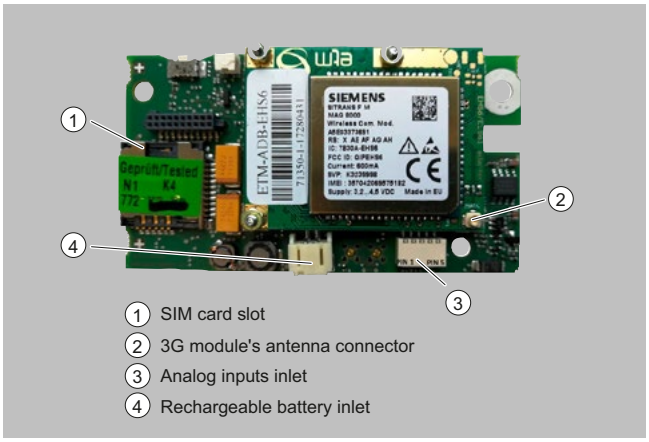

1. SIM card slot
2. 3G module's antenna connector
3. Analog inputs inlet
4. Rechargeable battery inlet

A rechargeable buffer battery is mandatory, even if the MAG 8000 is mains power operated.

Selection and ordering data

Accessories and spare parts for SITRANS FM MAG 8000 3G WCM

Description	Article No.	
MAG 8000 3G/UMTS module Rechargeable battery, antenna and analog cable input must be ordered separately	A5E41011589	
High gain antenna for MAG 8000 3G/UMTS PVC, IP68, cable length 5 m (16.4 ft), with SMA male connector (type RG 58) and internal antenna adaptor cable, and single entry cable gland	A5E40957990	
Rechargeable lithium battery for MAG 8000 IIoT Wirless Communication Module[1)]	A5E03436686	
Analog input cable for MAG 8000 IIoT WCM or 3G WCM 2.5 m (8.2 ft) cable with M12 connector (IP67) A-Coding female 5 pins, and two-entry cable gland	A5E03436698	
Service adaptor for 3G/UMTS module	A5E03436699	
Antenna adaptor cable for IIoT WCM or 3G WCM (2 pieces)	A5E41896494	

Selection and ordering data (continued)

Description	Article No.	
Cable entry 2 ... 5 mm (0.08 ... 0.20") M12 brass glands with M20 reduction Package of 10 pcs, for 3G/UMTS module antenna cable, power cable of external battery pack, encoder card cable.	FDK:087L4154	
Two cable entries 3.5 ... 5 mm (0.14 ... 0.20") M20 brass glands Package: 10 pcs	FDK:087L4158	
Two cable entries 5.5 ... 7.5 mm (0.22 ... 0.30"), M20 brass glands Package: 10 pcs	FDK:087L4159	
Potting kit for terminal box of flow sensors for IP68/NEMA 6P[2]	FDK:085U0220	

[1] Lithium batteries are subject to special transportation regulations according to United Nations "Regulation of Dangerous Goods, UN 3090 and UN 3091". Special transport documentation is required to observe these regulations. This may influence both transport time and costs.

[2] Due to its chemical properties, the potting kit cannot be stocked and must be consumed timely. Information on expiry date can be found on the product packaging.

Selection and ordering data

Accessories

Description	Article No.	
IrDA infrared interface adapter with USB for data acquisition with 1.2 m (3.9 ft) cable	FDK:087L4163	
Battery backup for mains power supply 1 pc. D-cell (3.6 V, 17 Ah)[1)]	A5E03354392	
Internal battery pack one set of 2 D-cell (3.6 V, 34 Ah) and accessories for replacement[1)] incl. NBR O-ring	FDK:087L4150	
Internal battery pack with connector 2 D-cell (3.6 V, 34 Ah), incl. accessories for replacement[1)] and NBR O-ring. Made in Europe.	A5E50698081	 
External battery pack IP68/NEMA 6P with connector 4 D-cell (3.6 V, 68 Ah)[1)]	FDK:087L4151	
External battery pack, IP68/NEMA 6P with connector 4 D-Cell (3.6 V, 68 Ah) without power cable. Made in Europe.[1)]	A5E50698048	
Mains power supply 12 ... 24 V AC/DC (average power consumption during line ≤ 0.1 VA) with battery backup and 3 m (9.8 ft) power cable for external connection (backup battery not included) Temperature range Fixed laying: -40 ... +90 °C (-40 ... +194 °F) Flexible application: -30 ... +80 °C (-22 ... +176 °F)	FDK:087L4210	
Mains power supply 115 ... 230 V AC, 50/60 Hz with battery backup up and 3 m (9.8 ft) power cable for external connection (backup battery not included)	FDK:087L4211	
RS 232 add-on module point to point communication interface with Modbus RTU protocol	FDK:087L4212	
RS 485 add-on module multidrop communication interface with Modbus RTU protocol	FDK:087L4213	

Selection and ordering data (continued)

Description	Article No.	
Encoder interface module with "Sensus" protocol for ITRON 200WP and 100W radio	A5E02475650	
One cable entry 2 ... 5 mm (0.08 ... 0.20 "), M12 brass glands with M20 reduction[2)] Package of 10 pcs, for 3G/UMTS module antenna cable, power cable of external battery pack, encoder card cable.	FDK:087L4154	
One cable entry 6 ... 8 mm (0.24 ... 0.31 "), M20 brass glands package[2)] Package of 10 pcs, for pulse output cable or MODBUS cable, cello cable or mains power supply	FDK:087L4155	
One cable entry 8 ... 11 mm (0.31 ... 0.43 "), M20 brass glands package[2)] Package of 10 pcs, for SOFREL cable	FDK:087L4156	
One cable entry 11 ... 15 mm (0.43 ... 0.59 "), M20 brass glands package[2)] Package of 10 pcs	FDK:087L4157	
Two cable entries 3.5 ... 5 mm (0.14 ... 0.20 "), M20 brass glands package[2)] Package of 10 pcs	FDK:087L4158	
Two cable entries 5.5 ... 7.5 mm (0.22 ... 0.30 "), M20 brass glands package[2)] Package of 10 pcs	FDK:087L4159	
Potting kit for terminal box of flow sensors for IP68/NEMA 6P[3)]	FDK:085U0220	
MAG 8000 Hardware key to access protected parameters	FDK:087L4165	

Selection and ordering data (continued)

Description	Article No.	
MAG 8000 demo - training unit pack operating on Alkaline batteries Transmitter with Flow tool CD, IrDA interface adapter and hardware key (No dangerous goods limitations)	FDK:087L4080	
Alkaline battery for MAG 8000 demo transmitter (3 V 13 Ah) (No dangerous goods limitations)	FDK:087L4142	

1) Lithium batteries are subject to special transportation regulations according to United Nations "Regulation of Dangerous Goods, UN 3090 and UN 3091". Special transport documentation is required to observe these regulations. This may influence both transport time and costs.
2) For cable connection through MAG 8000 transmitter bottom part.
3) Due to its chemical properties, the potting kit cannot be stocked and must be consumed timely. Information on expiry date can be found on the product packaging.

Spare parts

Description	Article No.	
MAG 8000 Programmed (Basic version) transmitter compact replacement kit[1)] No battery included. Programmed. Comes with original product label. System serial number and MLFB required to order.	FDK:087L4166	
MAG 8000 Unprogrammed (Basic version) transmitter compact replacement kit[1)] No battery included. Unprogrammed. Comes with blank product label. No system serial number or MLFB required.	A5E54176714	
MAG 8000 Programmed (Basic version) transmitter remote replacement kit[1)] No battery included. Programmed. Comes with original product label. System serial number and MLFB required to order.	FDK:087L4202	
MAG 8000 Unprogrammed (Basic version) transmitter remote replacement kit[1)] No battery included. Unprogrammed. Comes with blank product label. No system serial number or MLFB required.	A5E54176723	

Selection and ordering data (continued)

Description	Article No.	
MAG 8000 Unprogrammed (Advanced version) transmitter compact replacement kit[1)] No battery included. Unprogrammed. Comes with blank product label. No system serial number or MLFB required.	FDK:087L4203	
MAG 8000 Programmed (Advanced version) transmitter compact replacement kit[1)] No battery included. Programmed. Comes with original product label. System serial number and MLFB required to order.	A5E54176326	
MAG 8000 Unprogrammed (Advanced version) transmitter remote replacement kit[1)] No battery included. Unprogrammed. Comes with blank product label. No system serial number or MLFB required.	FDK:087L4204	
MAG 8000 Programmed (Advanced version) transmitter remoter eplacement kit[1)] No battery included. Programmed. Comes with original product label. System serial number and MLFB required to order.	A5E54176680	
MAG 8000 Unprogrammed (Basic version) transmitter PCB replacement kit[1)] Unprogrammed. No system serial number or MLFB required.	A5E01171569	
MAG 8000 Unprogrammed (advanced version) transmitter PCB replacement kit[1)] Unprogrammed. No system serial number or MLFB required.	FDK:087L4168	
Enclosure top including plastic lid, screws, O-ring and blank product label	FDK:087L4167	
Power cable 1.5 m (4.9 ft) with IP68/NEMA 6P plugs for external battery (no battery included); PE jacket, ambient temperature: -20 °C ... +60 °C (-4 °F ... 140 °F)	FDK:087L4152	
Encoder interface cable with IP68/NEMA 6P plugs included, for ITRON 200WP and 100W radio; 22 AWG stranded TC conductors, polypropylene insulation, twisted pair, overall Beldfoil shield, 22 AWG stranded TC drain wire, PVC jacket		
• Length: 152.4 cm (5 ft)	A5E02551263	

Selection and ordering data (continued)

Description	Article No.	
• Length: 762 cm (25 ft)	A5E02551182	
Service kit package with various components for service and replacement Content: • 10 × plastic top lids • 20 × screws • 10 × wire holders • 10 × battery cups • 10 × greased O-rings • 20 × clamp kits • 10 × IrDA adaptor holding rings	FDK:087L4162	     
Remote cable set with IP68/NEMA 6P plugs, M20, 1 pc. • 5 m (16.4 ft)	A5E00862482	

Selection and ordering data (continued)

Description	Article No.	
• 10 m (32.8 ft)	A5E00862487	
• 20 m (65.6 ft)	A5E00862492	
• 30 m (98.4 ft)	A5E00862497	
Remote cable set, M20 plug with pre-mounted M40 conduit adaptor		
• 10 m (32.8 ft)	A5E33400834	
• 20 m (65.6 ft)	A5E33400836	
Grounding ring kit, flat ring, in stainless steel AISI 316 1.4436, incl. screws, 2 pcs[2)]		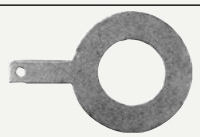
• DN 25 (1")	A5E01002946	
• DN 40 (1½")	A5E01002947	
• DN 50 (2")	A5E01002948	
• DN 65 (2½")	A5E01002950	
• DN 80 (3")	A5E01002952	
• DN 100 (4")	A5E01002953	
• DN 125 (5")	A5E01002954	
• DN 150 (6")	A5E01002955	
• DN 200 (8")	A5E01002957	
• DN 250 (10")	A5E01002958	
• DN 300 (12")	A5E01002962	

1) Not applicable to custody transfer (CT) verified systems without re-verification.
2) When MAG 8000 (7ME6810 and 7ME6820) is installed in PVC or coated pipelines, grounding rings must be installed additionally. Grounding rings, type C must be used for the 7ME6810 and 7ME6820 routes (sizes > DN 300). Please see grounding rings in the section MAG 3100 Grounding rings and be aware that the mentioned MLFB codes include only 1 grounding ring. Grounding rings DN 25 to DN 300 in stainless steel are packed in pairs and sold as a "grounding ring kit".

Operating instructions for SITRANS FM MAG 8000

Description	Article No.
• English	A5E03071515
• German	A5E00740986

All literature is available to download for free, in a range of languages, at www.siemens.com/processinstrumentation/documentation

Operating instructions for MAG 8000 3G/UMTS communication module

Description	Article No.
• English	A5E03644134