SITRANS LVL200

Overview



SITRANS LVL200 is a standard vibrating level switch for material detection in liquid and slurry applications such as overflow, high, low, and demand applications, as well as pump protection. For use in SIL-2 applications.

Benefits

- Proven vibrating level switch technology for liquids
- Compact insertion length of 40 mm (1.57 inch) for confined space applications
- Fault monitoring for corrosion, loss of vibration or line break to the piezo drive
- Functional Safety (SIL 2). Device suitable for use in accordance with IEC 61508 and IEC 61511
- Hygienic process connections
- Suitable for API 2350
- Optional remote test signal conditioner

Application

SITRANS LVL200 is a level switch designed for industrial use in all areas of process technology and can be used with liquids and slurries. With a tuning fork insertion length of only 40 mm (1.57 inch), SITRANS LVL200 can be mounted in small pipes and applications with confined space. The LVL200 can be used to measure products with a minimum density of > 0.5 g/cm³ (0.018 lb/in³). The LVL200 can be used in difficult conditions including turbulence, air bubbles, foam generation, buildup, or external vibration.

SITRANS LVL200 continuously monitors faults via frequency evaluation, providing early detection of strong corrosion or damage on the tuning fork, loss of vibration, or a line break to the piezo drive.

The tuning fork is piezoelectrically energized and vibrates at its mechanical resonance frequency of approximately 1 200 Hz. The vibration frequency changes when the tuning fork is covered by the medium. This change is detected by the integrated oscillator and converted into a switching command. The integrated electronics evaluate the level signal and output a switching signal, directly operating connected devices.

The optional signal conditioner provides a remote test feature to ensure continuous product reliability.

- Key Applications: for use in liquids and slurries, for level measurement, overfill, and dry run protection

Configuration

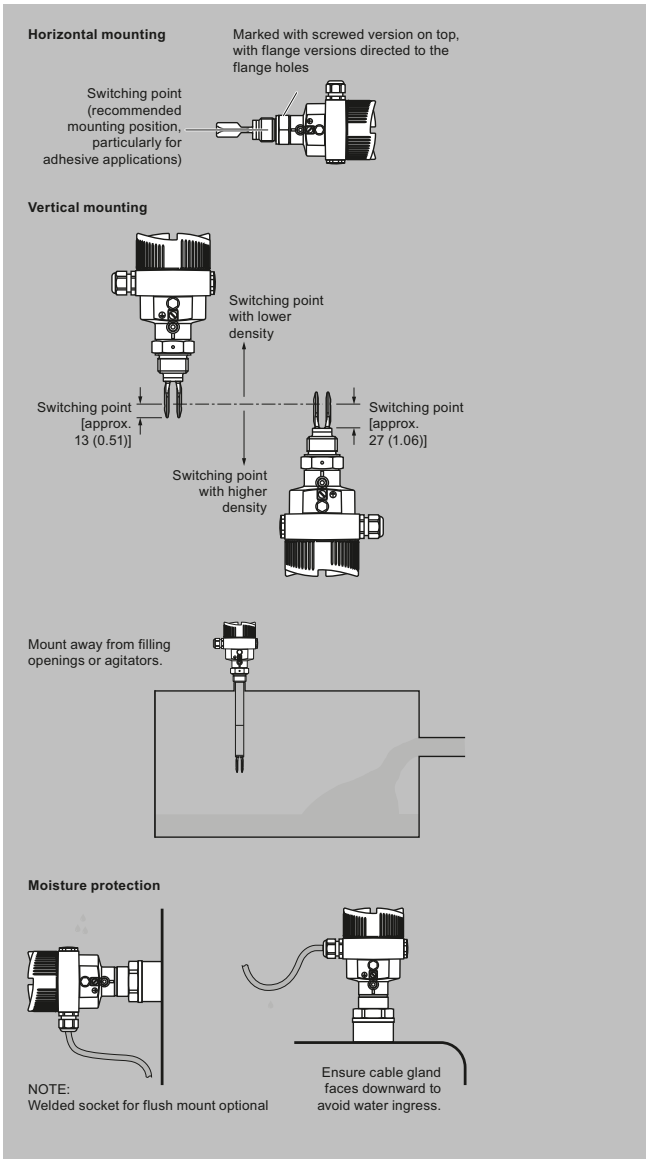

SITRANS LVL200 installation, dimensions in mm (inch)

Selection and ordering data

SITRANS LVL200 Vibrating point level switch, standard design Detects level and material in liquids and slurries. Short insertion. For hazardous applications.	Article No. 7ML5746-	●	●	●	●	●	-	●	●	A	0	Ord. Code ●	●	●
Click on the Article No. for the online configuration in the PIA Life Cycle Portal.														
Electronics														
Contactless electronic switch 20 ... 250 V AC/DC[1)9)24)]		1												
Double relay (DPDT) 20 ... 72 V DC/20 ... 250 V AC[24)]		2												
NAMUR signal[9)]		4												
Transistor (NPN/PNP) 10 ... 55 V DC[1)25)]		5												
Two-wire (8/16 mA) 12 ... 36 V DC[27)]		6												
Approvals														
CE			A											
Overfill protection (WHG)[9)]			B											
ATEX II 1G, ½G, 2G Ex ia IIC T6[6)]			W											
ATEX II 1G, ½G, 2G Ex ia IIC T6 + WHG[6)9)]			C											
ATEX II ½G, 2G Ex d IIC T6 + WHG[5)15)]			D											
ATEX II 1G, ½G, 2G Ex ia IIC T6 + shipping approvals[6)16)]			E											
ATEX II ½G, 2G Ex d IIC T6 + shipping approvals[5)15)]			F											
ATEX II 1G, ½G, 2G Ex ia IIC T6 + ATEX II ½D IP6X T[6)7)17)]			G											
IECEx Ex ia IIC T6[6)18)]			H											
Shipping approvals[16)]			K											
ATEX II 3G Ex nA II T5 ... T1 X[14)19)]			L											
FM (IS) Class I, II, III, Div. 1, Groups A, B, C, D, E, F, G[6)20)]			N											
FM (XP) Class I, Div. 1, Groups A, B, C, D; (DIP) Class II, III, Div. 1, Groups E, F, G[2)5)10)]			P											
FM (NI) Class I, Div. 2, Groups A, B, C, D, CE[21)]			Q											
IECEx d IIC T6 ... T2 Ga/Gb[5)15)]			R											
CSA (XP) Class I, II, III Div. 1, Groups A, B, C, D, E, F, G[5)15)]			S											
CSA (NI) Class I, II, III, Div. 2, Groups A, B, C, D, E, F, G, CE[22)]			T											
BR-Ex d IIC T6 ... T2[5)23)]			U											
CSA (IS) Class I, II, III Div. 1, Groups A, B, C, D, E, F, G[6)9)]			V											
ATEX II ½D, 2D ExtD A20/21, A21 IP6 T...[6)19)]			X											
GOST-R/EAC + ATEX II 1G, ½G, 2G Ex ia IIC T6 + WHG[9)26)]			Z									J	1	A
GOST-R/EAC + ATEX II ½G, Ex d IIC T2 ... T6 + WHG[5)15)28)]			Z									J	1	B
GOST-R/EAC + ATEX II ½G, Ex d IIC T2 ... T6 + Ship approval[5)15)28)]			Z									J	1	C
GOST-R/EAC + ATEX II 1G, ½G, 2G Ex ia IIC T6 + II ½D, 2D ExtD[7)17)28)]			Z									J	1	D
GOST-R/EAC + ATEX II ½D, 2D ExtD A20/21, A21 IP6 T...[17)26)]			Z									J	1	E
Process connection														
Thread G¾" A, PN 64/316L				A	0	0								
Thread G¾" A, PN 64/316L Ra < 0.8 µm				A	0	1								
Thread ¾" NPT, PN 64/316L				A	0	2								
Thread ¾" NPT, PN 64/316L Ra < 0.8 µm				A	0	3								
Thread ¾" NPT, PN 64/Alloy 400 (2.4360)				A	0	4								
Thread G¾" A, PN 64/Alloy C22 (2.4602)				A	0	5								
Thread ¾" NPT, PN 64/Alloy C22 (2.4602)				A	0	6								
Thread G1" A, PN 64/316L				A	0	7								
Thread G1" A, PN 64/316L ECTFE coated MB1982[4)]				A	0	8								
Thread G1" A, PN 64/316L PFA coated[4)]				A	1	0								
Thread G1" A, PN 64/Alloy 400 (2.4360)				A	1	1								
Thread G1" A, PN 64/316L Ra < 0.8 µm				A	1	2								
Thread 1" NPT, PN 64/316L				A	1	3								
Thread 1" NPT, PN 64/316L ECTFE coated MB1982[4)]				A	1	4								
Thread 1" NPT, PN 64/316L PFA-coated[4)]				A	1	5								
Thread 1" NPT, PN 64/Alloy 400 (2.4360)				A	1	6								
Thread 1" NPT, PN 64/316L Ra < 0.8 µm				A	1	7								
Thread G1" A, PN 64/Alloy C22 (2.4602)				A	1	8								
Thread G1" A, PN 64/Alloy C22 (2.4602) Ra < 0.3 µm				A	2	0								
Thread G1½" A, PN 64/316L				A	2	1								

Selection and ordering data (continued)

SITRANS LVL200 Vibrating point level switch, standard design Detects level and material in liquids and slurries. Short insertion. For hazardous applications.	Article No. 7ML5746-	●	●	●	●	●	-	●	●	A	0	Ord. Code ●	●	●
Thread G1½" A, PN 64/316L Ra < 0.8 µm				A	2	2								
Thread G1½" A, PN 64/Alloy C22 (2.4602)				A	2	3								
Thread 1" NPT, PN 64/Alloy C22 (2.4602)				A	2	4								
Thread 1½" NPT, PN 64/316L				A	2	5								
Thread 1½" NPT, PN 64/316L Ra < 0.8 µm				A	2	6								
Thread 1½" NPT, PN 64/Alloy C22 (2.4602)				A	2	7								
Thread G2" A, PN 64/316L				A	2	8								
Thread M27 x 1.5, PN 64/316L				A	3	0								
Conus DN 25, PN 40/316L Ra < 0.3 µm				A	3	1								
Conus DN 25, PN 40/316L Ra < 0.8 µm				A	3	2								
Conus DN 25, PN 40/ECTFE (ZB3033)[4]				A	3	3								
Conus M52, PN 40/316L				A	3	4								
Conus M52, PN 40/316L Ra < 0.3 µm				A	3	5								
Conus M52, PN 40/316L Ra < 0.8 µm				A	3	6								
Tri-Clamp 1", PN 16/316L Ra < 0.3 µm				A	3	7								
Tri-Clamp 1", PN 16/Alloy C22 (2.4602)				A	3	8								
Tri-Clamp 1", PN 16/316L Ra < 0.8 µm				A	4	0								
Tri-Clamp 1½", PN 16/316L Ra < 0.3 µm				A	4	1								
Tri-Clamp 1½", PN 16/Alloy C22 (2.4602)				A	4	2								
Tri-Clamp 1½", PN 16/316L Ra < 0.8 µm				A	4	3								
Tri-Clamp 2", PN 16/316L Ra < 0.3 µm				A	4	4								
Tri-Clamp 2", PN 16/Alloy C22 (2.4602)				A	4	5								
Tri-Clamp 2", PN 16/316L Ra < 0.8 µm				A	4	6								
Tri-Clamp 2½", PN 10/316L Ra < 0.3 µm				A	4	7								
Tri-Clamp 2½", PN 10/316L Ra < 0.8 µm				A	4	8								
Tri-Clamp 3", PN 10/316L Ra < 0.3 µm				A	5	0								
Tri-Clamp 3", PN 10/316L Ra < 0.8 µm				A	5	1								
Bolting DN 32, PN 40 DIN11851/316L Ra < 0.3 µm				A	5	2								
Bolting DN 32, PN 40 DIN11851/316L Ra < 0.8 µm				A	5	3								
Bolting DN 25, PN 40 DIN11851/316L Ra < 0.3 µm				A	5	4								
Bolting DN 25, PN 40 DIN11851/316L Ra < 0.8 µm				A	5	5								
Bolting DN 40, PN 40 DIN11851/316L Ra < 0.3 µm				A	5	6								
Bolting DN 40, PN 40 DIN11851/316L Ra < 0.8 µm				A	5	7								
Bolting DN 40, PN 40 DIN11864-1 A/316L Ra < 0.8 µm ZB3052				A	5	8								
Bolting DN 50, PN 25 DIN11851/316L Ra < 0.3 µm				A	6	0								
Bolting DN 50, PN 25 DIN11851/316L Ra < 0.8 µm				A	6	1								
Bolting DN 50, PN 25 DIN11864-1 A/316L Ra < 0.8 µm ZB3052				A	6	2								
Hygienic w. compr. nut F40, PN 25/316L				A	6	3								
Hygienic w. compr. nut F40, PN 25/316L Ra < 0.3 µm				A	6	4								
Hygienic w. compr. nut F40, PN 25/316L Ra < 0.8 µm				A	6	5								
Varivent N50-40/316L Ra < 0.3 µm				A	6	6								
Varivent N50-40/316L Ra < 0.8 µm				A	6	7								
Varivent N125/100/316L Ra < 0.8 µm				A	6	8								
DRD flange, PN 40/316L ZB3007				A	7	0								
SMS DN 38/316L Ra < 0.8 µm[4]				A	7	1								
SMS DN 51, PN 6/316L Ra < 0.8 µm[4]				A	7	2								
Swagelok VCR screwing ZG2579, PN 64/316L				A	7	3								
Neumo biocontrol size 25, PN 16/316L Ra < 0.8 µm				A	7	4								
Neumo biocontrol size 50, PN 16/316L Ra < 0.8 µm[4]				A	7	5								
Neumo biocontrol size 65, PN 16/316L Ra < 0.8 µm				A	7	6								
Neumo biocontrol size 80, PN 16/316L Ra < 0.8 µm				A	7	7								
SÜDMO DN 50, PN 10/316L Ra < 0.8 µm				A	7	8								
Small flange DN 25, PN 1.5 DIN 28403/316L pol. Ra < 0.8 µm				A	8	0								
Small flange DN 40, PN 1.5 DIN 28403/316L pol. Ra < 0.8 µm				A	8	1								
Ingold connection, PN16/316L a < 0.8 µm (acc. to MB2523)				A	8	2								
Ingold connection, PN 16/Alloy C22 (2.4602) Ra < 0.8 µm (acc. to MB6017)				A	8	3								
Terminal DN 33.7 PN 40 DIN 11864-3-A-/316L BN2 Ra < 0.8 µm[4]				A	8	4								

Selection and ordering data (continued)

SITRANS LVL200 Vibrating point level switch, standard design Detects level and material in liquids and slurries. Short insertion. For hazardous applications.	Article No. 7ML5746-	●	●	●	●	●	-	●	●	A	0	Ord. Code ●	●	●
Hygienic fl. DN 50 PN 16 DIN 11864-2-A-/316L Ra < 0.8 µm				A	8	5								
Flange DN 25, PN 6 Form C, DIN 2501/316L				A	8	6								
Flange DN 25, PN 6 Form C, DIN 2501/PFA[4]				A	8	7								
Flange DN 25, PN 40 Form C, DIN 2501/316L				A	8	8								
Flange DN 25, PN 40 Form C, DIN 2501/Alloy C22 (2.4602)				B	0	0								
Flange DN 25, PN 40 Form C, DIN 2501/ECTFE[4]				B	0	1								
Flange DN 25, PN 40 Form C, DIN 2501/PFA[4]				B	0	2								
Flange DN 25, PN 40 Form C, DIN 2501/Enamelled				B	0	3								
Flange DN 25, PN 40 Form D, DIN 2501/316L				B	0	4								
Flange DN 25, PN 40 Form F, DIN 2501/316L				B	0	5								
Flange DN 25, PN 40 Form N, DIN 2501/316L				B	0	6								
Flange DN 25, PN 40 Form N, DIN 2501/Alloy C22 (2.4602)				B	0	7								
Flange DN 25, PN 40 Form N, DIN 2501/Alloy 400 (2.4360) solid				B	0	8								
Flange DN 25, PN 40 V13, DIN 2501/316L				B	1	0								
Flange DN 32, PN 40 Form C, DIN 2501/316L				B	1	1								
Flange DN 32, PN 40 Form C, DIN 2501/ECTFE[4]				B	1	2								
Flange DN 40, PN 6 Form C, DIN 2501/316L				B	1	3								
Flange DN 40, PN 6 Form C, DIN 2501/ECTFE[4]				B	1	4								
Flange DN 40, PN 40 Form C, DIN 2501/316L				B	1	5								
Flange DN 40, PN 40 Form C, DIN 2501/Alloy C22 (2.4602)				B	1	6								
Flange DN 40, PN 40 Form C, DIN 2501/ECTFE[4]				B	1	7								
Flange DN 40, PN 40 Form C, DIN 2501/PFA[4]				B	1	8								
Flange DN 40, PN 40 Form C, DIN 2501/Enamelled[3]				B	2	0								
Flange DN 40, PN 40 Form F, DIN 2501/316L				B	2	1								
Flange DN 40, PN 40 Form N, DIN 2501/316L				B	2	2								
Flange DN 40, PN 40 Form E, DIN 2501/316L				B	2	3								
Flange DN 40, PN 40 V13, DIN 2501/316L				B	2	4								
Flange DN 50, PN 40 Form C, DIN 2501/316L				B	2	5								
Flange DN 50, PN 40 Form C, DIN 2501/Alloy C22 (2.4602)				B	2	6								
Flange DN 50, PN 40 Form C, DIN 2501/ECTFE[4]				B	2	7								
Flange DN 50, PN 40 Form C, DIN 2501/ECTFE (ZB3108)[4]				B	2	8								
Flange DN 50, PN 40 Form C, DIN 2501/PFA[4]				B	3	0								
Flange DN 50, PN 40 Form D, DIN 2501/316L				B	3	1								
Flange DN 50, PN 40 Form D, DIN 2501/Alloy C22 (2.4602)				B	3	2								
Flange DN 50, PN 40 Form F, DIN 2501/316L				B	3	3								
Flange DN 50, PN 40 Form N, DIN 2501/316L				B	3	4								
Flange DN 50, PN 40 Form N, DIN 2501/Alloy C22 (2.4602)				B	3	5								
Flange DN 50, PN 40 Form E, DIN 2501/316L				B	3	6								
Flange DN 50, PN 40 V13, DIN 2501/316L				B	3	7								
Flange DN 50, PN 40 R13, DIN 2501/316L				B	3	8								
Flange DN 50, PN 64 Form F, DIN 2501/316L				B	4	0								
Flange DN 50, PN 64 Form N, DIN 2501/Alloy C22 (2.4602)				B	4	1								
Flange DN 50, PN 64 Form C, DIN 2501/316L				B	4	2								
Flange DN 50, PN 64 Form L, DIN 2501/316L				B	4	3								
Flange DN 50, PN 100 Form E, DIN 2501/316L				B	4	4								
Flange DN 50, PN 100 Form L, DIN 2501/316L				B	4	5								
Flange DN 65, PN 40 Form C, DIN 2501/316L				B	4	6								
Flange DN 65, PN 40 Form C, DIN 2501/Alloy C22 (2.4602)				B	4	7								
Flange DN 65, PN 40 Form C, DIN 2501/ECTFE[4]				B	4	8								
Flange DN 65, PN 40 Form C, DIN 2501/PFA[4]				B	5	0								
Flange DN 65, PN 40 Form F, DIN 2501/316L				B	5	1								
Flange DN 65, PN 64 Form E, DIN 2501/316L				B	5	2								
Flange DN 80, PN 40 Form C, DIN 2501/316L				B	5	3								
Flange DN 80, PN 40 Form C, DIN 2501/Alloy C22 (2.4602)				B	5	4								
Flange DN 80, PN 40 Form C, DIN 2501/ECTFE[4]				B	5	5								
Flange DN 80, PN 40 Form C, DIN 2501/PFA[4]				B	5	6								
Flange DN 80, PN 40 Form C, DIN 2501/Enamelled[3]				B	5	7								

Selection and ordering data (continued)

SITRANS LVL200 Vibrating point level switch, standard design Detects level and material in liquids and slurries. Short insertion. For hazardous applications.	Article No. 7ML5746-	●	●	●	●	●	-	●	●	A	0	Ord. Code ●	●	●
Flange DN 80, PN 40 Form F, DIN 2501/316L				B	5	8								
Flange DN 80, PN 40 Form N, DIN 2501/316L				B	6	0								
Flange DN 100, PN 16 Form C, DIN 2501/316L				B	6	2								
Flange DN 100, PN 16 Form C, DIN 2501/Alloy C22 (2.4602)				B	6	3								
Flange DN 100, PN 16 Form C, DIN 2501/ECTFE[4]				B	6	4								
Flange DN 100, PN 16 Form C, DIN 2501/PFA[4]				B	6	5								
Flange DN 100, PN 16 Form C, DIN 2501/Enamelled[3]				B	6	6								
Flange DN 100, PN 16 Form D, DIN 2501/316L				B	6	7								
Flange DN 100, PN 16 Form F, DIN 2501/316L				B	6	8								
Flange DN 100, PN 16 Form N, DIN 2501/316L				B	7	0								
Flange DN 100, PN 40 Form C, DIN 2501/316L				B	7	1								
Flange DN 100, PN 40 Form C, DIN 2501/ECTFE[4]				B	7	2								
Flange DN 100, PN 40 Form C, DIN 2501/PFA[4]				B	7	3								
Flange DN 100, PN 40 Form C, DIN 2501/Enamelled[3]				B	7	4								
Flange DN 100, PN 40 Form F, DIN 2501/316L				B	7	5								
Flange DN 100, PN 40 Form N, DIN 2501/316L				B	7	6								
Flange DN 100, PN 40 V13, DIN 2501/316L				B	7	7								
Flange DN 100, PN 64 Form E, DIN 2501/316L				B	7	8								
Flange DN 100, PN 100 Form E, DIN 2501/316L				B	8	0								
Flange DN 100, PN 100 Form L, DIN 2501/316L				B	8	1								
Flange DN 125, PN 16 Form F, DIN 2501/316L				B	8	2								
Flange DN 125, PN 40 Form C, DIN 2501/316L				B	8	3								
Flange DN 125, PN 40 Form N, DIN 2512/ 316L				B	8	4								
Flange DN 150, PN 16 Form C, DIN 2501/316L				B	8	5								
Flange DN 150, PN 16 Form C, DIN 2501/Alloy C22 (2.4602)				B	8	6								
Flange DN 150, PN 16 Form C, DIN 2501/ECTFE[4]				B	8	7								
Flange DN 150, PN 16 Form C, DIN 2501/PFA[4]				B	8	8								
Flange DN 150, PN 16 Form D, DIN 2501/316L				C	0	0								
Flange DN 150, PN 40 Form C, DIN 2501/316L				C	0	1								
Flange DN 150, PN 40 Form C, DIN 2501/Alloy C22 (2.4602)				C	0	2								
Flange DN 150, PN 40 Form F, DIN 2501/316L				C	0	3								
Flange DN 150, PN 40 Form N, DIN 2512/316L				C	0	4								
Flange DN 200, PN 10 Form C, DIN 2501/ECTFE[4]				C	0	5								
Flange DN 200, PN 16 Form C, DIN 2501/316L				C	0	6								
Flange DN 25, PN 40 Form B1, EN 1092-1/316L				C	0	7								
Flange DN 25, PN 40 Form B1, EN 1092-1/Alloy C22 (2.4602)				C	0	8								
Flange DN 25, PN 40 Form B1, EN/316L/PFA[4]				C	1	0								
Flange DN 25, PN 40 Form B1, EN 1092-1/Enamelled[3]				C	1	1								
Flange DN 25, PN 40 Form B2, EN 1092-1/316L				C	1	2								
Flange DN 25, PN 40 Form F, EN 1092-1/316L				C	1	3								
Flange DN 25, PN 63 Form B1, EN 1092-1/316L				C	1	4								
Flange DN 25, PN 100 Form B2, EN 1092-1/316L				C	1	5								
Flange DN 40, PN 40 Form B1, EN/316L				C	1	6								
Flange DN 40, PN 40 Form B1, EN 1092-1/PFA[4]				C	1	7								
Flange DN 40, PN 40 Form B2, EN/316L				C	1	8								
Flange DN 50, PN 40 Form B1, EN/316L				C	2	0								
Flange DN 50, PN 40 Form B1, EN 1092-1/Alloy C22 (2.4602)				C	2	1								
Flange DN 50, PN 40 Form B1, EN 1092-1/Alloy 400 (2.4360) ZB2977				C	2	2								
Flange DN 50, PN 40 Form B1, EN 1092-1/ECTFE[4]				C	2	3								
Flange DN 50, PN 40 Form B1, EN/316L/PFA[4]				C	2	4								
Flange DN 50, PN 40 Form B1, EN 1092-1/Enamelled[3]				C	2	5								
Flange DN 50, PN 40 Form C, EN 1092-1/316L				C	2	6								
Flange DN 50, PN 40 Form D, EN/316L				C	2	7								
Flange DN 50, PN 40 Form D, EN 1092-1/Alloy C22 (2.4602)				C	2	8								
Flange DN 50, PN 40 Form B2, EN 1092-1/316L				C	3	0								
Flange DN 50, PN 40 Form E, EN 1092-1/316L				C	3	1								
Flange DN 80, PN 40 Form B1, EN 1092-1/316L				C	3	2								

Selection and ordering data (continued)

SITRANS LVL200 Vibrating point level switch, standard design Detects level and material in liquids and slurries. Short insertion. For hazardous applications.	Article No. 7ML5746-	●	●	●	●	●	-	●	●	A	0	Ord. Code ●	●	●
Flange DN 80, PN 40 Form B1, EN 1092-1/Alloy C22 (2.4602)				C	3	3								
Flange DN 80, PN 40 Form B1, EN 1092-1/ECTFE[4]				C	3	4								
Flange DN 80, PN 40 Form B1, EN 1092-1/Enamelled[3]				C	3	5								
Flange DN 80, PN 40 Form B2, EN 1092-1/316L				C	3	6								
Flange DN 100, PN 16 Form B1, EN 1092-1/316L				C	3	7								
Flange DN 100, PN 16 Form B1, EN 1092-1/Alloy C22 (2.4602)				C	3	8								
Flange DN 100, PN 16 Form B1, EN 1092-1/Enamelled[3]				C	4	0								
Flange DN 100, PN 40 Form B1, EN 1092-1/316L				C	4	1								
Flange DN 100, PN 40 Form B1, EN 1092-1/Enamelled[3]				C	4	2								
Flange DN 100, PN 40 Form C, EN 1092-1/316L				C	4	3								
Flange DN 100, PN 63 Form B2, EN 1092-1/316L				C	4	4								
Flange DN 150, PN 16 Form B1, EN 1092-1/316L				C	4	5								
Flange DN 150, PN 16 Form B1, EN 1092-1/PFA[4]				C	4	6								
Flange DN 150, PN 40 Form B1, EN 1092-1/316L				C	4	7								
Flange DN 150, PN 40 Form B1, EN 1092-1/ECTFE[4]				C	4	8								
Flange DN 150, PN 40 Form B2, EN 1092-1/316L				C	5	0								
Flange 1" 150 lb RF, ASME B16.5/316L				C	5	1								
Flange 1" 150 lb RF, ASME B16.5/Alloy C22 (2.4602)				C	5	2								
Flange 1" 150 lb RF, ASME B16.5/Alloy 400 (2.4360) ZB2977				C	5	3								
Flange 1" 150 lb RF, ASME B16.5/ECTFE[4]				C	5	4								
Flange 1" 150 lb RF, ASME B16.5/PFA[4]				C	5	5								
Flange 1" 150 lb RF, ASME B16.5/Enamelled[3]				C	5	6								
Flange 1" 300 lb RF, ASME B16.5/316L				C	5	7								
Flange 1" 300 lb RF, ASME B16.5/ECTFE[4]				C	5	8								
Flange 1" 600 lb RF, ASME B16.5/316L				C	6	0								
Flange 1½" 150 lb RF, ASME B16.5/316L				C	6	1								
Flange 1½" 150 lb RF, ASME B16.5/Alloy C22 (2.4602)				C	6	2								
Flange 1½" 150 lb RF, ASME B16.5/ECTFE[4]				C	6	3								
Flange 1½" 150 lb RF, ASME B16.5/PFA[4]				C	6	4								
Flange 1½" 150 lb RF, ASME B16.5 Enamelled[3]				C	6	5								
Flange 1½" 150 lb FF, ASME B16.5/ECTFE[4]				C	6	6								
Flange 1½" 300 lb RF, ASME B16.5/316L				C	6	7								
Flange 1½" 300 lb RF, ASME B16.5/Alloy 400 (2.4360) ZB2977				C	6	8								
Flange 1½" 300 lb RF, ASME B16.5/ECTFE[3]				C	7	0								
Flange 1½" 600 lb RF, ASME B16.5/316L				C	7	1								
Flange 2" 150 lb RF, ASME B16.5/316L				C	7	2								
Flange 2" 150 lb RF, ASME B16.5/Alloy C22 (2.4602)				C	7	3								
Flange 2" 150 lb RF, ASME B16.5/Alloy 400 (2.4360) ZB2977				C	7	4								
Flange 2" 150 lb RF, ASME B16.5/ECTFE[4]				C	7	5								
Flange 2" 150 lb RF, ASME B16.5/PFA[4]				C	7	6								
Flange 2" 150 lb RF, ASME B16.5/Enamelled[3]				C	7	7								
Flange 2" 150 lb FF, ASME B16.5/316L				C	7	8								
Flange 2" 150 lb FF, ASME B16.5/ECTF[4]				C	8	0								
Flange 2" 150 lb SG (small groove), ASME B16.5/316L				C	8	1								
Flange 2" 300 lb RF, ASME B16.5/316L				C	8	2								
Flange 2" 300 lb RF, ASME B16.5/Alloy C22 (2.4602)				C	8	3								
Flange 2" 300 lb RF, ASME B16.5/ECTFE[4]				C	8	5								
Flange 2" 300 lb RF, ASME B16.5/PFA[4]				C	8	6								
Flange 2" 300 lb RF, ASME B16.5 Enamelled[3]				C	8	7								
Flange 2" 300 lb RJF, ASME B16.5/316L				C	8	8								
Flange 2" 300 lb ST, ASME B16.5/316L				D	0	0								
Flange 2" 300 lb LG (large groove), ASME B16.5/316L				D	0	1								
Flange 2" 300 lb LT, ASME B16.5/316L				D	0	2								
Flange 2" 600 lb RF, ASME B16.5/316L				D	0	3								
Flange 2" 600 lb RF, ASME B16.5/Alloy 400 (2.4360) ZB2977				D	0	4								
Flange 2" 600 lb RF, ASME B16.5/ECTFE[4]				D	0	5								
Flange 2" 600 lb RJF, ASME B16.5/316L				D	0	6								

Selection and ordering data (continued)

SITRANS LVL200 Vibrating point level switch, standard design Detects level and material in liquids and slurries. Short insertion. For hazardous applications.	Article No. 7ML5746-	●	●	●	●	●	-	●	●	A	0	Ord. Code ●	●	●
Flange 2" 600 lb LG, ASME B16.5/316L				D	0	7								
Flange 2" 900 lb RJF, ASME B16.5/316L				D	0	8								
Flange 2½" 150 lb RF, ASME B16.5/316L				D	1	0								
Flange 2½" 300 lb RF, ASME B16.5/316L				D	1	1								
Flange 3" 150 lb RF, ASME B16.5/316L				D	1	2								
Flange 3" 150 lb RF, ASME B16.5/Alloy C22 (2.4602)				D	1	3								
Flange 3" 150 lb RF, ASME B16.5/ECTFE[4)]				D	1	4								
Flange 3" 150 lb RF, ASME B16.5/PFA[4)]				D	1	5								
Flange 3" 150 lb RF, ASME B16.5/Enamelled[3)]				D	1	6								
Flange 3" 150 lb FF, ASME B16.5/316L				D	1	7								
Flange 3" 150 lb FF, ASME B16.5/ECTFE[4)]				D	1	8								
Flange 3" 150 lb FF, ASME B16.5/PFA[4)]				D	2	0								
Flange 3" 300 lb RF, ASME B16.5/316L				D	2	1								
Flange 3" 300 lb RF, ASME B16.5/Alloy C22 (2.4602)				D	2	2								
Flange 3" 300 lb RF, ASME B16.5/ECTFE[4)]				D	2	3								
Flange 3" 300 lb RF, ASME B16.5/PFA[4)]				D	2	4								
Flange 3" 300 lb RF, ASME B16.5/Enamelled[3)]				D	2	5								
Flange 3" 600 lb RF, ASME B16.5/316L				D	2	6								
Flange 3½" 150 lb RF, ASME B16.5/316L				D	2	7								
Flange 3½" 150 lb RF, ASME B16.5/ECTFE[4)]				D	2	8								
Flange 4" 150 lb RF, ASME B16.5/316L				D	3	0								
Flange 4" 150 lb RF, ASME B16.5/Alloy C22 (2.4602)				D	3	1								
Flange 4" 150 lb RF, ASME B16.5/ECTFE[4)]				D	3	2								
Flange 4" 150 lb RF, ASME B16.5/PFA[4)]				D	3	3								
Flange 4" 150 lb RF, ASME B16.5/Enamelled[3)]				D	3	4								
Flange 4" 150 lb LT, ASME B16.5/316L				D	3	5								
Flange 4" 300 lb RF, ASME B16.5/316L				D	3	6								
Flange 4" 300 lb RF, ASME B16.5/Alloy C22 (2.4602)				D	3	7								
Flange 4" 300 lb RF, ASME B16.5/ECTFE[4)]				D	3	8								
Flange 4" 300 lb RJF, ASME B16.5/316L				D	4	0								
Flange 4" 300 lb LG, ASME B16.5/316L				D	4	1								
Flange 4" 300 lb LT, ASME B16.5/316L				D	4	2								
Flange 4" 600 lb RF, ASME B16.5/316L				D	4	3								
Flange 4" 600 lb RJF, ASME B16.5/316L				D	4	4								
Flange 6" 150 lb RF, ASME B16.5/316L				D	4	5								
Flange 6" 150 lb RF, ASME B16.5/Alloy C22 (2.4602)				D	4	6								
Flange 6" 150 lb RF, ASME B16.5/ECTFE[4)]				D	4	7								
Flange 6" 150 lb RF, ASME B16.5/PFA[4)]				D	4	8								
Flange 6" 150 lb RJF, ASME B16.5/316L				D	5	0								
Flange 6" 300 lb RF, ASME B16.5/316L				D	5	1								
Flange 8" 150 lb RF, ASME B16.5/316L				D	5	2								
Flange 8" 150 lb RF, ASME B16.5/ECTFE[4)]				D	5	3								
Flange 1" BS.10 Table E/316L				D	5	4								
Flange 1" BS.10 Table E/PFA[4)]				D	5	5								
Flange 1½" BS.10 Table E/316L				D	5	6								
Flange 3½" BS.10 Table E/316L				D	5	7								
Flange 4" BS.10 Table E/ECTFE[4)]				D	5	8								
Flange DN 40 10K, JIS/316L				D	6	0								
Flange DN 50 10K, JIS/316L				D	6	1								
Flange DN 80 10K, JIS/316L				D	6	2								
Flange DN 100 10K, JIS/316L				D	6	3								
Thread R1 PN 64, EN 10226-1/316L				D	6	5								
Flange 2" 900 lb RF, ASME B16.5/316L				D	7	0								
Adapter/Process temperature														
Without adapter/-50 ... +150 °C (-58 ... +302 °F)								1						
With adapter/-50 ... +200 °C (-58 ... +392 °F)[13)]								2						

Selection and ordering data (continued)

SITRANS LVL200 Vibrating point level switch, standard design Detects level and material in liquids and slurries. Short insertion. For hazardous applications.	Article No. 7ML5746- ● ● ● ● ● - ● ● A 0	Ord. Code ● ● ●
With adapter/-50 .... +250 °C (-58 ... +482 °F)	3	
With gas-tight leadthrough/-50 ... +150 °C (-58 ... +302 °F)	4	
With gas-tight leadthrough/-50 ... +250 °C (-58 ... +482 °F)	5	
Housing/Cable entry		
Aluminum IP66/IP67/M20 x 1.5	A	
Aluminum IP66/IP67/½" NPT	B	
316L stainless steel (electropolished) IP66/IP67/M20 x 1.5	C	
316L stainless steel (electropolished) IP66/IP67/½" NPT	D	
Plastic single chamber IP66/IP67/M20 x 1.5	E	
Plastic single chamber IP66/IP67/½" NPT	F	
Stainless steel chamber (precision casting) IP66/IP67/M20 x 1.5	G	
Stainless steel chamber (precision casting) IP66/IP67/½" NPT	H	
Aluminum IP66/IP67/M20 x 1.5 Special HARTING plug HAN 7D (bent) according to Tier One (ZB7555)[11]	V	

Selection and Ordering data	Order code
Further designs	
Please add "**-Z**" to Article No. and specify Order code(s).	
Switching status indication with colors red-green[12]	**A21**
Cleaning including Certificate (oil, grease, and silicone free)	**W01**
Identification label (measurement loop) stainless steel: max. 40 characters, add in plain text. To add more than one line, use a coma ","" for line break.	**Y17**
Identification Label (measurement loop) foil: max. 40 characters add in plain text. To add more than one line, use a coma "," for line break.	**Y18**
NACE0175 to 3.1 Material Certificate for material (EN10204 NACE MR 0175)[8] Note: not available with Process Connection and Rigid extension coatings PFA, ECTFE, and Enamel. NACE not available with Hygienic process connections.	**D07**
Material Inspection certificate 3.1 of EN 10204[8]	**C05**
2.2-Factory certificate for material (EN 10204)[8]	**C15**
Functional Safety (SIL 2). Device suitable for use in accordance with IEC 61508 and IEC 61511[8]	**C20**
Dye penetration test, results confirmed via a 3.1 certificate/instrument (EN 10204)[8]	**C13**
Positive material identification test + 3.1 certificate/instrument[8]	**C16**
Roughness test + 3.1 certificate/instrument[8]	**C18**
3.1-Inspection Certificate for instrument with test data (EN 10204)[8]	**C25**
Quality and test plan	**C26**
Inspection certificate 3.1 (EN 10204) - device and pressure test[8]	**C31**
Helium leak test + 3.1 certificate/instrument[8]	**C32**
Ferrite measuring accuracy to DIN 32514-1 + 3.1 certificate/instrument[8]	**C60**
Pressure test according to Norsok + 3.1 certificate/instrument[8]	**C61**
Factory declaration 2.1 (EN 10204) - certificate suitable for tropical regions with all attachment parts of metal	**C65**
Operating Instructions	
All literature is available to download for free, in a range of languages, at http://www.siemens.com/processinstrumentation/documentation	

Spare Parts and Accessories	Article No.
Electronics module SITRANS LVL200 Relay	**7ML1830-1NC**
Electronics module SITRANS LVL200 Contactless	**7ML1930-6AA**
NAMUR spare electronics module	**A5E35817107**
SITRANS SCSC single channel signal conditioner and remote test	**7ML5760**
SITRANS TCSC two channel signal conditioner and remote test	**7ML5761**
LVL200 Threaded Welded Socket	
• G¾" A/316L with FKM Seal	**7ML1930-1EE**
• G1" A/316L with FKM Seal	**7ML1930-1EF**
• M27 x 1.5/316L with FKM Seal	**7ML1930-1EG**
• G¾" A/316L with EPDM Seal	**7ML1930-1EH**
• G1" A/316L with EPDM Seal	**7ML1930-1EJ**
• M27 x 1.5/316L with EPDM Seal	**7ML1930-1EK**

1) Available only with Adapter/Process temperature options 1, 3, 4, and 5.
2) Available only with Housing/Protection/Cable option B.
3) Available only with Adapter/Process Temperature options 1, 2, and 4.
4) Not available with Adapter/Process Temperature options 2, 3, and 5.
5) Not available with Adapter/Process Temperature options 2, 4, and 5.
6) Available only with Electronics options 4 and 6.
7) Not available with ECTFE coated probe options.
8) Listed Certificates are not available with all configurations please contact factory for more information.
9) Not available with Housing/Protection/Cable Option V.
10) Not available with PFA and ECTFE coating options.
11) Available only with Approval option A.
12) Available only with Relay Electronic options and Non-hazardous Approval options.
13) Available only with Enamelled Process connection options.
14) Available only with Electronic options 4, 5, and 6.
15) Available only with Aluminum Housing/Protection/Cable options.
16) Not available with Stainless Steel (electropolished) Housing/Protection/Cable options and certain glands.
17) Not available with Plastic and Stainless Steel (electropolished) Housing/Protection/Cable options and certain glands.
18) Not available with Housing/Protection/Cable options D, and V.
19) Not available with Plastic Housing/Protection/Cable options and certain glands.
20) Not available with Housing/Protection/Cable options A, E, G, and V.
21) Available only with Housing/Protection/Cable options B, D, F, and H.
22) Not available with Housing/Protection/Cable options C and V.
23) Available only with Housing/Protection/Cable options A, B, and H.
24) Not available with Approval options C, E, G, H, L, N, V, W, J1A, J1D, and J1E.

Selection and ordering data (continued)

25) Not available with Approval options C, E, G, H, N, V, W, J1A, J1D, and J1E.
26) Available only with Electronic option 4.
27) Not available with EAC approval options.
28) Not available with Electronic option 6.

SITRANS LVL200 Vibrating point level switch, rigid extension design Detects level and material in liquids and slurries. Top mount, with extension options to 6 m (19.69 ft). Ideal for hazardous applications.	Article No. 7ML5747-	●	●	●	●	●	-	●	●	●	●	Ord. Code ●	●	●
Click on the Article No. for the online configuration in the PIA Life Cycle Portal.														
Electronics														
Contactless electronic switch 20 ... 250 V AC/DC[1)9)14)]		1												
Double relay (DPDT) 20 ... 72 V DC/20 ... 250 V AC[14)]		2												
NAMUR signal[9)]		4												
Transistor (NPN/PNP) 10 ... 55 V DC[1)15)]		5												
Two-wire (8/16 mA) 12 ... 36 V DC[25)]		6												
Approvals														
CE			A											
Overfill protection (WHG)[9)]			B											
ATEX II 1G, ½G, 2G Ex ia IIC T6[6)]			W											
ATEX II 1G, ½G, 2G Ex ia IIC T6 + WHG[6)9)]			C											
ATEX II ½G, 2G Ex d IIC T6 + WHG[5)7)16)]			D											
ATEX II 1G, ½G, 2G Ex ia IIC T6 + shipping approvals[6)17)]			E											
ATEX II ½G, 2G Ex d IIC T6 + shipping approvals[5)7)16)]			F											
ATEX II 1G, ½G, 2G Ex ia IIC T6 + ATEX II ½D IP6X T[6)8)10)18)]			G											
IECEx Ex ia IIC T6[6)19)]			H											
Shipping approvals[17)]			K											
ATEX II 3G Ex nA II T5 ... T1 X			L											
FM (IS) Class I, II, III, Div. 1, Groups A, B, C, D, E, F, G[6)20)]			N											
FM (XP) Class I, Div. 1, Groups A, B, C, D; (DIP) Class II, III, Div. 1, Groups E, F, G[2)5)]			P											
FM (NI) Class I, Div. 2, Groups A, B, C, D[21)]			Q											
IECEx d IIC T6 ... T2 Ga/Gb[5)7)16)]			R											
CSA (XP) Class I, II, III Div. 1, Groups A, B, C, D, E, F, G[2)5)7)]			S											
CSA (NI) Class I, II, III, Div. 2, Groups A, B, C, D, E, F, G[22)]			T											
BR-Ex d IIC T6 ... T2[5)18)]			U											
CSA (IS) Class I, II, III Div. 1, Groups A, B, C, D, E, F, G[6)9)]			V											
ATEX II ½D, 2D ExtD A20/21, A21 IP6 T...[6)10)23)]			X											
GOST-R/EAC + ATEX II 1G, ½G, 2G Ex ia IIC T6 + WHG[9)24)]			Z									J	1	A
GOST-R/EAC + ATEX II ½G, Ex d IIC T2 ... T6 + WHG[5)7)16)26)]			Z									J	1	B
GOST-R/EAC + ATEX II ½G, Ex d IIC T2 ... T6 + Ship approval[5)7)16)26)]			Z									J	1	C
GOST-R/EAC + ATEX II 1G, ½G, 2G Ex ia IIC T6 + II ½D, 2D ExtD[10)18)24)]			Z									J	1	D
GOST-R/EAC + ATEX II ½D, 2D ExtD A20/21, A21 IP6 T...[10)18)24)]			Z									J	1	E
Note: When selecting a Process connection option, process connection coating must match the extension coating and the material and surface roughness type.														
Process connection														
Thread G¾" A, PN 64/316L				A	0	0								
Thread G¾" A, PN 64/316L Ra < 0.8 µm				A	0	1								
Thread ¾" NPT, PN 64/316L				A	0	2								
Thread ¾" NPT, PN 64/316L Ra < 0.8 µm				A	0	3								
Thread ¾" NPT, PN 64/Alloy 400 (2.4360)				A	0	4								
Thread G¾" A, PN 64/Alloy C22 (2.4602)				A	0	5								
Thread ¾" NPT, PN 64/Alloy C22 (2.4602)				A	0	6								
Thread G1" A, PN 64/316L				A	0	7								
Thread G1" A, PN 64/316L ECTFE coated MB1982[4)]				A	0	8								
Thread G1" A, PN 64/316L PFA coated[4)]				A	1	0								
Thread G1" A, PN 64/Alloy 400 (2.4360)				A	1	1								
Thread G1" A, PN 64/316L Ra < 0.8 µm				A	1	3								
Thread 1" NPT, PN 64/316L				A	1	4								
Thread 1" NPT, PN 64/316L ECTFE coated MB1982[4)]				A	1	5								

Selection and ordering data (continued)

SITRANS LVL200 Vibrating point level switch, rigid extension design Detects level and material in liquids and slurries. Top mount, with extension options to 6 m (19.69 ft). Ideal for hazardous applications.	Article No. 7ML5747- ● ● ● ● ● - ● ● ● ●	Ord. Code ● ● ●
Thread 1" NPT, PN 64/316L PFA coated[4]	A 1 6	
Thread 1" NPT, PN 64/Alloy 400 (2.4360)	A 1 7	
Thread 1" NPT, PN 64/316L Ra < 0.8 µm	A 1 8	
Thread G1" A, PN 64/Alloy C22 (2.4602)	A 2 0	
Thread G1½" A, PN 64/316L	A 2 1	
Thread G1½" A, PN 64/316L Ra <0.8 µm	A 2 2	
Thread G1½" A, PN 64/Alloy C22 (2.4602)	A 2 3	
Thread 1" NPT, PN 64/Alloy C22 (2.4602)	A 2 4	
Thread 1½" NPT, PN 64/316L	A 2 5	
Thread 1½" NPT, PN 64/316L Ra < 0.8 µm	A 2 6	
Thread 1½" NPT, PN 64/Alloy C22 (2.4602)	A 2 7	
Thread G2" A, PN 64/316L	A 2 8	
Thread M27 x 1.5 PN 64/316L	A 3 0	
Cyl. socket/316Ti/1.4581 ECTFE coated ZB2984[4]	A 3 1	
Conus DN 25 PN 40/316L Ra < 0.3 µm	A 3 2	
Conus DN 25 PN 40/316L Ra < 0.8 µm	A 3 3	
Conus DN 25 PN 40/ECTFE (ZB3033)[4]	A 3 4	
Conus M52 PN 40/316L	A 3 5	
Conus M52 PN 40/316L Ra < 0.3 µm	A 3 6	
Conus M52 PN 40/316L Ra < 0.8 µm	A 3 7	
Tri-Clamp 1" PN 16/316L Ra < 0.3 µm	A 3 8	
Tri-Clamp 1" PN 16/Alloy C22 (2.4602)	A 4 0	
Tri-Clamp 1" PN 16/316L Ra < 0.8 µm	A 4 1	
Tri-Clamp 1½" PN 16/316L Ra < 0.3 µm	A 4 2	
Tri-Clamp 1½" PN 16/Alloy C22 (2.4602)	A 4 3	
Tri-Clamp 1½" PN 16/316L Ra < 0.8 µm	A 4 4	
Tri-Clamp 2" PN 16/316L Ra < 0.3 µm	A 4 5	
Tri-Clamp 2" PN 16/Alloy C22 (2.4602)	A 4 6	
Tri-Clamp 2" PN 16/316L Ra < 0.8 µm	A 4 7	
Tri-Clamp 2½" PN 10/316L Ra < 0.3 µm	A 4 8	
Tri-Clamp 2½" PN 10/316L Ra < 0.8 µm	A 5 0	
Tri-Clamp 3" PN 10/316L Ra < 0.3 µm	A 5 1	
Clamp 3" PN16 (ø91 mm) DIN32676, ISO2852/ 316L (Ra < 0.8 µm)	A 5 2	
Bolting DN 32 PN 40 DIN 11851/316L Ra < 0.3 µm	A 5 3	
Bolting DN 32 PN 40 DIN 11851/316L Ra < 0.8 µm	A 5 4	
Bolting DN 25 PN 40 DIN 11851/316L Ra < 0.3 µm	A 5 5	
Bolting DN 25 PN 40 DIN 11851/316L Ra < 0.8 µm	A 5 6	
Bolting DN 40 PN 40 DIN 11851/316L Ra < 0.3 µm	A 5 7	
Bolting DN 40 PN 40 DIN 11851/316L Ra < 0.8 µm	A 5 8	
Bolting DN 40 PN 40 DIN 11864-1 A/316L Ra < 0.8 µm ZB3052	A 6 0	
Bolting DN 50 PN 25 DIN 11851/316L Ra < 0.3 µm	A 6 1	
Bolting DN 50 PN 25 DIN 11851/316L Ra < 0.8 µm	A 6 2	
Bolting DN 50 PN 25 DIN 11864-1 A/316L Ra < 0.8 µm ZB3052	A 6 3	
Hygienic w.compr.nut F40 PN 25/316L	A 6 4	
Hygienic w.compr.nut F40 PN 25/316L Ra < 0.3 µm	A 6 5	
Hygienic w.compr.nut F40 PN 25/316L Ra < 0.8 µm	A 6 6	
Varivent N50-40/316L Ra < 0.3 µm	A 6 7	
Varivent N50-40/316L Ra < 0.8 µm	A 6 8	
Varivent N125/100/316L Ra < 0.8 µm	A 7 0	
DRD flange PN 40/316L ZB3007	A 7 1	
SMS DN 38/316L Ra < 0.8 µm[4]	A 7 2	
SMS DN 51 PN 6/316L Ra < 0.8 µm[4]	A 7 3	
Swagelok VCR screwing ZG2579 PN 64/316L	A 7 4	
Neumo biocontrol size 25 PN 16/316L Ra < 0.8 µm	A 7 5	

Selection and ordering data (continued)

SITRANS LVL200 Vibrating point level switch, rigid extension design Detects level and material in liquids and slurries. Top mount, with extension options to 6 m (19.69 ft). Ideal for hazardous applications.	Article No. 7ML5747- ● ● ● ● ● - ● ● ● ●	Ord. Code ● ● ●
Neumo biocontrol size 50 PN 16/316L Ra < 0.8 µm	A 7 6	
SÜDMO DN 50 PN 10/316L Ra < 0.8 µm	A 8 0	
Small flange DN 25 PN 1.5 DIN 28403/316L pol. Ra < 0.8 µm	A 8 1	
Small flange DN 40 PN 1.5 DIN 28403/316L pol. Ra < 0.8 µm	A 8 2	
Ingold connection PN 16/316L Ra < 0.8 µm	A 8 3	
Collar clamp connection DN 33,7 PN 40 Form A, DIN 11864-3/1.4435 (BN2, Ra < 0.8 µm)	A 8 4	
Collar flange DN 50 PN 16 Form A, DIN 11864-2/316L (Ra < 0.8 µm)	A 8 5	
Flange DN 25 PN 6 Form C, DIN 2501/316L	A 8 6	
Flange DN 25 PN 6 Form C, DIN 2501/PFA[4)]	A 8 7	
Flange DN 25 PN 40 Form C, DIN 2501/316L	A 8 8	
Flange DN 25 PN 40 Form C, DIN 2501/Alloy C22 (2.4602) plated	B 0 0	
Flange DN 25 PN 40 Form C, DIN 2501/ECTFE[4)]	B 0 1	
Flange DN 25 PN 40 Form C, DIN 2501/PFA[4)]	B 0 2	
Flange DN 25 PN 40 Form D, DIN 2501/316L	B 0 3	
Flange DN 25 PN 40 Form F, DIN 2501/316L	B 0 4	
Flange DN 25 PN 40 Form N, DIN 2501/316L	B 0 5	
Flange DN 25 PN 40 Form N, DIN 2501/Alloy 400 (2.4360) solid	B 0 7	
Flange DN 25 PN 40 V13, DIN 2501/316L	B 0 8	
Flange DN 32 PN 40 Form C, DIN 2501/316L	B 1 0	
Flange DN 32 PN 40 Form C, DIN 2501/ECTFE[4)]	B 1 1	
Flange DN 40 PN 6 Form C, DIN 2501/316L	B 1 2	
Flange DN 40 PN 6 Form C, DIN 2501/ECTFE[4)]	B 1 3	
Flange DN 40 PN 40 Form C, DIN 2501/316L	B 1 4	
Flange DN 40 PN 40 Form C, DIN 2501/Alloy C22 (2.4602) plated	B 1 5	
Flange DN 40 PN 40 Form C, DIN 2501/ECTFE[4)]	B 1 6	
Flange DN 40 PN 40 Form C, DIN 2501/PFA[4)]	B 1 7	
Flange DN 40 PN 40 Form C, DIN 2501/Enamelled[3)]	B 1 8	
Flange DN 40 PN 40 Form F, DIN 2501/316L	B 2 0	
Flange DN 40 PN 40 Form N, DIN 2501/316L	B 2 1	
Flange DN 40 PN 40 Form E, DIN 2501/316L	B 2 2	
Flange DN 40 PN 40 V13, DIN 2501/316L	B 2 3	
Flange DN 50 PN 40 Form C, DIN 2501/316L	B 2 4	
Flange DN 50 PN 40 Form C, DIN 2501/Alloy C22 (2.4602) plated	B 2 5	
Flange DN 50 PN 40 Form C, DIN 2501/ECTFE[4)]	B 2 6	
Flange DN 50 PN 40 Form C, DIN 2501/ECTFE (ZB3108)[4)]	B 2 7	
Flange DN 50 PN 40 Form C, DIN 2501/PFA[4)]	B 2 8	
Flange DN 50 PN 40 Form D, DIN 2501/316L	B 3 0	
Flange DN 50 PN 40 Form D, DIN 2501/Alloy C22 (2.4602)	B 3 1	
Flange DN 50 PN 40 Form F, DIN 2501/316L	B 3 2	
Flange DN 50 PN 40 Form N, DIN 2501/316L	B 3 3	
Flange DN 50 PN 40 Form N, DIN 2501/Alloy C22 (2.4602) solid	B 3 4	
Flange DN 50 PN 40 Form E, DIN 2501/316L	B 3 5	
Flange DN 50 PN 40 V13, DIN 2501/316L	B 3 6	
Flange DN 50 PN 40 R13, DIN 2501/316L	B 3 7	
Flange DN 50 PN 64 Form F, DIN 2501/316L	B 3 8	
Flange DN 50 PN 64 Form C, DIN 2501/316L	B 4 1	
Flange DN 50 PN 64 Form L, DIN 2501/316L	B 4 2	
Flange DN 50 PN 100 Form E, DIN 2501/316L	B 4 3	
Flange DN 50 PN 100 Form L, DIN 2501/316L	B 4 4	
Flange DN 65 PN 40 Form C, DIN 2501/316L	B 4 5	
Flange DN 65 PN 40 Form C, DIN 2501/ECTFE[4)]	B 4 7	
Flange DN 65 PN 40 Form C, DIN 2501/PFA[4)]	B 4 8	
Flange DN 65 PN 40 Form F, DIN 2501/316L	B 5 0	
Flange DN 65 PN 64 Form E, DIN 2501/316L	B 5 1	

Selection and ordering data (continued)

SITRANS LVL200 Vibrating point level switch, rigid extension design Detects level and material in liquids and slurries. Top mount, with extension options to 6 m (19.69 ft). Ideal for hazardous applications.	Article No. 7ML5747- ● ● ● ● ● - ● ● ● ●	Ord. Code ● ● ●
Flange DN 80 PN 40 Form C, DIN 2501/316L	B 5 2	
Flange DN 80 PN 40 Form C, DIN 2501/Alloy C22 (2.4602) plated	B 5 3	
Flange DN 80 PN 40 Form C, DIN 2501/ECTFE[4)]	B 5 4	
Flange DN 80 PN 40 Form C, DIN 2501/PFA[4)]	B 5 5	
Flange DN 80 PN 40 Form F, DIN 2501/316L	B 5 6	
Flange DN 80 PN 40 Form N, DIN 2501/316L	B 5 7	
Flange DN 100 PN 16 Form C, DIN 2501/316L	B 6 0	
Flange DN 100 PN 16 Form C, DIN 2501/Alloy C22 (2.4602) plated	B 6 1	
Flange DN 100 PN 16 Form C, DIN 2501/ECTFE[4)]	B 6 2	
Flange DN 100 PN 16 Form C, DIN 2501/PFA[4)]	B 6 3	
Flange DN 100 PN 16 Form D, DIN 2501/316L	B 6 4	
Flange DN 100 PN 16 Form F, DIN 2501/316L	B 6 5	
Flange DN 100 PN 16 Form N, DIN 2501/316L	B 6 6	
Flange DN 100 PN 40 Form C, DIN 2501/316L	B 6 7	
Flange DN 100 PN 40 Form C, DIN 2501/ECTFE[4)]	B 6 8	
Flange DN 100 PN 40 Form C, DIN 2501/PFA[4)]	B 7 0	
Flange DN 100 PN 40 Form C, DIN 2501/Enamelled[3)]	B 7 1	
Flange DN 100 PN 40 Form F, DIN 2501/316L	B 7 2	
Flange DN 100 PN 40 Form N, DIN 2501/316L	B 7 3	
Flange DN 100 PN 40 V13, DIN 2501/316L	B 7 4	
Flange DN 100 PN 64 Form E, DIN 2501/316L	B 7 5	
Flange DN 100 PN 100 Form E, DIN 2501/316L	B 7 6	
Flange DN 100 PN 100 Form L, DIN 2501/316L	B 7 7	
Flange DN 125 PN 16 Form F, DIN 2501/316L	B 7 8	
Flange DN 125 PN 40 Form C, DIN 2501/316L	B 8 0	
Flange DN 125 PN 40 Form N, DIN 2512/316L	B 8 1	
Flange DN 150 PN 16 Form C, DIN 2501/316L	B 8 2	
Flange DN 150 PN 16 Form C, DIN 2501/Alloy C22 (2.4602) plated	B 8 3	
Flange DN 150 PN 16 Form C, DIN 2501/ECTFE[4)]	B 8 4	
Flange DN 150 PN 16 Form C, DIN 2501/PFA[4)]	B 8 5	
Flange DN 150 PN 16 Form D, DIN 2501/316L	B 8 6	
Flange DN 150 PN 40 Form C, DIN 2501/316L	B 8 7	
Flange DN 150 PN 40 Form C, DIN 2501/Alloy C22 (2.4602) plated	B 8 8	
Flange DN 150 PN 40 Form F, DIN 2501/316L	C 0 0	
Flange DN 150 PN 40 Form N, DIN 2512/316L	C 0 1	
Flange DN 200 PN 10 Form C, DIN 2501/ECTFE[4)]	C 0 2	
Flange DN 200 PN 16 Form C, DIN 2501/316L	C 0 3	
Flange DN 25 PN 40 Form B1, EN 1092-1/316L	C 0 4	
Flange DN 25 PN 40 Form B1, EN 1092-1/Alloy C22 (2.4602) plated	C 0 5	
Flange DN 25 PN 40 Form B1, EN/316L/PFA[4)]	C 0 6	
Flange DN 25 PN 40 Form B1, EN 1092-1/Enamelled[3]	C 0 7	
Flange DN 25 PN 40 Form B2, EN 1092-1/316L	C 0 8	
Flange DN 25 PN 40 Form F, EN 1092-1/316L	C 1 0	
Flange DN 25 PN 63 Form B1, EN 1092-1/316L	C 1 1	
Flange DN 25 PN 100 Form B2, EN 1092-1/316L	C 1 2	
Flange DN 40 PN 40 Form B1, EN/316L	C 1 3	
Flange DN 40 PN 40 Form B1, EN 1092-1/PFA[4)]	C 1 4	
Flange DN 40 PN 40 Form B2, EN/316L	C 1 5	
Flange DN 50 PN 40 Form B1, EN/316L	C 1 6	
Flange DN 50 PN 40 Form B1, EN 1092-1/Alloy C22 (2.4602) plated	C 1 7	
Flange DN 50 PN 40 Form B1,EN 1092-1/Alloy 400 (2.4360) ZB2977	C 1 8	
Flange DN 50 PN 40 Form B1, EN 1092-1/ECTFE[4)]	C 2 0	
Flange DN 50 PN 40 Form B1, EN/316L/PFA[4)]	C 2 1	
Flange DN 50 PN 40 Form B1, EN 1092-1/Enamelled[3)]	C 2 2	

Selection and ordering data (continued)

SITRANS LVL200 Vibrating point level switch, rigid extension design Detects level and material in liquids and slurries. Top mount, with extension options to 6 m (19.69 ft). Ideal for hazardous applications.	Article No. 7ML5747- ● ● ● ● ● - ● ● ● ●	Ord. Code ● ● ●
Flange DN 50 PN 40 Form C, EN 1092-1/316L	C 2 3	
Flange DN 50 PN 40 Form D, EN/316L	C 2 4	
Flange DN 50 PN 40 Form B2, EN 1092-1/316L	C 2 6	
Flange DN 50 PN 40 Form E, EN 1092-1/316L	C 2 7	
Flange DN 80 PN 40 Form B1, EN 1092-1/316L	C 2 8	
Flange DN 80 PN 40 Form B1, EN 1092-1/Alloy C22 (2.4602) plated	C 3 0	
Flange DN 80 PN 40 Form B1, EN 1092-1/ECTFE[4)]	C 3 1	
Flange DN 80 PN 40 Form B1, EN 1092-1/Enamelled[3)]	C 3 2	
Flange DN 80 PN 40 Form B2, EN 1092-1/316L	C 3 3	
Flange DN 100 PN 16 Form B1, EN 1092-1/316L	C 3 4	
Flange DN 100 PN 16 Form B1, EN 1092-1/Alloy C22 (2.4602) plated	C 3 5	
Flange DN 100 PN 16 Form B1, EN 1092-1/Enamelled[3)]	C 3 6	
Flange DN 100 PN 40 Form B1, EN 1092-1/316L	C 3 7	
Flange DN 100 PN 40 Form B1, EN 1092-1/Enamelled[3)]	C 3 8	
Flange DN 100 PN 40 Form C, EN 1092-1/316L	C 4 0	
Flange DN 100 PN 63 Form B2, EN 1092-1/316L	C 4 1	
Flange DN 150 PN 16 Form B1, EN 1092-1/316L	C 4 2	
Flange DN 150 PN 16 Form B1, EN 1092-1/PFA[4)]	C 4 3	
Flange DN 150 PN 40 Form B1, EN 1092-1/316L	C 4 4	
Flange DN 150 PN 40 Form B1, EN 1092-1/ECTFE[4)]	C 4 5	
Flange DN 150 PN 40 Form B2, EN 1092-1/316L	C 4 6	
Flange 1" 150 lb ASME B16.5/316L	C 4 7	
Flange 1" 150 lb RF, ASME B16.5/Alloy C22 (2.4602) plated	C 4 8	
Flange 1" 150 lb RF, ASME B16.5/Alloy 400 (2.4360) ZB2977	C 5 0	
Flange 1" 150 lb RF, ASME B16.5/ECTFE[4)]	C 5 1	
Flange 1" 150 lb RF, ASME B16.5/PFA[4)]	C 5 2	
Flange 1" 150 lb RF, ASME B16.5/Enamelled[3)]	C 5 3	
Flange 1" 300 lb RF, ASME B16.5/316L	C 5 4	
Flange 1" 300 lb RF, ASME B16.5/ECTFE[4)]	C 5 5	
Flange 1" 600 lb RF, ASME B16.5/316L	C 5 6	
Flange 1½" 150 lb RF, ASME B16.5/316L	C 5 7	
Flange 1½" 150 lb RF, ASME B16.5/Alloy C22 (2.4602) plated	C 5 8	
Flange 1½" 150 lb RF, ASME B16.5/ECTFE[4)]	C 6 0	
Flange 1½" 150 lb RF, ASME B16.5/PFA[4)]	C 6 1	
Flange 1½" 150 lb RF, ASME B16.5 Enamelled[3)]	C 6 2	
Flange 1½" 150 lb FF, ASME B16.5/ECTFE[4)]	C 6 3	
Flange 1½" 300 lb RF, ASME B16.5/316L	C 6 4	
Flange 1½" 300 lb RF, ASME B16.5/Alloy 400 (2.4360) ZB2977	C 6 5	
Flange 1½" 300 lb RF, ASME B16.5/ECTFE[4)]	C 6 6	
Flange 1½" 600 lb RF, ASME B16.5/316L	C 6 7	
Flange 2" 150 lb RF, ASME B16.5/316L	C 6 8	
Flange 2" 150 lb RF, ASME B16.5/Alloy C22 (2.4602) plated	C 7 0	
Flange 2" 150 lb RF, ASME B16.5/Alloy 400 (2.4360) ZB2977	C 7 1	
Flange 2" 150 lb RF, ASME B16.5/ECTFE[4)]	C 7 2	
Flange 2" 150 lb RF, ASME B16.5/PFA[4)]	C 7 3	
Flange 2" 150 lb RF, ASME B16.5/Enamelled[3)]	C 7 4	
Flange 2" 150 lb FF, ASME B16.5/316L	C 7 5	
Flange 2" 150 lb FF, ASME B16.5/ECTFE[4)]	C 7 6	
Flange 2" 150 lb SG (small groove), ASME B16.5/316L	C 7 7	
Flange 2" 300 lb RF, ASME B16.5/316L	C 7 8	
Flange 2" 300 lb RF, ASME B16.5/Alloy C22 (2.4602) plated	C 8 0	
Flange 2" 300 lb RF, ASME B16.5/ECTFE[4)]	C 8 2	
Flange 2" 300 lb RF, ASME B16.5/PFA[4)]	C 8 3	
Flange 2" 300 lb RJF, ASME B16.5/316L	C 8 5	

Selection and ordering data (continued)

SITRANS LVL200 Vibrating point level switch, rigid extension design Detects level and material in liquids and slurries. Top mount, with extension options to 6 m (19.69 ft). Ideal for hazardous applications.	Article No. 7ML5747- ● ● ● ● ● - ● ● ● ●	Ord. Code ● ● ●
Flange 2" 300 lb ST, ASME B16.5/316L		C 8 6
Flange 2" 300 lb LG (large groove), ASME B16.5/316L		C 8 7
Flange 2" 300 lb LT, ASME B16.5/316L		C 8 8
Flange 2" 600 lb RF, ASME B16.5/316L		D 0 0
Flange 2" 600 lb RF, ASME B16.5/Alloy 400 (2.4360) ZB2977		D 0 1
Flange 2" 600 lb RF, ASME B16.5/ECTFE[4]		D 0 2
Flange 2" 600 lb RJF, ASME B16.5/316L		D 0 3
Flange 2" 600 lb LG, ASME B16.5/316L		D 0 4
Flange 2" 900 lb RJF, ASME B16.5/316L		D 0 5
Flange 2½" 150 lb RF, ASME B16.5/316L		D 0 6
Flange 2½" 300 lb RF, ASME B16.5/316L		D 0 7
Flange 3" 150 lb RF, ASME B16.5/316L		D 0 8
Flange 3" 150 lb RF, ASME B16.5/Alloy C22 (2.4602) plated		D 1 0
Flange 3" 150 lb RF, ASME B16.5/Alloy 400 (2.4360) ZB2977		D 1 1
Flange 3" 150 lb RF, ASME B16.5/ECTFE[4]		D 1 2
Flange 3" 150 lb RF, ASME B16.5/PFA[4]		D 1 3
Flange 3" 150 lb RF, ASME B16.5/Enamelled[3]		D 1 4
Flange 3" 150 lb FF, ASME B16.5/316L		D 1 5
Flange 3" 150 lb FF, ASME B16.5/ECTFE[4]		D 1 6
Flange 3" 150 lb FF, ASME B16.5/PFA[4]		D 1 7
Flange 3" 300 lb RF, ASME B16.5/316L		D 1 8
Flange 3" 300 lb RF, ASME B16.5/Alloy C22 (2.4602) plated		D 2 0
Flange 3" 300 lb RF, ASME B16.5/ECTFE[4]		D 2 1
Flange 3" 300 lb RF, ASME B16.5/PFA[4]		D 2 2
Flange 3" 300 lb RF, ASME B16.5/Enamelled[3]		D 2 3
Flange 3" 600 lb RF, ASME B16.5/316L		D 2 4
Flange 3½" 150 lb RF, ASME B16.5/316L		D 2 5
Flange 3½" 150 lb RF, ASME B16.5/ECTFE[4]		D 2 6
Flange 4" 150 lb RF, ASME B16.5/316L		D 2 7
Flange 4" 150 lb RF, ASME B16.5/Alloy C22 (2.4602) plated		D 2 8
Flange 4" 150 lb RF, ASME B16.5/ECTFE[4]		D 3 0
Flange 4" 150 lb RF, ASME B16.5/PFA[4]		D 3 1
Flange 4" 150 lb RF, ASME B16.5/Enamelled[3]		D 3 2
Flange 4" 150 lb LT, ASME B16.5/316L		D 3 3
Flange 4" 300 lb RF, ASME B16.5/316L		D 3 4
Flange 4" 300 lb RF, ASME B16.5/Alloy C22 (2.4602) plated		D 3 5
Flange 4" 300 lb RF, ASME B16.5/ECTFE[4]		D 3 6
Flange 4" 300 lb RJF, ASME B16.5/316L		D 3 7
Flange 4" 300 lb LG, ASME B16.5/316L		D 3 8
Flange 4" 300 lb LT, ASME B16.5/316L		D 4 0
Flange 4" 600 lb RF, ASME B16.5/316L		D 4 1
Flange 4" 600 lb RJF, ASME B16.5/316L		D 4 2
Flange 5" 150 lb RF, ASME B16.5/316L		D 4 3
Flange 6" 150 lb RF, ASME B16.5/316L		D 4 4
Flange 6" 150 lb RF, ASME B16.5/Alloy C22 (2.4602) plated		D 4 5
Flange 6" 150 lb RF, ASME B16.5/ECTFE[4]		D 4 6
Flange 6" 150 lb RF, ASME B16.5/PFA[4]		D 4 7
Flange 6" 150 lb RJF, ASME B16.5/316L		D 4 8
Flange 6" 300 lb RF, ASME B16.5/316L		D 5 0
Flange 8" 150 lb RF, ASME B16.5/316L		D 5 1
Flange 8" 150 lb RF, ASME B16.5/ECTFE[4]		D 5 2
Flange 1" BS.10 Table E/316L		D 5 3
Flange 1" BS.10 Table E/PFA[4]		D 5 4
Flange 1½" BS.10 Table E/316L		D 5 5

Selection and ordering data (continued)

SITRANS LVL200 Vibrating point level switch, rigid extension design Detects level and material in liquids and slurries. Top mount, with extension options to 6 m (19.69 ft). Ideal for hazardous applications.	Article No. 7ML5747- ● ● ● ● ● - ● ● ● ●	Ord. Code ● ● ●
Flange 3½" BS.10 Table E/316L	D 5 6	
Flange 4" BS.10 Table E/ECTFE[4)]	D 5 7	
Flange DN 40 10K, JIS/316L	D 5 8	
Flange DN 50 10K, JIS/316L	D 6 0	
Flange DN 80 10K, JIS/316L	D 6 1	
Flange DN 100 10K, JIS/316L	D 6 2	
Thread R1 PN 64, EN10226-1/316L[11)]	D 6 5	
Flange 2" 900 lb RF, ASME B16.5/316L	D 7 0	
Flange 4" 150 lb RF, ASME B16.5/Alloy C22 (2.4602) solid	D 7 1	
Flange NPS 2" Class 1500 RJF, ASME B16.5 / 316/316L[26)]	D 7 2	
Adapter/Process temperature		
Without adapter/-50 ... +150 °C	1	
With adapter/-50 ... +200 °C[13)]	2	
With adapter/-50 ... +250 °C	3	
With gas-tight leadthrough/-50 ... +150 °C	4	
With gas-tight leadthrough/-50 ... +250 °C	5	
Housing/Cable entry		
Aluminum IP66/IP67/M20 x 1.5	A	
Aluminum IP66/IP67/½" NPT	B	
316L stainless steel (electropolished) IP66/IP67/M20 x 1.5	C	
316L stainless steel (electropolished) IP66/IP67/½" NPT	D	
Plastic single chamber IP66/IP67/M20 x 1.5	E	
Plastic single chamber IP66/IP67/½" NPT	F	
Stainless steel chamber (precision casting) IP66/IP67/M20 x 1.5	G	
Stainless steel chamber (precision casting) IP66/IP67/½" NPT	H	
Aluminum IP66/IP67/M20 x 1.5 Special HARTING plug HAN 7D (bent) according to Tier One (ZB7555)	V	
NOTE: When selecting a Rigid Extension option, extension coating must match the process connection coating and the material and surface roughness type.		
Rigid Extension 316L		
80 ... 500 mm	A 0	
501 ... 1 000 mm	A 1	
1 001 ... 1 500 mm	A 2	
1 501 ... 2 000 mm	A 3	
2 001 ... 2 500 mm	A 4	
2 501 ... 3 000 mm	A 5	
3 001 ... 3 500 mm	A 6	
3 501 ... 4 000 mm	A 7	
Rigid Extension ECTFE coated		
80 ... 500 mm	B 0	
501 ... 1 000 mm	B 1	
1 001 ... 1 500 mm	B 2	
1 501 ... 2 000 mm	B 3	
2 001 ... 2 500 mm	B 4	
2 501 ... 3 000 mm	B 5	
Rigid Extension PFA coated		
80 ... 500 mm	C 0	
501 ... 1 000 mm	C 1	
1 001 ... 1 500 mm	C 2	
1 501 ... 2 000 mm	C 3	
2 001 ... 2 500 mm	C 4	
2 501 ... 3 000 mm	C 5	
3 001 ... 3 500 mm	C 6	
3 501 ... 4 000 mm	C 7	

Selection and ordering data (continued)

SITRANS LVL200 Vibrating point level switch, rigid extension design Detects level and material in liquids and slurries. Top mount, with extension options to 6 m (19.69 ft). Ideal for hazardous applications.	Article No. 7ML5747- ● ● ● ● ● - ● ● ● ●	Ord. Code ● ● ●
Rigid Extension 316L Ra ≤ 0.8 µm		
80 ... 500 mm	D 0	
501 ... 1 000 mm	D 1	
1 001 ... 1 500 mm	D 2	
1 501 ... 2 000 mm	D 3	
2 001 ... 2 500 mm	D 4	
2 501 ... 3 000 mm	D 5	
3 001 ... 3 500 mm	D 6	
3 501 ... 4 000 mm	D 7	
Rigid Extension 316L Ra ≤ 0.3 µm		
80 ... 500 mm	E 0	
501 ... 1 000 mm	E 1	
1 001 ... 1 500 mm	E 2	
1 501 ... 2 000 mm	E 3	
2 001 ... 2 500 mm	E 4	
2 501 ... 3 000 mm	E 5	
3 001 ... 3 500 mm	E 6	
3 501 ... 4 000 mm	E 7	
Rigid Extension Enamelled version		
80 ... 250 mm	F 0	
251 ... 500 mm	F 1	
501 ... 750 mm	F 2	
751 ... 1 000 mm	F 3	
1 001 ... 1 250 mm	F 4	
1 251 ... 1 500 mm	F 5	
Rigid Extension Alloy C22 (2.4602)		
80 ... 500 mm	G 0	
501 ... 1 000 mm	G 1	
1 001 ... 1 500 mm	G 2	
1 501 ... 2 000 mm	G 3	
2 001 ... 2 500 mm	G 4	
2 501 ... 3 000 mm	G 5	
3 001 ... 3 500 mm	G 6	
3 501 ... 4 000 mm	G 7	
Rigid Extension Alloy 400 (2.4360)		
80 ... 500 mm	H 0	
501 ... 1 000 mm	H 1	
1 001 ... 1 500 mm	H 2	
1 501 ... 2 000 mm	H 3	
2 001 ... 2 500 mm	H 4	
2 501 ... 3 000 mm	H 5	

Selection and Ordering data	Order code
Further designs	
Please add "**-Z**" to Article No. and specify Order code(s).	
Switching status indication with colors red-green[12)]	**A21**
Cleaning including Certificate (oil, grease, and silicone free)	**W01**
Enter the total insertion length in plain text description, max. 4 000 mm (157.48 inch)	**Y01**
Identification label (measurement loop) stainless steel: max. 40 characters, add in plain text. To add more than one line, use a coma "," for line break.	**Y17**

Selection and Ordering data	Order code
Identification label (measurement loop) foil: max. 40 characters add in plain text. To add more than one line, use a coma "," for line break.	**Y18**
NACE0175 to 3.1 Material Certificate for material (EN 10204 NACE MR 0175)[8)] Note: not available with Process connection and Rigid extension coatings PFA, ECTFE, and Enamel. NACE not available with Hygienic process connections.	**D07**
Material Inspection certificate 3.1 of EN 10204	**C05**

Selection and ordering data (continued)

Selection and Ordering data	Order code
2.2-Factory certificate for material (EN 10204)[8]	C15
Functional Safety (SIL 2). Device suitable for use in accordance with IEC 61508 and IEC 61511[8]	C20
Dye penetration test, results confirmed via a 3.1 certificate/instrument (EN 10204)[8]	C13
Positive material identification test + 3.1 certificate/instrument[8]	C16
Roughness test + 3.1 certificate/instrument[8]	C18
3.1-Inspection Certificate for instrument with test data (EN 10204)	C25
Quality and test plan	C26
Inspection certificate 3.1 (EN 10204) - device and pressure test[8]	C31
Helium leak test + 3.1 certificate/instrument[8]	C32
Ferrite measuring accuracy to DIN 32514-1 + 3.1 certificate/instrument[8]	C60
Pressure test according to Norsok + 3.1 certificate/instrument[8]	C61
Factory declaration 2.1 (EN 10204) - certificate suitable for tropical regions with all attachment parts of metal	C65
Operating Instructions	
All literature is available to download for free, in a range of languages, at http://www.siemens.com/processinstrumentation/documentation	

Spare Parts and Accessories	Article No.
Electronics module SITRANS LVL200 Relay	7ML1830-1NC
Electronics module SITRANS LVL200 Contactless	7ML1930-6AA
NAMUR spare electronics module	A5E35817107
SITRANS SCSC single channel signal conditioner and remote test	7ML5760
SITRANS TCSC two channel signal conditioner and remote test	7ML5761
Lock fitting, unpressurized, G1" A/316L	7ML1930-1DQ
Lock fitting, unpressurized, 1" NPT/316L	7ML1930-1DR
Lock fitting, unpressurized, G1 ... 1/2" A/316L	7ML1930-1DS
Lock fitting, unpressurized, 1 ... 1/2" NPT/316L	7ML1930-1DT

Spare Parts and Accessories	Article No.
Lock fitting, -1 ... 16 bar, G1" A/316L	7ML1930-1DU
Lock fitting, -1 ... 16 bar, 1" NPT/316L	7ML1930-1DV
Lock fitting, -1 ... 16 bar, G1 1/2" A/316L	7ML1930-1DW
Lock fitting, -1 ... 16 bar, 1 1/2" NPT/316L	7ML1930-1DX
Lock fitting, -1 ... 64 bar, G1" A/316L	7ML1930-1EA
Lock fitting, -1 ... 64 bar, 1" NPT/316L	7ML1930-1EB
Lock fitting, -1 ... 64 bar, G1 1/2" A/316L	7ML1930-1EC
Lock fitting, -1 ... 64 bar, 1 1/2" NPT/316L	7ML1930-1ED

1) Available only with Adapter/Process temperature options 1, 3, 4, and 5.
2) Available only with Housing/Cable entry option B.
3) Available only with Adapter/Process temperature options 1, 2, and 4.
4) Not available with Adapter/Process temperature options 2, 3, and 5.
5) Not available with Adapter/Process temperature options 2, 4, and 5.
6) Available only with Electronics options 4 and 6.
7) Available only with rigid extension options less than 3 001 mm.
8) Listed Certificates are not available with all configurations please contact factory for more information.
9) Not available with Housing/Protection/Cable option V.
10) Not available with PFA, ECTFE, and enamelled coating options.
11) Available only with some 316L extensions.
12) Available only with relay electronic options and non-hazardous Approval options.
13) Available only with Enamelled Process connection/Material options.
14) Not available with Approval options C, E, G, H, L, N, V, and W.
15) Not available with Approval options C, E, G, H, N, and V.
16) Only available with Aluminum Housing/Protection/Cable options and certain glands.
17) Not available with Stainless Steel Electropolish Housing/Protection/Cable options and certain glands.
18) Not available with Plastic or Stainless Steel Electropolish Housing/Protection/Cable options and certain glands.
19) Not available with Housing/Protection/Cable options D and V.
20) Not available with Housing/Protection/Cable options A, E, G, and V.
21) Not available with some Housing/Protection/Cable gland options.
22) Not available with Housing/Protection/Cable options A, C, and V.
23) Not available with Plastic Housing/Protection/Cable options.
24) Available only with Electronic option 4.
25) Not available with FM approval options.
26) Available only with Rigid extension options A0 ... A7.

SITRANS LVL200 Vibrating point level switch, high temperature and pressure design Detects level and material in liquids and slurries in extreme environments. Extension options to 3 m (9.84 ft).	Article No. 7ML5748- ● ● ● ● ● - ● ● ● ●	Ord. Code ● ● ●
Click on the Article No. for the online configuration in the PIA Life Cycle Portal.		
Version/Material		
Compact version/Inconel 718 (2.4668)[1)2)]	1	
With tube extension/316L and Inconel 718 (2.4668)[1)3)]	2	
With tube extension/Alloy C22 (2.4602) and Inconel 718 (2.4668)[4)]	3	
Approvals		
Europe CE	A	
Ship approval	B	
Overfill protection WHG[7)]	C	
ATEX II ½G, 2G Ex d IIC T6[6)9)]	D	
ATEX II 1G, ½G, 2G Ex ia IIC T6[5)9)]	F	
ATEX II 1G, ½G, 2G Ex ia IIC T6 + ship approval[5)9)10)]	G	
ATEX II 1G, ½G, 2G Ex ia IIC T6 + Overfill protection (WHG)[6)7)9)]	H	
ATEX II ½G, 2G Ex d IIC T6 + Overfill protection (WHG)[6)7)9)]	J	

Selection and ordering data (continued)

SITRANS LVL200 Vibrating point level switch, high temperature and pressure design Detects level and material in liquids and slurries in extreme environments. Extension options to 3 m (9.84 ft).	Article No. 7ML5748- ●	●	●	●	●	-	●	●	●	●	Ord. Code ●	●	●
FM (NI) Class I, Div. 2, Groups A, B, C, D T6 ... T1[9)11)]		N											
FM (NI) Class I, Div. 2, Groups A, B, C, D T6 ... T1 + Ship approval[6)9)]		P											
FM (IS) Class I, Div. 1, Groups A, B, C, D Zone 0, 0/1, 1, AEx ia IIC T6 ... T1 Ga, Ga/Gb, Gb[5)9)12)]		Q											
FM (XP) Class I, Div. 1, Groups A, B, C, D T6 ... T1, Zone 0/1, 1, AEx d IIC T6 ... T1 Ga/Gb, Gb[6)9)]		R											
FM (XP) Class I, Div. 1, Groups A, B, C, D T6 ... T1, Zone 0/1, 1, AEx d IIC T6 ... T1 Ga/Gb, Gb + Ship approval[6)9)]		S											
IEC Ex d IIC T6[6)9)]		E											
IEC Ex ia IIC T6 + Ship approval[5)9)10)]		U											
IEC Ex ia IIC T6[5)9)]		T											
$_{C}CSA_{US}$ (NI) Class I, Div. 2, Groups A, B , C, D, (DIP) Class II, III, Div. 1, Groups E, F, G[6)9)]		V											
$_{C}CSA_{US}$ (NI) Class I, Div. 2, Groups A, B, C, D, (DIP) Class II, III, Div. 1, Groups E, F, G + Ship approval[6)9)]		W											
$_{C}CSA_{US}$ (IS) Class I, II, III, Div. 1, Groups A, B, C, D, E, F, G[5)9)12)]		X											
$_{C}CSA_{US}$ (IS) Class I, II, III, Div. 1, Groups A, B, C, D, E, F, G + Ship approval[5)9)13)]		Y											
$_{C}CSA_{US}$ (XP) Class I, II, III, Div. 1, Groups A, B, C, D, E, F, G[6)9)]		K											
$_{C}CSA_{US}$ (XP) Class I, II, III, Div. 1, Groups A, B, C, D, E, F, G + Ship approval[6)9)]		L											
GOST-R/EAC Ga/Gb Ex ia IIC T6 ... T1 X, 0Ex ia IIC T6 ... T1 Ga, 1Ex ia IIC T6 ... T1 Gb X[5)9)]		Z									J	1	A
GOST-R/EAC 1Ex db IIC T6 ... T1 Gb, Ga/Gb Ex db IIC T6 ... T1[6)9)]		Z									J	1	B
Process connection													
Thread G1 PN 100, DIN 3852-A/316L			A	0									
Thread G1 PN 160, DIN 3852-A/Inconel 718 (2.4668)			A	1									
Thread 1" NPT PN 100, ASME B1.20.1/316L			A	2									
Thread 1" NPT PN 160, ASME B1.20.1/ Inconel 718 (2.4668)			A	3									
Flange DN 50 PN 40 Form C, DIN 2501/316/316			A	4									
Flange DN 50 PN 40 Form C, DIN 2501/316/316L, with Alloy C22 (2.4602) coating			A	5									
Flange DN 50 PN 40 Form N, DIN 2501/316/316L			A	6									
Flange DN 50 PN 40 Form V13, DIN 2501/316/316L			A	7									
Flange DN 50 PN 40 Form V13, DIN 2501/Alloy C22 (2.4602) solid			A	8									
Flange DN 50 PN 40 Form V13, DIN 2501/316/316L, with Alloy C22 (2.4602) coating			B	0									
Flange DN 50 PN 64 Form E, DIN 2501/316/316L			B	1									
Flange DN 50 PN 100 Form C, DIN 2501/316/316L			B	2									
Flange DN 50 PN 100 Form F, DIN 2501/316/316L			B	3									
Flange DN 50 PN 100 Form V13, DIN 2501/316/316L			B	4									
Flange DN 50 PN 160 Form C, DIN 2501/316/316L			B	5									
Flange DN 50 PN 160 Form F, DIN 2501/316/316L			B	6									
Flange DN 65 PN 16 Form C, DIN 2501/316/316L			B	7									
Flange DN 65 PN 40 Form C, DIN 2501/316/316L			B	8									
Flange DN 65 PN 100 Form C, DIN 2501/316/316L			C	0									
Flange DN 80 PN 40 Form C, DIN 2501/316/316L			C	1									
Flange DN 80 PN 100 Form C, DIN 2501/316/316L			C	2									
Flange DN 80 PN 160 Form F, DIN 2501/316/316L			C	3									
Flange DN 80 PN 160 Form L, DIN 2501/316/316L			C	4									
Flange DN 80 PN 250 Form L, DIN 2501/316/316L			C	5									
Flange DN 80 PN 250 Form L, DIN 2501/Alloy C22 (2.4602) solid			C	6									
Flange DN 100 PN 16 Form C, DIN 2501/316/316L			C	7									
Flange DN 100 PN 40 Form C, DIN 2501/316/316L			C	8									
Flange DN 100 PN 100 Form E, DIN 2501/316/316L			D	0									
Flange DN 100 PN 160 Form L, DIN 2501/316/316L			D	1									
Flange DN 125 PN 16 Form C, DIN 2501/316/316L			D	2									
Flange DN 125 PN 40 Form C, DIN 2501/316/316L			D	3									
Flange DN 150 PN 16 Form C, DIN 2501/316/316L			D	4									
Flange DN 150 PN 16 Form C, DIN 2501/316/316L, with Alloy C22 (2.4602) coating			D	5									
Flange DN 150 PN 40 Form C, DIN 2501/316/316L			D	6									
Flange DN 150 PN 160 Form L, DIN 2501/316/316L			D	7									

Selection and ordering data (continued)

SITRANS LVL200 Vibrating point level switch, high temperature and pressure design Detects level and material in liquids and slurries in extreme environments. Extension options to 3 m (9.84 ft).	Article No. 7ML5748- ● ● ● ● ● - ● ● ● ●	Ord. Code ● ● ●
Flange DN 200 PN 16 Form C, DIN 2501/316/316L	D 8	
Flange DN 200 PN 64 Form C, DIN 2501/316/316L	E 0	
Flange DN 250 PN 16 Form C, DIN 2501/316/316L	E 1	
Flange DN 250 PN 64 Form C, DIN 2501/316/316L	E 2	
Flange DN 50 PN 40 Form B1, EN 1092-1/1.4435	E 3	
Flange DN 50 PN 40 Form B1, EN 1092-1/316/316L	E 4	
Flange DN 50 PN 40 Form B1, EN 1092-1/316/316L, with Alloy C22 (2.4602) coating	E 5	
Flange DN 50 PN 40 Form B2, EN 1092-1/316/316L	E 6	
Flange DN 50 PN 40 Form C, EN 1092-1/316/316L	E 7	
Flange DN 50 PN 40 Form D, EN 1092-1/316/316L	E 8	
Flange DN 50 PN 40 Form E, EN 1092-1/316/316L	F 0	
Flange DN 50 PN 63 Form B2, EN 1092-1/316/316L	F 1	
Flange DN 50 PN 63 Form B2, EN 1092-1/316/316L, with Alloy C22 (2.4602) coating	F 2	
Flange DN 50 PN 63 Form C, EN 1092-1/316/316L	F 3	
Flange DN 50 PN 63 Form D, EN 1092-1/316/316L	F 4	
Flange DN 50 PN 100 Form B1, EN 1092-01/316/316L	F 5	
Flange DN 50 PN 100 Form C, EN 1092-1/316/316L	F 6	
Flange DN 50 PN 160 Form B1, EN 1092-1/316/316L	F 7	
Flange DN 50 PN 160 Form B2, EN 1092-1/316/316L	F 8	
Flange DN 50 PN 250 Form B1, EN 1092-1/316/316L	G 0	
Flange DN 50 PN 250 Form B2, EN 1092-1/316/316L	G 1	
Flange DN 65 PN 40 Form B1, EN 1092-1/316/316L	G 2	
Flange DN 65 PN 63 Form C, EN 1092-1/316/316L	G 3	
Flange DN 80 PN 40 Form B1, EN 1092-1/316/316L	G 4	
Flange DN 80 PN 40 Form B2, EN 1092-1/316/316L	G 5	
Flange DN 80 PN 40 Form C, EN 1092-1/316/316L	G 6	
Flange DN 80 PN 40 Form D, EN 1092-1/316/316L	G 7	
Flange DN 80 PN 63 Form B2, EN 1092-1/316/316L	G 8	
Flange DN 80 PN 160 Form B2, EN 1092-1/316/316L	H 0	
Flange DN 80 PN 250 Form B1, EN 1092-1/316/316L	H 1	
Flange DN 100 PN 16 Form D, EN 1092-1/316/316L	H 2	
Flange DN 100 PN 40 Form B1, EN 1092-1/316/316L	H 3	
Flange DN 100 PN 40 Form B2, EN 1092-1/316/316L	H 4	
Flange DN 100 PN 40 Form C, EN 1092-1/316/316L	H 5	
Flange DN 100 PN 40 Form D, EN 1092-1/316/316L	H 6	
Flange DN 100 PN 160 Form B2, EN 1092-1/316/316L	H 7	
Flange DN 125 PN 63 Form C, EN 1092-1/316/316L	H 8	
Flange DN 125 PN 160 Form B2, EN 1092-1/316/316L	K 0	
Flange DN 150 PN 40 Form B1, EN 1092-1/316/316L	K 1	
Flange DN 150 PN 40 Form C, EN 1092-1/316/316L	K 2	
Flange DN 150 PN 40 Form D, EN 1092-1/316/316L	K 3	
Flange DN 40 PN 100, GOST 12815-80.7/316/316L	K 4	
Flange DN 50 PN 100, GOST 12815-80.7/316/316L	K 5	
Flange DN 80 PN 100, GOST 12815-80.7/316/316L	K 6	
Flange DN 100 PN 100, GOST 12815-80.7/316/316L	K 7	
Flange 1½" 150 lb RJF, ASME B16.5/316/316L	K 8	
Flange 1½" 300 lb RJF, ASME B16.5/316/316L	L 1	
Flange 1½" 1 500 lb RJF, ASME B16.5/316/316L	L 2	
Flange 2" 150 lb RF, ASME B16.5/316/316L	L 3	
Flange 2" 150 lb RF, ASME B16.5/Alloy C22 (2.4602) solid	L 4	
Flange 2" 300 lb RF, ASME B16.5/316/316L	L 5	
Flange 2" 300 lb RF, ASME B16.5/Alloy C22 (2.4602) solid	L 6	
Flange 2" 300 lb RF, ASME B16.5/316/316L, with Alloy C22 (2.4602) coating	L 7	
Flange 2" 300 lb ST (small tongue), ASME B16.5/316/316L	L 8	
Flange 2" 300 lb RJF, ASME B16.5/316/316L	M 1	
Flange 2" 300 lb LM (large male), ASME B16.5/316/316L	M 2	
Flange 2" 300 lb SG, ASME B16.5/316/316L	M 3	

Selection and ordering data (continued)

SITRANS LVL200 Vibrating point level switch, high temperature and pressure design Detects level and material in liquids and slurries in extreme environments. Extension options to 3 m (9.84 ft).	Article No. 7ML5748- ● ● ● ● ● - ● ● ● ●	Ord. Code ● ● ●
Flange 2" 300 lb LG, ASME B16.5/316/316L	M 4	
Flange 2" 600 lb RF, ASME B16.5/316/316L	M 5	
Flange 2" 600 lb RF, ASME B16.5/316/316L, with Alloy C22 (2.4602) coating	M 6	
Flange 2" 600 lb RJF, ASME B16.5/316/316L	M 7	
Flange 2" 900 lb RF, ASME B16.5/316/316L	M 8	
Flange 2" 900 lb RJF, ASME B16.5/316/316L	N 1	
Flange 2" 1 500 lb RF, ASME B16.5/316/16L	N 2	
Flange 2" 1 500 lb RJF, ASME B16.5/316/316L	N 3	
Flange 2" 1 500 lb LT, ASME B16.5/Alloy C22 (2.4602) solid	N 4	
Flange 2" 1 500 lb LM, ASME B16.5/316/316L	N 5	
Flange 2" 2 500 lb RJF, ASME B16.5/316/316L	N 6	
Flange 2½" 150 lb RF, ASME B16.5/316/316L	N 7	
Flange 2½" 300 lb RF, ASME B16.5/316/316L	N 8	
Flange 2½" 600 lb RF, ASME B16.5/316/316L	P 1	
Flange 2½" 900 lb RF, ASME B16.5/316/316L	P 2	
Flange 2½" 2 500 lb RJF, ASME B16.5/316/316L	P 3	
Flange 3" 150 lb RF, ASME B16.5/316/316L	P 4	
Flange 3" 150 lb RF, ASME B16.5/Alloy C22 (2.4602) solid	P 5	
Flange 3" 300 lb RF, ASME B16.5/316/316L	P 6	
Flange 3" 300 lb RJF, ASME B16.5/316/316L	P 7	
Flange 3" 300 lb LT, ASME B16.5/316/316L	P 8	
Flange 3" 600 lb RF, ASME B16.5/316/316L	R 1	
Flange 3" 600 lb RF, ASME B16.5/Alloy C22 (2.4602) solid	R 2	
Flange 3" 600 lb RF, ASME B16.5/316/316L, with Alloy C22 (2.4602) coating	R 3	
Flange 3" 600 lb RJF, ASME B16.5/316/316L	R 4	
Flange 3" 900 lb RF, ASME B16.5/316/316L	R 5	
Flange 3" 900 lb RJF, ASME B16.5/316/316L	R 6	
Flange 3" 1 500 lb RF, ASME B16.5/316/316L	R 7	
Flange 3" 1 500 lb RJF, ASME B16.5/316/316L	R 8	
Flange 3" 2 500 lb RF, ASME B16.5/316/316L	S 1	
Flange 3" 2 500 lb RJF, ASME B16.5/316/316L	S 2	
Flange 4" 150 lb RF, ASME B16.5/316/316L	S 3	
Flange 4" 150 lb RF, ASME B16.5/Alloy C22 (2.4602) solid	S 4	
Flange 4" 150 lb RJF, ASME B16.5/316/316L	S 5	
Flange 4" 300 lb RF, ASME B16.5/316/316L	S 6	
Flange 4" 300 lb RF, ASME B16.5/Alloy C22 (2.4602) solid	S 7	
Flange 4" 300 lb LT, ASME B16.5/316/316L	S 8	
Flange 4" 600 lb RF, ASME B16.5/316/316L	T 1	
Flange 4" 600 lb RF, ASME B16.5/Alloy C22 (2.4602) solid	T 2	
Flange 4" 600 lb RJF, ASME B16.5/316/316L	T 3	
Flange 4" 900 lb RF, ASME B16.5/316/316L	T 4	
Flange 4" 900 lb RJF, ASME B16.5/316/316L	T 5	
Flange 4" 900 lb LT, ASME B16.5/316/316L	T 6	
Flange 4" 1 500 lb RF, ASME B16.5/316/316L	T 7	
Flange 4" 1 500 lb RJF, ASME B16.5/316/316L	T 8	
Flange 4" 1 500 lb LT, ASME B16.5/316/316L	U 1	
Flange 5" 150 lb RF, ASME B16.5/316/316L	U 2	
Flange 5" 300 lb RF, ASME B16.5/316/316L	U 3	
Flange 5" 600 lb RJF, ASME B16.5/316/316L	U 4	
Flange 6" 150 lb RF, ASME B16.5/316/316L	U 5	
Flange 6" 300 lb RF, ASME B16.5/316/316L	U 6	
Flange 6" 300 lb LT, ASME B16.5/316/316L	U 7	
Flange DN 50 30K RF, JIS/316/316L	U 8	
Flange DN 50 40K RF, JIS/316/316L	V 1	
Flange DN 65 40 K RF, JIS/316/316L	V 2	
Mobrey flange PN 16 Form A/316/316L	V 3	
Mobrey flange PN 16 Form E/316/316L	V 4	

Selection and ordering data (continued)

SITRANS LVL200 Vibrating point level switch, high temperature and pressure design Detects level and material in liquids and slurries in extreme environments. Extension options to 3 m (9.84 ft).	Article No. 7ML5748- ● ● ● ● ● - ● ● ● ●	Ord. Code ● ● ●
Thread R1 PN 160, EN 10226-1/Inconel 718 (2.4668)[14]	W 1	
Thread R1 PN 100, EN 10226-1/316L[15]	W 2	
Gas-tight seal/Process temperature		
With gas-tight seal/-196 ... +450 °C (-321 ... +842 °F)	1	
Without/-196 ... +450 °C (-321 ... +842 °F)	2	
Electronics		
Relay (2 x SPDT) 20 .. 72 V DC/20 ... 253 V AC (5A)	1	
Transistor (NPN/PNP) 9.6 ... 55 V DC	2	
Two-wire (8/16 mA) 9.6 ... 35 V DC	3	
Relay (2 x SPDT) 20 ... 72 V DC/20 ... 253 V AC (5A), with SIL qualification	4	
Transistor (NPN/PNP) 9.6 ... 55 V DC, with SIL qualification	5	
Two-wire (8/16 mA) 9.6 ... 35 V DC, with SIL qualification	6	
Housing/Cable entry		
Plastic single chamber/IP66/IP67/M20 x 1.5 gland PA black (ø5 ... 9 mm)	A	
Plastic single chamber/IP66/IP67/½" NPT gland PA black (ø5 ... 9 mm)	B	
Aluminum IP66/IP67/M20 x 1.5 gland PA black (ø5 ... 9 mm)	C	
Aluminum IP66/IP67/½" NPT gland PA black (ø5 ... 9 mm)	D	
Stainless steel single chamber (precision casting)/ IP66/IP67/M20 x 1.5	E	
Stainless steel single chamber (precision casting)/ IP66/IP67/½" NPT gland PA black (ø5 ... 9 mm)	F	
Stainless steel single chamber (electropolished)/ IP66/IP67/M20 x 1.5 gland PA black (ø5 ... 9 mm)	G	
Stainless steel single chamber (electropolished)/ IP66/IP67/½" NPT gland PA black (ø5 ... 9 mm)	H	
Aluminium IP66/IP67/M20 x 1.5 blind plug	J	
Aluminium IP66/IP67/½" NPT blind plug	K	
Stainless steel single chamber (precision casting)/IP66/IP67/M20 x 1.5 blind plug	L	
Stainless steel single chamber (precision casting)/ IP66/IP67/½" NPT blind plug	M	
Stainless steel single chamber (electropolished)/ IP66/IP67/M20 x 1.5 blind plug	N	
Stainless steel single chamber (electropolished)/ IP66/IP67/½" NPT blind plug	P	
Rigid Extension Compact		
Compact version, 77 mm	C 1	
Rigid Extension 316L		
200 ... 500 mm	A 0	
501 ... 1 000 mm	A 1	
1 001 ... 1 500 mm	A 2	
1 501 ... 2 000 mm	A 3	
2 001 ... 2 500 mm	A 4	
2 501 ... 3 000 mm	A 5	
Rigid Extension Alloy C22		
200 ... 500 mm	B 0	
501 ... 1 000 mm	B 1	
1 001 ... 1 500 mm	B 2	
1 501 ... 2 000 mm	B 3	
2 001 ... 2 500 mm	B 4	
2 501 ... 3 000 mm	B 5	

Selection and Ordering data	Order code
Further designs	
Please add "**-Z**" to Article No. and specify Order code(s).	
Cleaning including Certificate(oil, grease, and silicone free).	**W01**
Enter the total insertion length in plain text description.	**Y01**
Identification label (measurement loop) stainless steel.	**Y17**
Identification Label (measurement loop) foil.	**Y18**

Selection and Ordering data	Order code
Output switching delay (1 ... 60 s)/default is 1 s	**Y36**
NACE0175 to 3.1 Material Certificate for material (EN 10204 NACE MR 0175) Note: not available with some Process connection options.	**D07**
Material Inspection 3.1-Inspection certificate for material (EN 10204)	**C05**

Selection and ordering data (continued)

Selection and Ordering data	Order code
Acceptance test Certificate 2.2 for material (EN 10204)	**C15**
Dye penetration test, results confirmed via a 3.1 certificate/instrument (EN 10204)	**C13**
3.1-Inspection certificate for instrument with test data (EN 10204)	**C25**
Quality and test plan	**C26**
Inspection certificate 3.1 (EN 10204) - device and pressure test	**C31**
Helium leak test + 3.1 certificate/instrument	**C32**

Spare Parts and Accessories	Article No.
SITRANS SCSC single channel signal conditioner and remote test	**7ML5760**
SITRANS TCSC two channel signal conditioner and remote test	**7ML5761**
Operating Instructions	
All literature is available to download for free, in a range of languages, at http://www.siemens.com/processinstrumentation/documentation	

1) Not available with Process Connection options A0 and A2.
2) Available only with Rigid extension option C1.
3) Available only with 316L Process Connection and Rigid extension options.
4) Available only with Alloy C22 Rigid extension options.
5) Available only with Electronic options 3 and 6.
6) Available only with Housing/Cable entry options J, K, L, M.
7) Available only with Electronic option 6.
8) Available only with Electronic options 1, 2, and 4.
9) Available only with Gas tight seal/Process temperature option 1.
10) Not available with Housing/Cable entry options G, H, N, P.
11) Available only with Housing/Cable entry options J, K, L, M, N, P.
12) Not available with Housing/Cable entry options A and B.
13) Not available with Housing/Cable entry options A, B, G, H, N, P.
14) Available only with Version/material option 1.
15) Available only with Version/material option 2.

SITRANS SCSC, single channel, signal conditioner Provides power and relay output for one LVL200 vibrating switch, 8/16 mA electronics design. Provides remote test of any LVL200 device.	**Article No. 7ML5760-** ●	●	A	●	1	-	●	●	●	●
Click on the Article No. for the online configuration in the PIA Life Cycle Portal.										
Approvals										
For Ex-free area	1	A								
ATEX II (1) G/D [Ex ia Ga/Da] IIC/IIIC, I (M1) [Ex ia Ma] I	1	D								
ATEX II (1) G/D (Ex ia Ga/Da) IIC/IIIC, I (M1) (Ex ia Ma) I + WHG	1	E								
IEC [Ex ia Ga] IIC, [Ex ia Da] IIIC, [Ex ia Ma] I	1	H								
IEC (Ex ia Ga) IIC, (Ex ia Da) IIIC, (Ex ia Ma) I + WHG	1	J								
Ex-free area (incl. EAC approval)	2	A								
SIL qualification										
Without				1						
With				2						
Version										
Single-channel (8/16 mA) for level detection							1			
Single channel (8/16 mA), level detection with fail safe relay							2			
Housing/cable entry										
Plastic/IP20								A		
Terminal block connection										
Detachable 2.5 mm²/ Ex sensor: 2 x blue; output and operating voltage: 2 x black									A	
Detachable 2.5 mm²/ sensor: 2 x black; output and operating voltage: 2 x black									B	
Language										
English										0
German										1

Selection and Ordering data
Operating Instructions
All literature is available to download for free, in a range of languages, at http://www.siemens.com/processinstrumentation/documentation

Selection and ordering data (continued)

SITRANS TCSC, dual channel, signal conditioner Provides power and relay output for two LVL200 vibrating switches, 8/16 mA electronics design. Provides remote test of any LVL200 device.	Article No. 7ML5761-	●	●	A	●	1	-	●	●	●	●
Click on the Article No. for the online configuration in the PIA Life Cycle Portal.											
Approvals											
For Ex-free area[1]		1	A								
ATEX II (1) G/D [Ex ia Ga/Da] IIC/IIIC, I (M1) [Ex ia Ma] I[2]		1	D								
ATEX II (1) G/D (Ex ia Ga/Da) IIC/IIIC, I (M1) (Ex ia Ma) I + WHG		1	E								
IEC [Ex ia Ga] IIC, [Ex ia Da] IIIC, [Ex ia Ma] I[2]		1	H								
IEC (Ex ia Ga) IIC, (Ex ia Da) IIIC, (Ex ia Ma) I + WHG		1	J								
Ex-free area (incl. EAC approval)		2	A								
SIL qualification											
Without					1						
With					2						
Version											
Double-channel (8/16 mA) for level detection								1			
Housing/cable entry											
Plastic/IP20									A		
Terminal block connection											
Detachable 2.5 mm²/ Ex sensor: 2 x blue; output and operating voltage: 2 x black										A	
Detachable 2.5 mm²/ sensor: 2 x black; output and operating voltage: 2 x black										B	
Language											
English											0
German											1

Selection and Ordering data	Order code
Operating Instructions All literature is available to download for free, in a range of languages, at http://www.siemens.com/processinstrumentation/documentation	

1) Available only with terminal block connection option B.
2) Available only with terminal block connection option A.

Technical specifications

SITRANS LVL200	
Mode of operation	
Measuring principle	Vibrating point level switch
Input	
Measured variable	High and low and demand (via mode switch)
Output	
Output options	• Relay output (DPDT), 2 floating SPDTs • Contactless electronic switch • 2-wire Namur signal output • Transistor (NPN/PNP) 10 ... 55 V DC • 8/16 mA
Measuring accuracy	
Repeatability	0.1 mm (0.004 inch)
Hysteresis	Approx. 2 mm (0.08 inch) with vertical installation
Switching delay	• Standard, Extended: approx. 500 ms (on/off) • High temperature: approx. 1 s (optionally adjustable at factory)
Frequency	• Standard, Extended: Approx. 1 200 Hz • High temperature: 1400 Hz
Rated operating conditions	
Installation conditions	
• Location	Indoor/outdoor
Ambient conditions	
• Ambient temperature	-40 ... +70 °C (-40 ... +158 °F)
• Storage temperature	-40 ... +80 °C (-40 ... +176 °F)
• Installation category	III
• Pollution degree	2
Medium conditions	
• Temperature	
- LVL200S Standard	-50 ... +150 °C (-58 ... +302 °F)
- LVL200S High temperature option	-50 ... +250 °C (-58 ... +482 °F)
- LVL200E Standard: with 316L/ Alloy C22	-50 ... +150 °C (-58 ... +302 °F)
- LVL200E High temperature option with 316L/Alloy C22	-50 ... +250 °C (-58 ... +482 °F)
- LVL200H High temperature	-196 ... +450 °C (-321 ... +842 °F)
Pressure (vessel)	• Standard, Extended: -1 ... 64 bar g (-14.5 ... 928 psi g) • High temperature: instrument version up to 160 bar (2 320 psi g): -1 ... 160 bar/-100 ... 16 000 kPa (-14.5 ... 2 320 psi g) Note: The process pressure is dependent on configuration, including process fitting, e.g. flange
Density	0.7 ... 2.5 g/cm³ (0.025 ... 0.09 lb/in³); 0.5 ... 2.5 g/cm³ (0.018 ... 0.09 lb/in³) by switching over Density optionally starts at 0.47 cm³ (0.017 lb/in³)
Design	
Material	
• Enclosure	• Aluminum die-cast AlSi10Mg, powder-coated, basis: Polyester • Stainless steel housing, electropolished 316L • Stainless steel housing, precision casting 316L • Plastic housing, plastic PBT (Polyester)

Technical specifications (continued)

SITRANS LVL200	
• Tuning fork	316L (1.4404 or 1.4435), Alloy C22
• Extension tube [ø 21.3 mm (0.839 inch)]	316L (1.4404 or 1.4435), Alloy C22
• Process connection: threaded	• Standard, Extended: 316L (1.4404 or 1.4435), Alloy C22 • High temperature: Inconel 718
• Process connection: flange	316L (1.4404 or 1.4435), 316L with Alloy C22, ECTFE, or PFA coating
• Process seal	Klingersil C-4400
Process connection	
• Pipe thread, cylindrical (ISO 228 T1)	G ¾" A, G 1" A
• Pipe thread, tapered	¾" NPT, 1" NPT, 1½" NPT
• Flanges	DIN from DN 25, ASME from 1"
• Hygienic fittings	Bolting DN 40 PN 40, 1, 1½, 2, 2½" Tri-Clamp PN 10, conus DN 25 PN 40, Tuchenhagen Varivent DN 50 PN 10, SMS
Degree of protection	Type 4X/NEMA 4X/IP66/IP67
Conduit entry	• 1 x M20 x 1.5 (cable: ø 5 ... 9 mm), 1 x blind stopper M20 x 1.5; attached 1 x M20 x 1.5 cable entry • 1 x ½" NPT cable entry, 1 x blind stopper ½" NPT, 1 x ½" NPT cable entry • 1x M12 x 1; 1 x blind stopper M20 x 1.5
Weight	
• Device weight (dependent on process fitting)	Approx. 0.8 ... 4 kg (0.18 ... 8.82 lb)
• Tube extension (extended version)	Approx. 920 g/m (10 oz/ft)
Power supply	
Supply voltage	
• Relay DPDT	20 ... 253 V AC, 50/60 Hz, 20 ... 72 V DC
• Contactless	20 ... 253 V AC, 50/60 Hz, 20 ... 253 V DC
• 2-wire NAMUR	
Operating voltage (characteristics according to standard) for connection to an amplifier according to NAMUR	IEC 60947-5-6, approx. 8.2 V Off-load voltage U_o approx. 8.2 V Short-circuit current I_U approx. 8.2 mA
Operating voltage 8/16 mA (via the signal conditioning instrument)	
• Non-Ex instrument	12 ... 36 V DC
• Ex-d instrument (ATEX, FM, CSA)	12 ... 36 V DC
• Ex-ia instrument (ATEX)	12 ... 29 V DC
• Ex-ia instrument (FM, CSA)	12 ... 31 V DC
Power consumption	• Standard, Extended: 1 ... 8 VA (AC), approx. 1.3 W (DC) • High temperature: 3 VA (AC), 1 W (DC)
• Relay DPDT	1 ... 8 VA (AC), approx. 1.3 W (DC)
• Contactless	Domestic current requirement approx. 3 mA (via load circuit) Load current • Min. 10 mA • Max. 400 mA [with I > 300 mA the ambient temperature can be max. 60 °C (140 °F)] • Max. 4 A up to 40 ms (not WHG specified)

Technical specifications (continued)

SITRANS LVL200	
• 8/16 mA, two-wire output	Output signal • Empty (uncovered) - 8 mA • Full (covered) - 16 mA • Fault message - < 1.8 mA Possible signal conditioning instruments: SITRANS SCSC, SITRANS TCSC
• 2-wire Namur	Current consumption • Falling characteristics ≥ 2.6 mA uncovered/≤ 0.6 mA covered • ≤ 0.6 mA uncovered/≥ 2.6 mA covered • Failure message ≤ 0.6 mA
• Transistor (NPN/PNP) 10 ... 55 V DC	Output • Floating transistor output, permanently shortcircuit-proof Load current • < 400 mA Voltage loss • < 1 V Switching voltage • < 55 V DC Blocking current • < 10 µA
Certificates and approvals	• CE, CSA • Overfill Protection WHG and VLAREM II • FM (Non-Incendive) Class I, Div. 2, Groups A, B, C, D • FM (Explosion-Proof) Class I, Div. 1, Groups A, B, C, D; (Dust Ignition-Proof) Class II, III, Div. 1, Groups E, F, G1 • IECEx d IIC T6 ... T2 Ga/Gb EHEDG • ATEX II 1/2G, 2G EEx d IIC T6 • ATEX II 1G, 1/2G, 2G EEx ia IIC T6 • Shipping approvals • BR-Ex d IIC T6 ... T2 • FDA, 3A, EHEDG • SIL/IEC61508 Declaration of Conformity [SIL-2 (min/max detection)] Please see configuration section below for full list of approvals.

Options

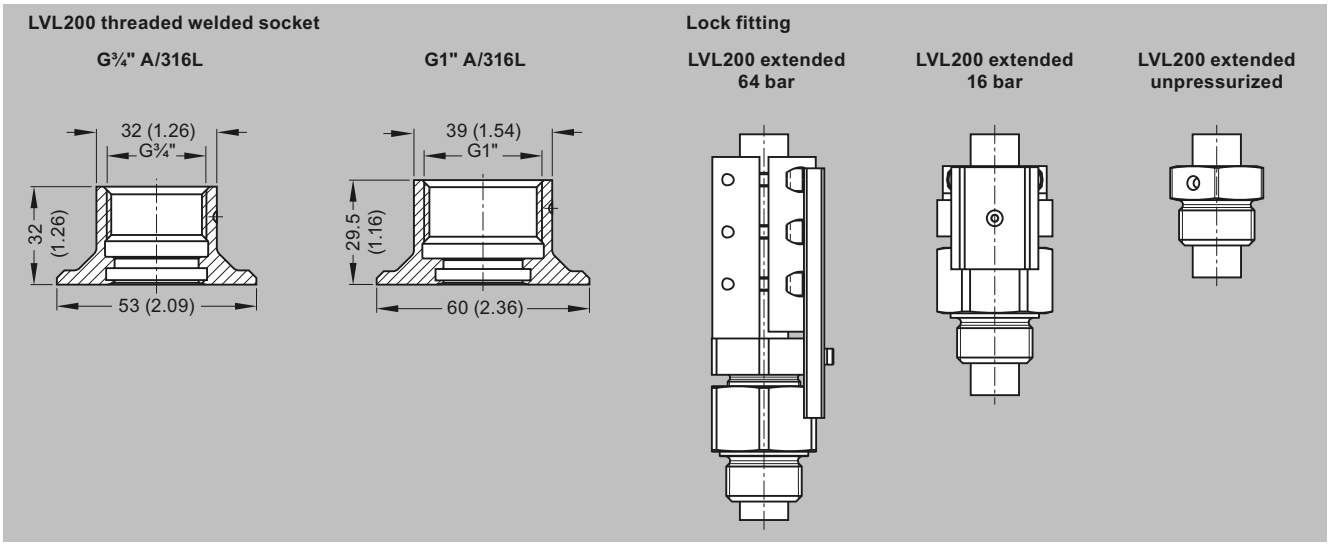

SITRANS LVL200 welded socket and lock fitting, dimensions in mm (inch)

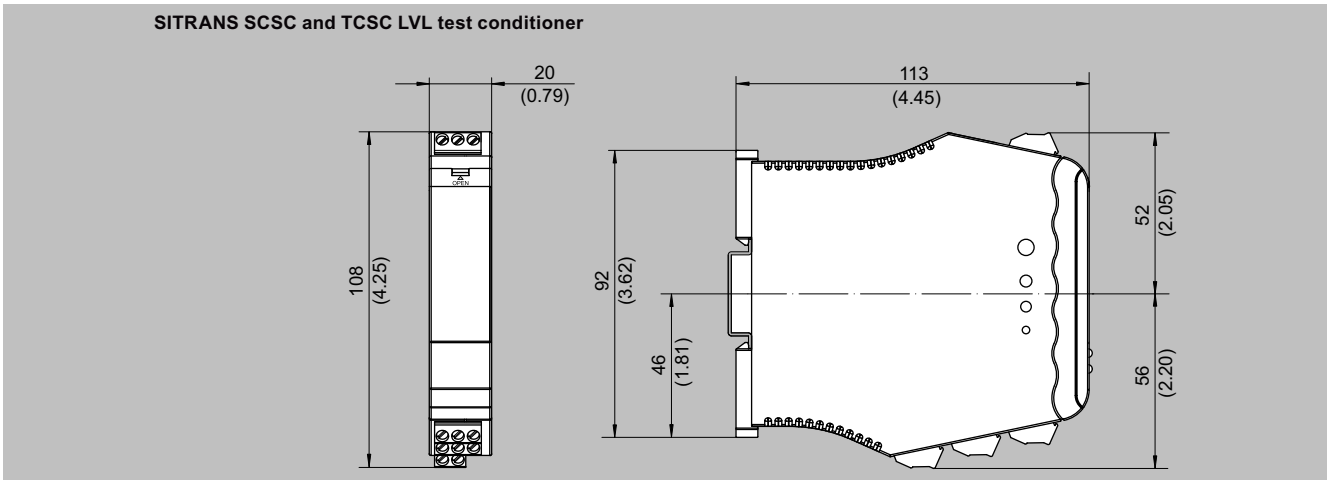

SITRANS SCSC and SITRANS TCSC LVL Test Conditioners, dimensions in mm (inch)

Options (continued)

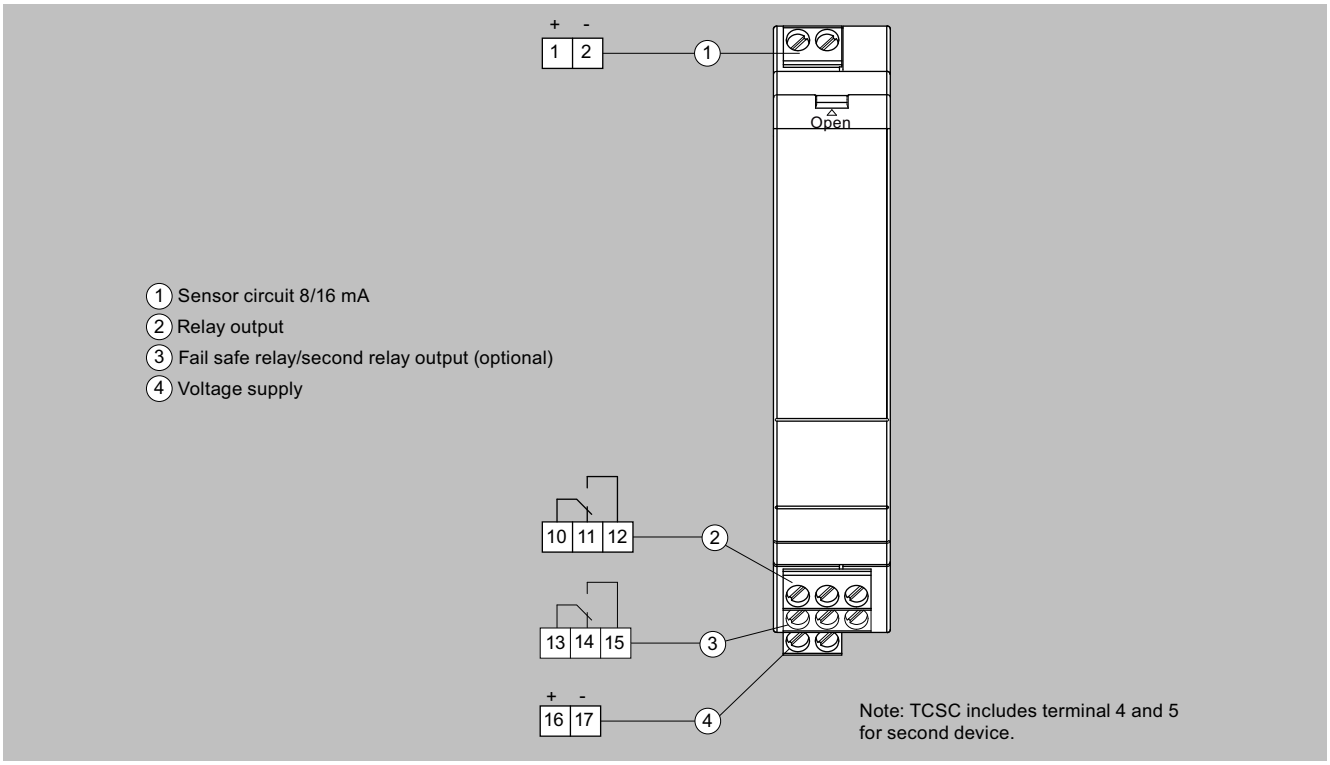

SITRANS SCSC and SITRANS TCSC LVL Test Conditioner connections

Characteristic curves

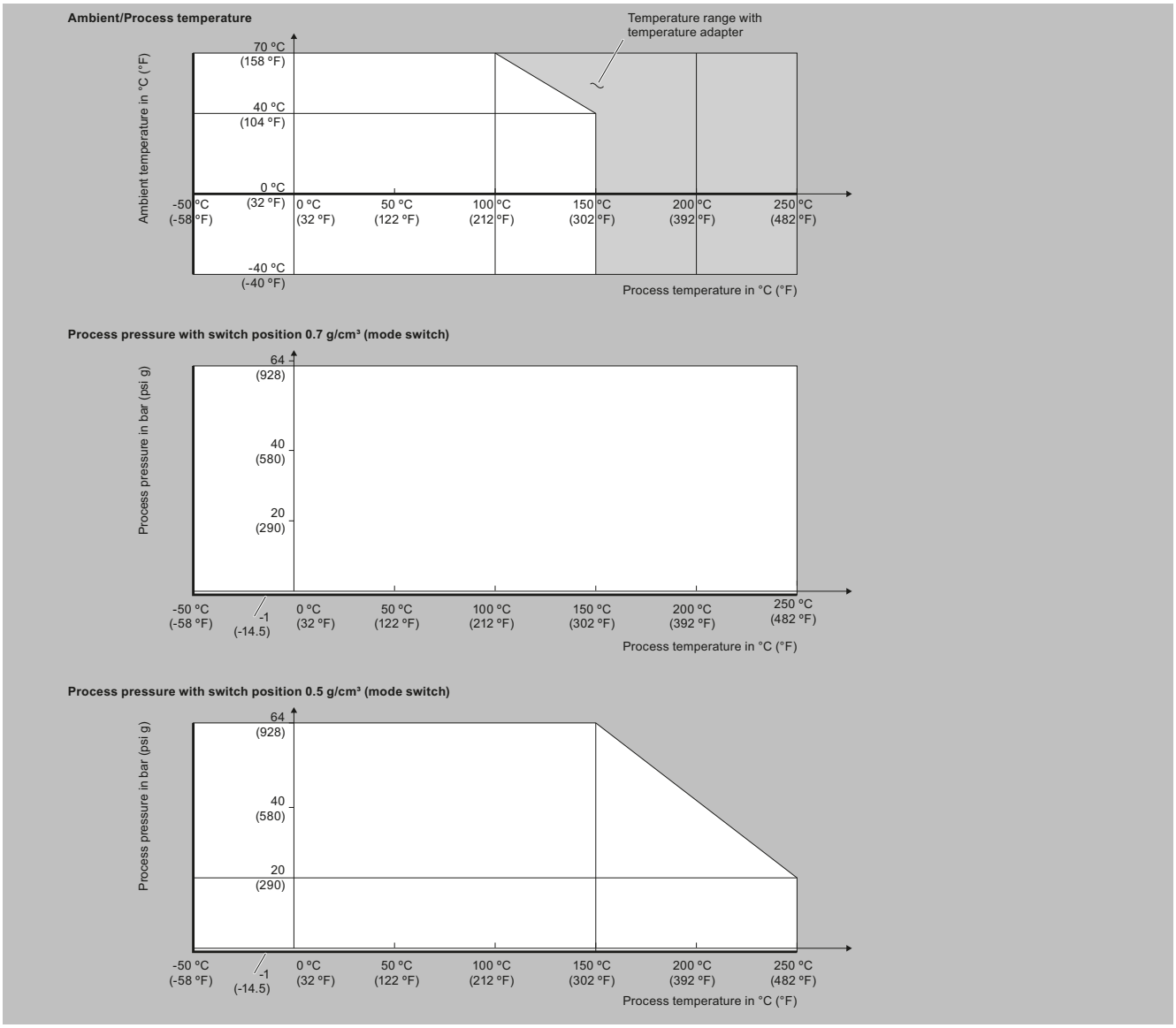

SITRANS LVL200 process pressure/process temperature/ambient temperature derating curves

Characteristic curves (continued)

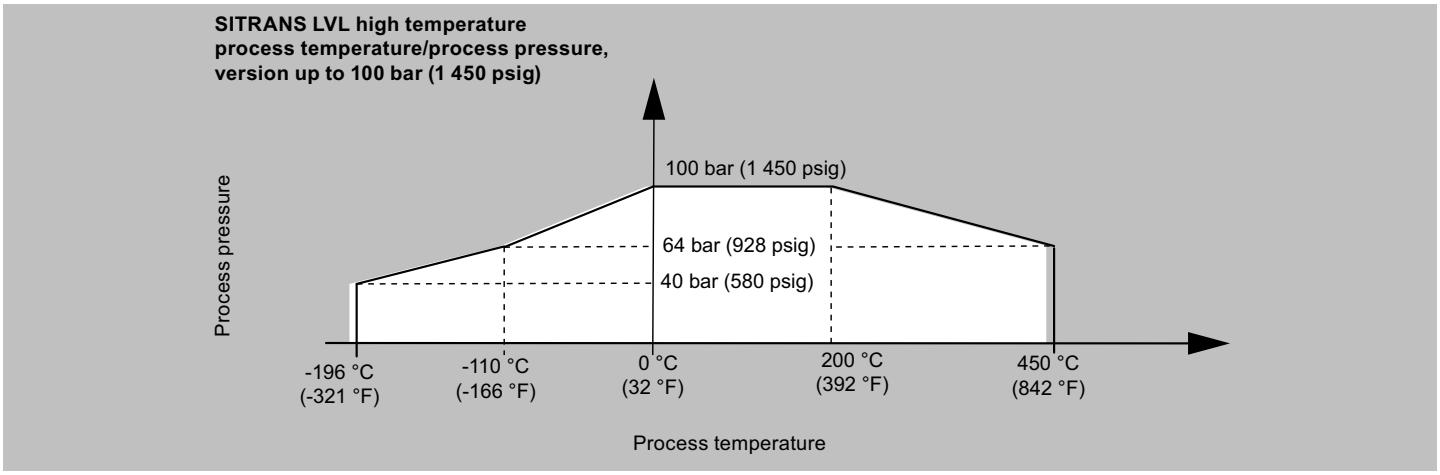

SITRANS LVL200 high temperature process temperature/process pressure curve, version up to 100 bar (1 450 psig)

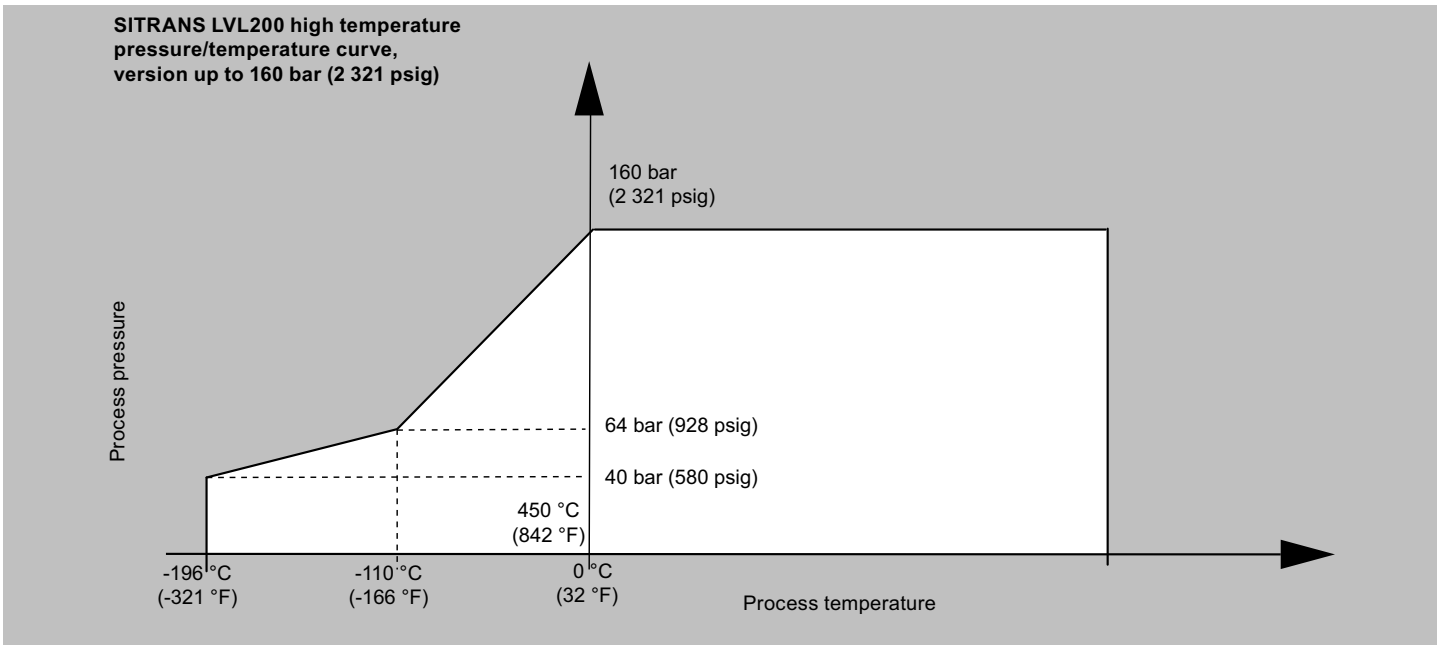

SITRANS LVL200 high temperature pressure/temperature curve, version up to 160 bar (2 321 psig)

Characteristic curves (continued)

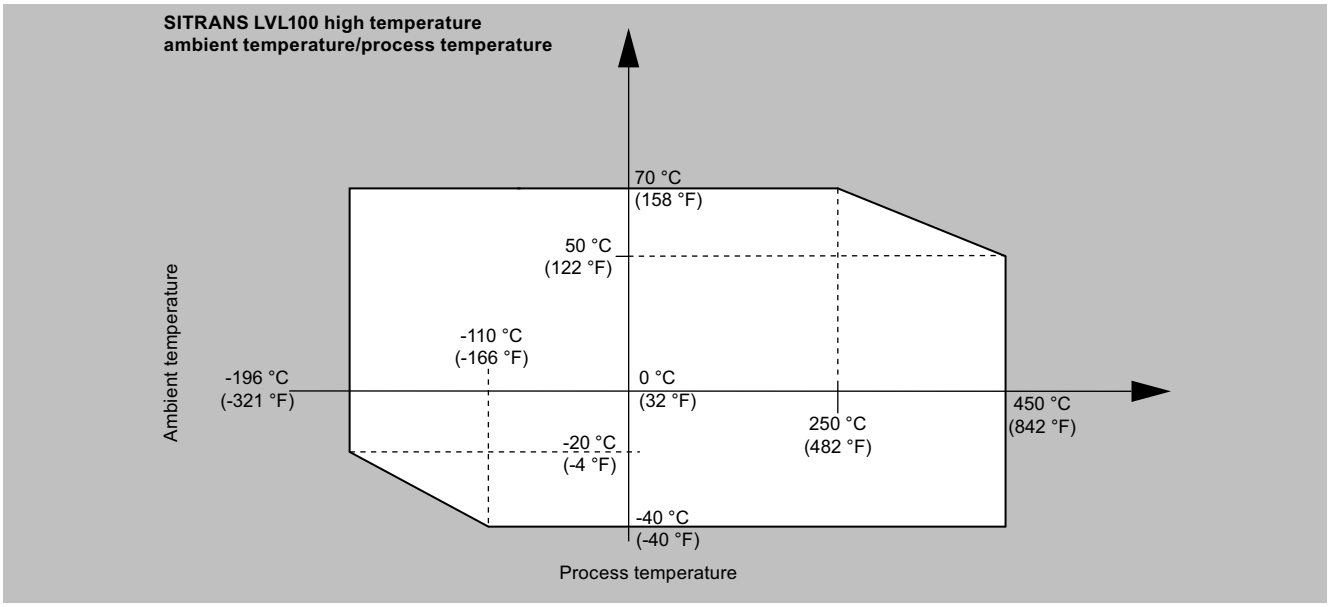

SITRANS LVL200 high temperature ambient temperature/process temperature

Dimensional drawings

SITRANS LVL200, housing

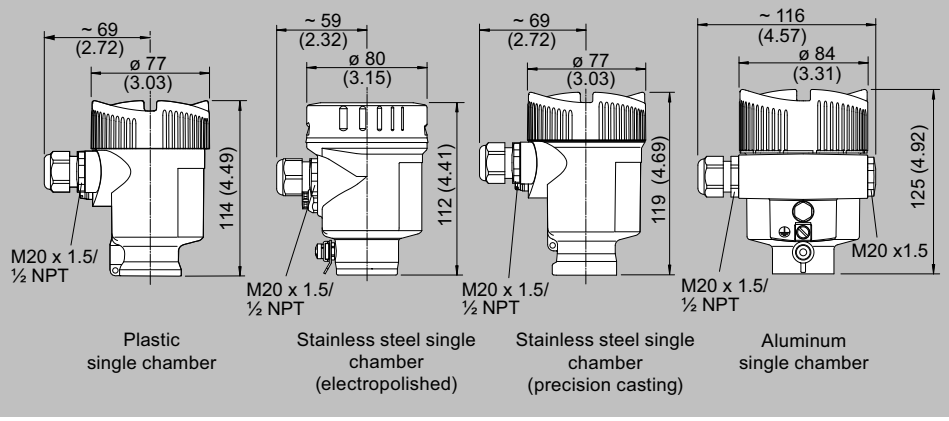

SITRANS LVL200 housing, dimensions in mm (inch)

Dimensional drawings (continued)

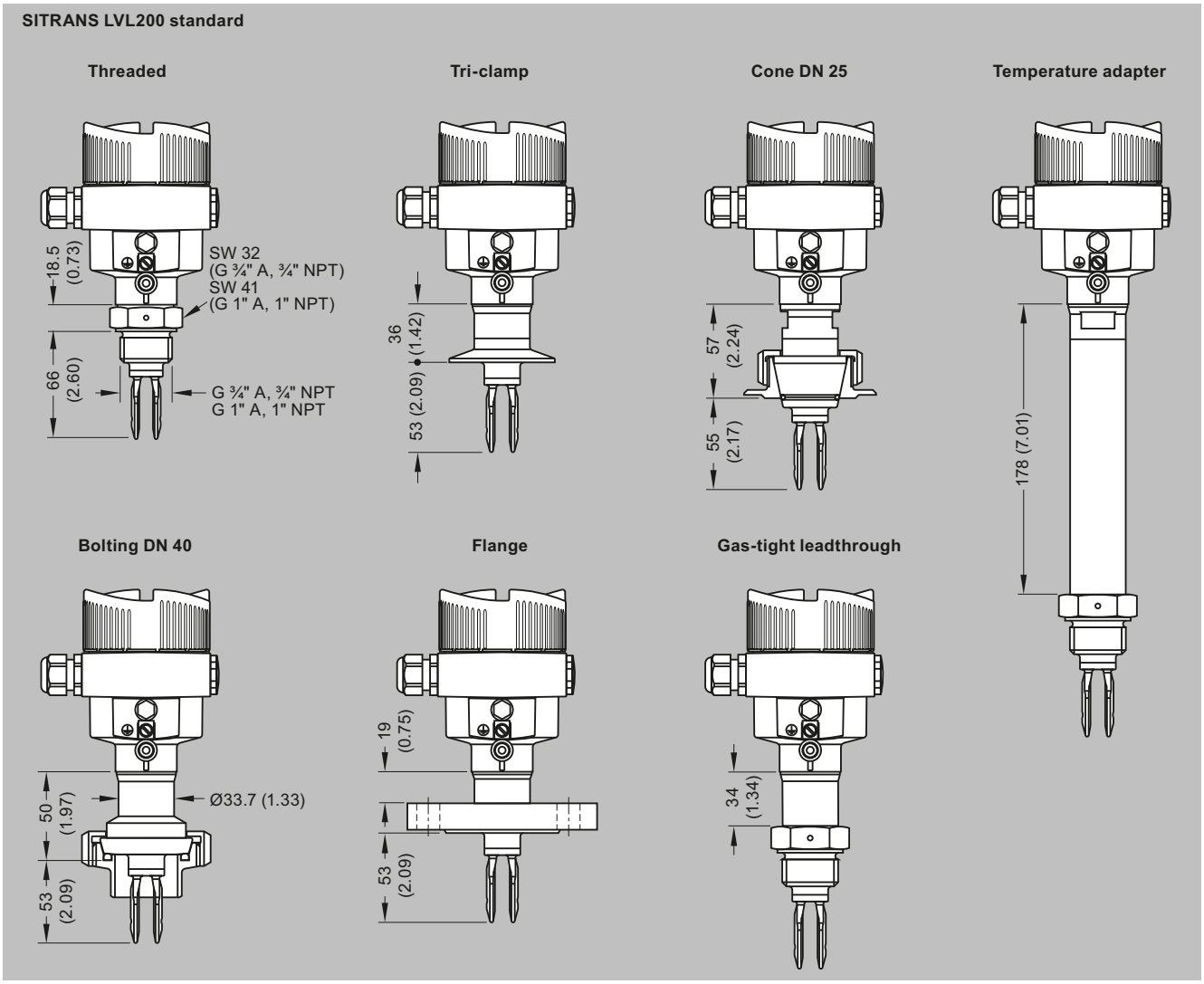

SITRANS LVL200 (standard), dimensions in mm (inch)

Dimensional drawings (continued)

SITRANS LVL200 extended

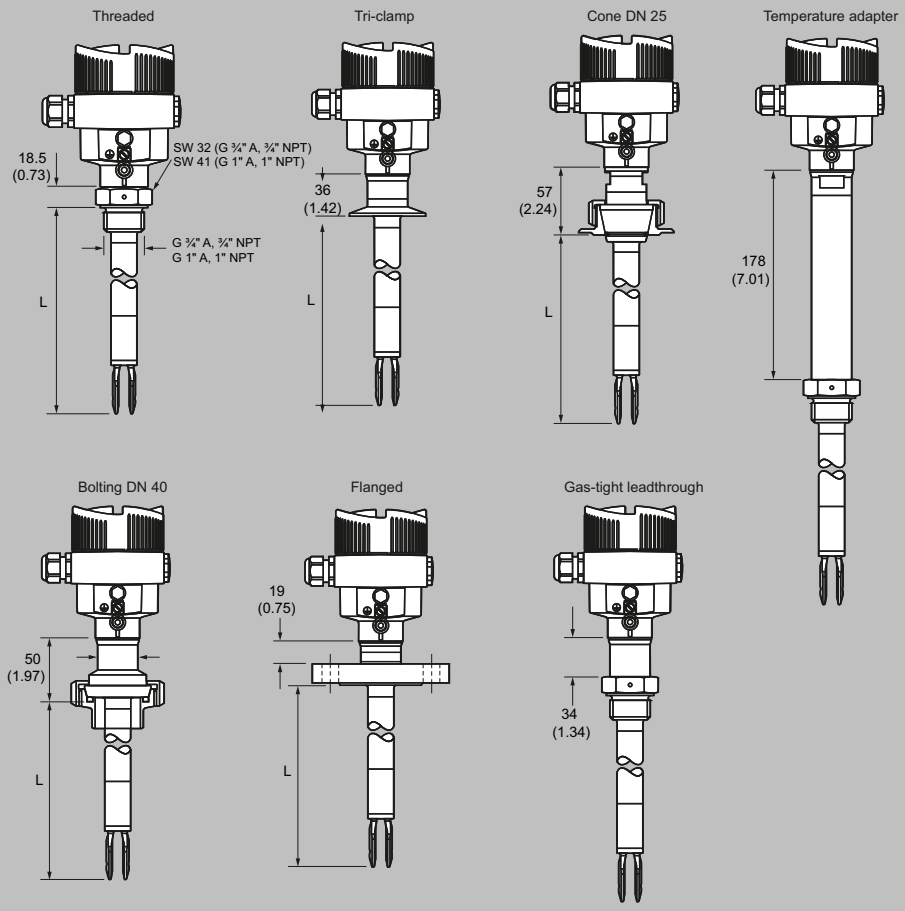

Sensor length (L)

316L, Alloy C22 (2.4602)	80 ... 6 000 mm (3.15 ... 236.2 inch)
Enamelled	80 ... 1 500 mm (3.15 ... 59.06 inch)
316L, ECTFE coated	80 ... 3 000 mm (3.15 ... 118.1 inch)
316L, PFA coated	80 ... 4 000 mm (3.15 ... 157.5 inch)

SITRANS LVL200 (extended), dimensions in mm (inch)

Dimensional drawings

SITRANS LVL200, housing

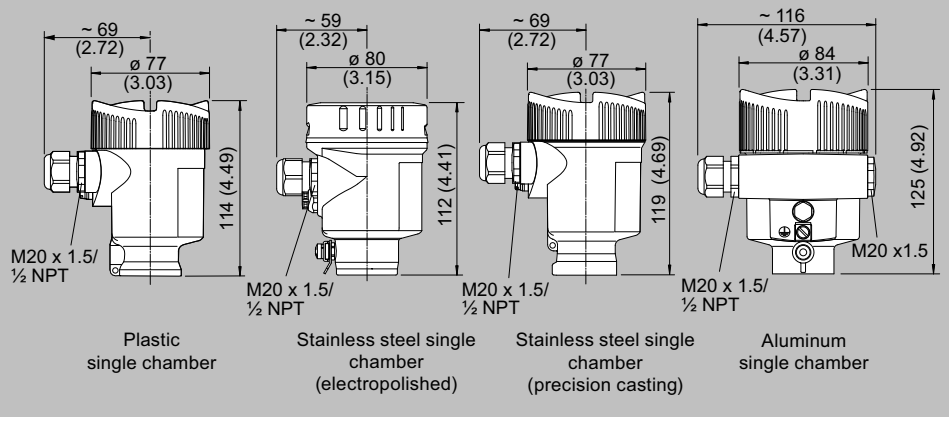

SITRANS LVL200 housing, dimensions in mm (inch)

Dimensional drawings (continued)

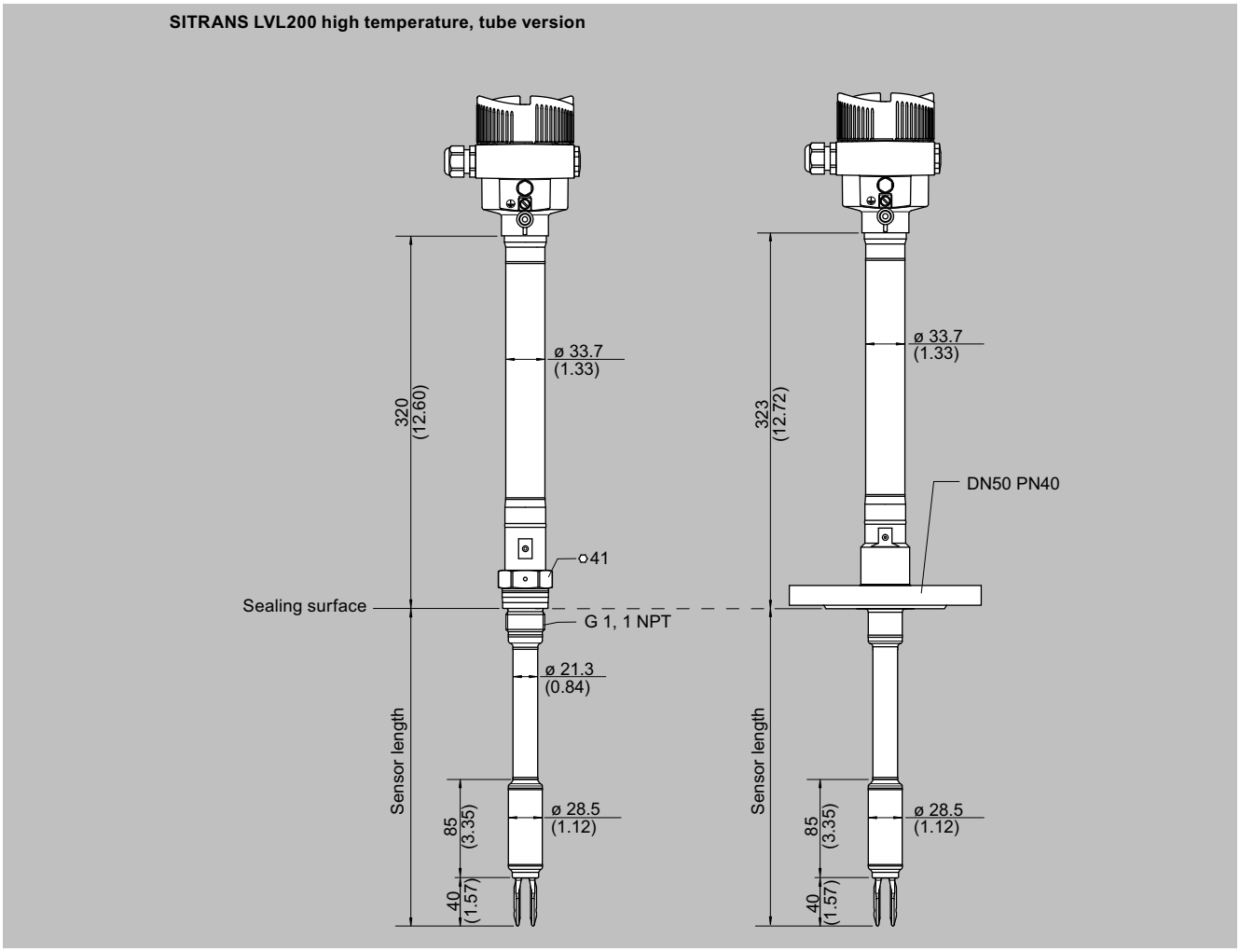

SITRANS LVL200 high temperature, tube version, dimensions in mm (inch)

Circuit diagrams

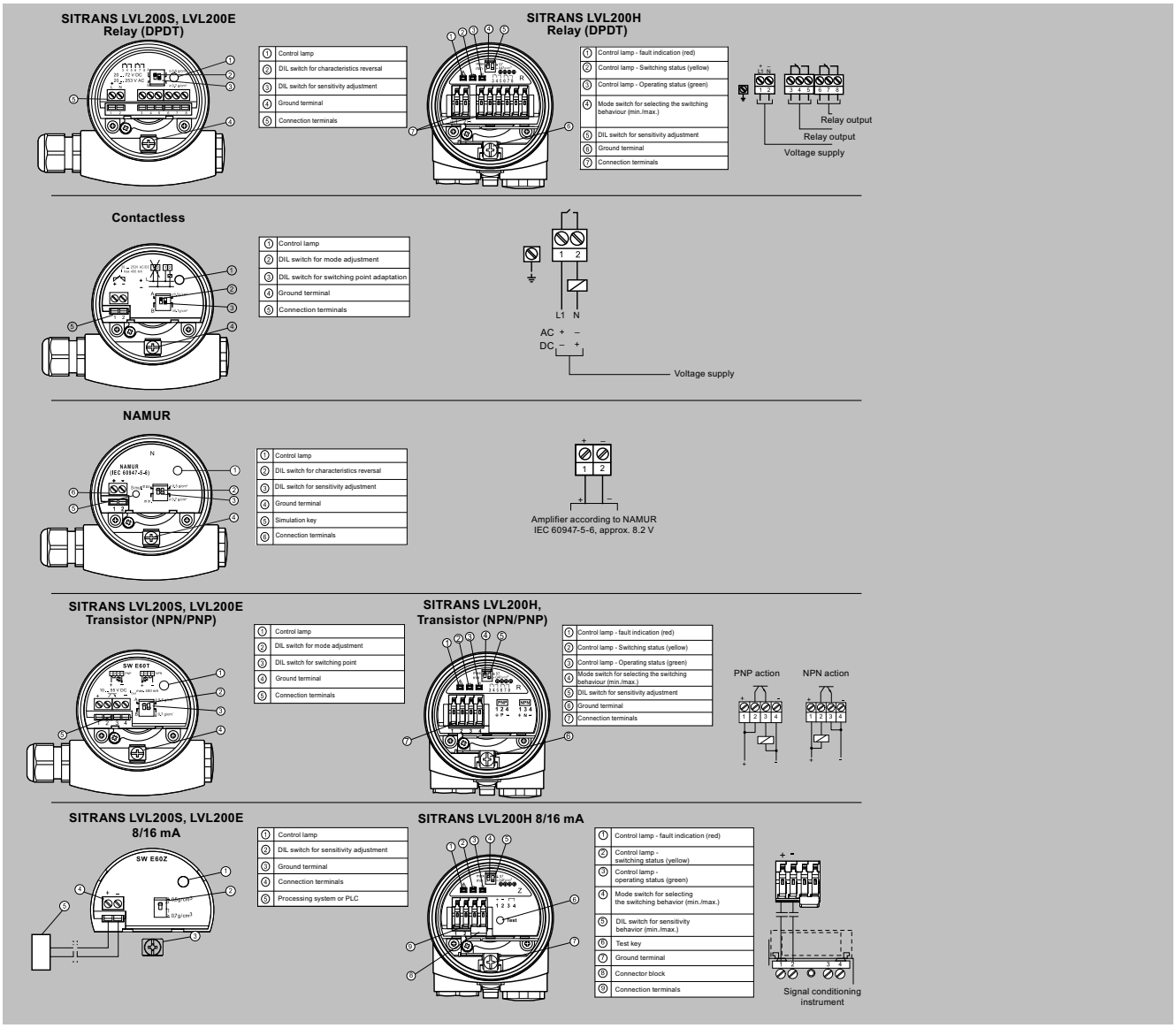

SITRANS LVL200 connections