SITRANS LT500 - HydroRanger / MultiRanger

Overview



SITRANS LT500 is a versatile, single and multi-vessel level monitor/controller for virtually any application in a wide range of industries.

Benefits

- Easy to use, configurable HMI display with local four-button programming, menu-driven parameters, and Wizard support for key applications.
- English, German, French, Spanish, Chinese, Italian, Portuguese, Japanese, Danish, Dutch, Swedish, Finnish, Polish, Russian, and Korean texts on the HMI.
- Removable terminal blocks for ease of wiring.
- Digital input for back-up level override from point level device.
- Communication options for HART, Modbus RTU, PROFIBUS PA, PROFIBUS DP, and PROFINET.
- Remote configuration and diagnostic management of supported sensors (SITRANS LR110, SITRANS LR120, SITRANS Probe LU240).
- Single or dual point level monitoring.
- Advanced process intelligence echo processing for reliable accurate measurement in difficult applications.
- Parameter back-up and copy functions.
- Auto False-Echo Suppression for fixed obstruction avoidance.
- IQ Guard for health monitoring, NE107 diagnostics, up to 200 saved echo profiles, event logging, data logging, parameter change logging, hundreds of diagnostics, limit monitoring, self check validation, parameter back-up and copy functions, and programming configuration backup/report.
- Real-time clock supporting energy saving algorithms for minimizing pump operation during high cost energy periods.
- Smart device connection for file storage and sharing via USB.
- Up to 6 independent programmable relays for pump control, alarms, or remote totalization.
- Time to spill/empty monitoring and alarming.
- Level, volume, and flow measurements in open channels, differential control, extended pump control, and alarm functions.
- Wall, panel, and remote panel mounting options.
- Remote configuration via EDD with SIMATIC PDM and SITRANS DTM via USB.
- MCERTS certified for open channel flow.
- Removable terminal blocks for ease of wiring.
- Patented digital receiver for improved performance in electrically noisy applications (close proximity to VSDs).

Application

SITRANS LT500 mA HART version can be used with SITRANS LR110, LR120, Probe LU240 or any level device generating a mA signal. The ultrasonic version can connect any EchoMax or legacy transducer. SITRANS LT500 offers true dual point monitoring and digital communications. SITRANS LT500 is low maintenance and economical. With its advanced control functions, it can operate pumps during lower cost time periods and manage pump rosters for efficiency.

SITRANS LT500 will monitor open channel flow and features advanced relay alarming and pump control functions as well as volume conversion.

- Key Applications: wet wells, flumes/weirs, bar screen control, hoppers, chemical storage, liquid storage, crusher bins, dry solids storage

Ovenstraat 29 | 8800 Roeselare | T. +32 (0)51 20 71 41 | www.fluxer.be | sales@fluxer.be

Design

SITRANS LT500 is available in wall, panel, or remote panel mounting options.

Selection and ordering data

SITRANS LT500 mA Hart version Continuous, non-contact, for liquids, slurries, and solids. Monitors level, volume, and volume flow, for virtually any application in a wide range of process industries.	Article No. 7ML60 ● ● - ● ● ● ● ● - ● A A ●
Click on the Article No. for the online configuration in the PIA Life Cycle Portal.	
Product brand[3]	
HydroRanger	0
MultiRanger	1
Feature set	
Level, Volume, and Flow[4]	3
Level, Volume, and Flow, high accuracy[5]	4
Sensor input type	
4 ... 20 mA input(s)	0
Number of measurement points	
Single point version	A
Dual point version	B
Relay output	
1 relay (1 Form A), 250 V AC	A
3 relays (2 Form A, 1 Form C), 250 V AC	B
6 relays (4 Form A, 2 Form C), 250 V AC	C
Mounting, enclosure design	
Wall mount, standard enclosure	0
Wall mount, 4 entries, M20 cable glands included	1
Panel mount	2
Remote panel mount	3
Type of protection	
Ordinary Locations/General Purpose (Non-Ex), $_{c}CSA_{US}$, $_{c}UL_{US}$ FM, CE, UKCA, RCM, EAC	0
Ex rated[1]	1
Removable data storage	
Included, (8 GB micro SD)	1
Input voltage	
12 ... 30 V DC	2
100 ... 230 V AC	3

Selection and ordering data	
Further designs	**Order code**
Please add "-Z" to Article No. and specify Order code(s).	
Stainless steel tag [13 x 45 mm (0.5 x 1.75 inch)]: Tag (device parameter, max. 32 characters) plate stainless steel 304/1.4301	**Y15**
Approvals	
CSA (USA & Canada)	
CSA Class I, Div. 2, Group A, B, C and D; Class II, Div 2, Group F & G; Class III	**E21**
Certificates	
Declaration of compliance 2.1 (EN 10204) - delivery meets order requirements	**C19**
Factory certificate 2.2 (EN 10204)	**C14**
Communication	
HART with 4 ... 20 mA active output[6]	**F01**
Modbus RTU	**F04**

Selection and ordering data	
PROFIBUS PA	**F05**
PROFIBUS DP	**F06**
PROFINET	**F07**
Specials	
Special design For customs, contact a local sales person. For more information please visit http://www.automation.siemens.com/aspa_app	**Y99**
Operating Instructions	
All literature is available to download for free, in a range of languages, at http://www.siemens.com/processinstrumentation/documentation	

Selection and ordering data (continued)

Selection and ordering data	
Optional equipment	**Article No.**
Tag, stainless steel, 12 x 45 mm, one text line, (max. 16 characters)	**7ML1930-1AC**
Barriers in a NEMA 4X/IP65 enclosure	**A5E50255823**
Barrier suitable for LR1xx & LU240 (STAHL: 9001/01-280-110-101)	**A5E50113513**
Sunshield/pipe mount plate, 304 Stainless steel	**7ML1930-1GA**
M12 IP65/IP67/IP69/IP69K external mount receptacle port to individual cable leads M20 mounting	**A5E53796231**
Ethernet cable 4 inch/100 mm long	**A5E53796237**
RJ45 external mount receptacle to receptacle adaptor	**A5E53796234**
USB cable, 2 m (6.56 ft), standard USB-B to USB-mini B	**7ML1930-1GD**
SITRANS RD100, loop powered display	**7ML5741-.....-.**
SITRANS RD150, remote digital display for 4 ... 20 mA and HART devices	**7ML5742-.....-....**
SITRANS RD200, universal input display with Modbus conversion	**7ML5740-.....-..**
SITRANS RD300, dual line display with totalizer and linearization curve and Modbus conversion	**7ML5744-.....-..**
Industrial Ethernet cables	**6XV1870-.....-..**
Spare parts	
Replacement motherboard, single point, includes DC power module	**A5E50113558**
Replacement motherboard, dual point, includes DC power module	**A5E50113557**
Replacement motherboard, single point, includes AC power module	**A5E50113542**
Replacement motherboard, dual point, includes AC power module	**A5E50113543**
Replacement lid with 4 button HMI	**A5E50113559**

Selection and ordering data	
Replacement lid with 4 button HMI panel mount version	**A5E50113560**
Replacement lid with 4 button HMI remote panel mount version	**A5E52897553**
Replacement lid with blind remote panel mount version	**A5E53276261**
Retrofit kit for wall mount to panel mount version	**A5E50114010**
Retrofit kit for wall mount to remote panel mount version	**A5E53276259**
Panel mount cable extension, 2.5 m (8.2 ft)	**7ML1930-1GF**
Remote panel mount gasket and fastener kit	**7ML1830-1PK**
Replacement terminal blocks for 4 ... 20 mA input(s) sensor type version	**A5E38824197**
Replacement SD card	**A5E50113554**
HART communications module	**A5E50113564**
PROFIBUS PA communications module	**A5E50113568**
Modbus RTU communications module	**A5E50113565**
PROFIBUS DP communications module	**A5E50113567**
PROFINET communications module	**A5E50113569**

1) Available only with order code E21 and Mounting, enclosure design option 0 or 1.
2) Available only with Sensor input type option 1.
3) Branding only affects the name marked on the label, no other difference in form or function.
4) MCERTS class 2 certified.
5) MCERTS class 1 certified.
6) HART communication card not required for standard mA output.

SITRANS LT500 Ultrasonic version **Continuous, non-contact, for liquids, slurries, and solids. Monitors level, volume, and volume flow, for virtually any application in a wide range of process industries.**	**Article No.** **7ML60** ● ● - ● ● ● ● ● - ● A A ●
Click on the Article No. for the online configuration in the PIA Life Cycle Portal.	
Product brand[3]	
HydroRanger	0
MultiRanger	1
Feature set	
Level, Volume, and Flow[4]	3
Level, Volume, and Flow, high accuracy[5]	4
Sensor input type	
Ultrasonic transducer input(s)	1
Number of measurement points	
Single point version	A
Dual point version	B
Relay output	
1 relay (1 Form A), 250 V AC	A
3 relays (2 Form A, 1 Form C), 250 V AC	B
6 relays (4 Form A, 2 Form C), 250 V AC	C
Mounting, enclosure design	
Wall mount, standard enclosure	0
Wall mount, 4 entries, M20 cable glands included	1
Panel mount	2
Remote panel mount	3

Selection and ordering data (continued)

SITRANS LT500 Ultrasonic version Continuous, non-contact, for liquids, slurries, and solids. Monitors level, volume, and volume flow, for virtually any application in a wide range of process industries.	Article No. 7ML60 ● ● - ● ● ● ● ● - ● A A ●
Type of protection	
Ordinary Locations/General Purpose (Non-Ex), CSA, $_{c}UL_{US}$, FM, CE, UKCA, RCM, EAC	0
Ex rated[1]	1
Removable data storage	
Included, (8 GB micro SD)	1
Input voltage	
12 ... 30 V DC	2
100 ... 230 V AC	3

Selection and ordering data	
Further designs	**Order code**
Please add "-Z" to Article No. and specify Order code(s).	
Stainless steel tag [13 x 45 mm (0.5 x 1.75 inch)]: Tag (device parameter, max. 32 characters) plate stainless steel 304/1.4301	**Y15**
Approvals	
CSA (USA & Canada)	
CSA Class I, Div. 2, Group A, B, C and D; Class II, Div 2, Group F & G; Class III	**E21**
Certificates	
Declaration of compliance 2.1 (EN 10204) - delivery meets order requirements	**C19**
Factory certificate 2.2 (EN 10204)	**C14**
Mass storage (SD card access via USB)	
Disable mass storage function with SD card (Required for USA)[2]	**J07**
Communication	
HART with 4 ... 20 mA active output[6]	**F01**
Modbus RTU	**F04**
PROFIBUS PA	**F05**
PROFIBUS DP	**F06**
PROFINET	**F07**
Specials	
Special design	**Y99**
For customs, contact a local sales person. For more information please visit http://www.automation.siemens.com/aspa_app	
Operating Instructions	
All literature is available to download for free, in a range of languages, at http://www.siemens.com/processinstrumentation/documentation	

Selection and ordering data	
Optional equipment	**Article No.**
Tag, stainless steel, 12 x 45 mm, one text line, (max. 16 characters)	**7ML1930-1AC**
Sunshield/pipe mount plate, 304 Stainless steel	**7ML1930-1GA**

Selection and ordering data	
Coaxial cable converter in a NEMA 4X/IP65 enclosure	**A5E53332217**
M12 IP65/IP67/IP69/IP69K external mount receptacle port to individual cable leads M20 mounting	**A5E53796231**
Ethernet cable 4 inch/100 mm long	**A5E53796237**
RJ45 external mount receptacle to receptacle adaptor	**A5E53796234**
USB cable, 2 m (6.56 ft), standard USB-B to USB-mini B	**7ML1930-1GD**
SITRANS RD100, loop powered display	**7ML5741-.....-.**
SITRANS RD150, remote digital display for 4 ... 20 mA and HART devices	**7ML5742-.....-....**
SITRANS RD200, universal input display with Modbus conversion	**7ML5740-.....-..**
SITRANS RD300, dual line display with totalizer and linearization curve and Modbus conversion	**7ML5744-.....-..**
Industrial Ethernet cables	**6XV1870-.....-..**
Spare parts	
Replacement motherboard, single point, US comes with DC power module	**A5E52897550**
Replacement motherboard, dual point, US comes with DC power module	**A5E52897552**
Replacement motherboard, single point, US comes with AC power module	**A5E52897548**
Replacement motherboard, dual point, US comes with AC power module	**A5E52897549**
Replacement lid with 4 button HMI	**A5E50113559**
Replacement lid with 4 button HMI panel mount version	**A5E50113560**
Replacement lid with 4 button HMI remote panel mount version	**A5E52897553**
Replacement lid with blind remote panel mount version	**A5E53276261**
Retrofit kit for wall mount to panel mount version	**A5E50114010**
Retrofit kit for wall mount to remote panel mount version	**A5E53276259**
Replacement terminal blocks for Ultrasonic transducer input(s) sensor type version	**A5E52897545**
Panel mount cable extension, 2.5 m (8.2 ft)	**7ML1930-1GF**
Remote panel Mount Gasket and Fastener Kit	**7ML1830-1PK**
Replacement SD card	**A5E50113554**
HART communications module	**A5E50113564**
PROFIBUS PA communications module	**A5E50113568**
Modbus RTU communications module	**A5E50113565**

Selection and ordering data (continued)

Selection and ordering data	
PROFIBUS DP communications module	**A5E50113567**
PROFINET communications module	**A5E50113569**

1) Available only with order code E21 and Mounting, enclosure design option 0 or 1.
2) Available only with Sensor input type option 1.
3) Branding only affects the name marked on the label, no other difference in form or function.
4) MCERTS class 2 certified.
5) MCERTS class 1 certified.
6) HART communicationm card not required for standard mA output.

Technical specifications

SITRANS LT500 mA HART version	
Mode of operation	Level, space, distance, volume, flow, head, level difference, level average, totalization
Sensor input, mA HART version	
• Number of inputs	1 or 2
• PV measurement	Advanced process intelligence
• Terminal voltage	Max. 26 V, Min. 18 V (0 ... 22.6 mA)
• Wiring	2 conductor, twisted, shielded, 0.5 ... 0.75 mm² (22 ... 18 AWG)
• Max. cable length	500 m (1 640.42 ft)
• Sensor input communication	• 4 ... 20 mA • HART protocol, for supported sensors: SITRANS LR110, LR120, SITRANS Probe LU240
4 ... 20 mA sensor input	
• Range	Dependent on connected sensor up to 10^{10}
• Resolution	0.025 % of full scale
• Accuracy	0.1 % of full scale
HART sensor input	Resolution, range, and accuracy are dependent on connected sensor
Digital input	
• Quantity	2
• Switching threshold, low	0 ... 0.5 V DC
• Switching threshold, high	10 ... 50 V DC
• Input current	Max. 3 mA
• Bias voltage supply	24 V
Analog output	
• Quantity	1 or 2
• Range	0 ... 20 mA or 4 ... 20 mA isolated
• Max. load	750 Ω
• Resolution	0.1 % of range
• Update time	Up to 1 measurement per second
• Accuracy	±20 µA
• Startup current	3.6 mA
• Fail-safe	Programmable as high, low, last reliable, set value, or hold per NAMUR NE43
• Wiring	2 conductor, twisted, shielded, 0.5 ... 0.75 mm² (22 ... 18 AWG)
Relay output	
• Quantity	Up to 6, 4 form A and 2 form C
• Rating	5 A at 250 V AC, 5 A at 30 V DC, non-inductive
• Durability	50 000 operations min. per relay (5 A at 30 V DC, resistive load)

Technical specifications (continued)

SITRANS LT500 mA HART version	
• Minimum applicable load	10 mA at 12 V
• Fail-safe	Programmable as energized, de-energized, or hold
• Wiring	Copper conductors per local requirements to meet 250 V 5 A contact rating
Rated operating conditions	
Installation conditions	
• Location	Indoor/outdoor
• Installation category	II
• Pollution degree	4
Ambient conditions	
• Ambient temperature	-20 ... +50 °C (-4 ... +122 °F)
• Storage temperature	-20 ... +50 °C (-4 ... +122 °F)
• Humidity	Maximum relative humidity 80 % for temperatures up to 31 °C decreasing linearly to 50 % relative humidity at 40 °C
• Altitude	2 000 m (6 565 ft) maximum
• Vibration resistence	
- Vibration broad-band random, according to IEC 60068-2-64	• 10 ... 200 Hz, 0.0104 g²/Hz • 200 ... 500 Hz, 0.005 g²/Hz
- Vibration non-stationary including shock, according to IEC 60068-2-27	• Peak Acceleration: 25 g • Duration: 6 ms • Number of impacts per direction: 1 000 • Impact directions: 6
• Bump/shock resistence	25 g
EMC performance	IEC/EN 61326-1, EN 55011 (Class A)
Design	
Weight	
• Wall mount	1.22 kg (2.68 lb)
• Panel mount	1.35 kg (2.97 lb)
• Remote panel mount	1.73 kg (3.80 lb)
Enclosure	
• Material	High impact polycarbonate lexan per UL 94V-0
• Degree of protection	
• Wall mount	IP65/Type 4X
• Panel mount	IP54/Type 3
• Remote panel mount	IP65/Type 3 (front panel), IP20 (enclosure)
• UV exposure	F1 rating per UL746C
Display and control	
• LCD display	60 x 40 mm (2.36 x 1.57 inch) LCD, 240 x 160 pixels resolution graphical HMI with NE107 diagnostic data, echo profile display and backlight
• Menu navigation	4 push button keys, rated for 1 million button cycles over 10 years

Technical specifications (continued)

SITRANS LT500 mA HART version	
Update time	1 second or less
Memory	Program and parameters stored in non-volatile Flash memory
Real time clock memory retention without power	48 hours
CPU speed	96 MHz
Memory card	8 GB Industrial micro SD
Power supply	
• AC version	100 ... 230 V AC, ±15 %, 50/60 Hz, 36 VA (17 W)
• DC version	12 ... 30 V DC (20 W)
Certificates and approvals	• CE, UKCA, RCM, EAC, FM, $_{C}CSA_{US}$, $_{C}UL_{US}$, KC
	• RoHS, China RoHS, WEEE, REACH
	• $_{C}CSA_{US}$ Class I, Div. 2, Group A, B, C and D; Class II, Div 2, Group F & G; Class III
	• MCERTS
Communication	
• Service interface	USB 2.0 mini A cable
• Optional Fieldbus	• HART 7, with Active/Passive 4 ... 20 mA
	• Modbus RTU
	• PROFIBUS PA per profile 4.01
	• PROFIBUS DP per profile 4.01
	• PROFINET
• Remote configuration via service interface	• EDD via SIMATIC PDM
	• SITRANS DTM via PACTware

SITRANS LT500 Ultrasonic version	
Mode of operation	Level, space, distance, volume, flow, head, difference, average, totalization
Sensor input, ultrasonic version	
• Number of inputs	1 or 2
• PV measurements	Advanced process intelligence
• Measuring range	0.3 ... 60 m (1 ... 196 ft), transducer dependent
• Transducer frequency	10 ... 52 kHz
• Ultrasonic transducer	Compatible transducers: all EchoMax and ST-H series transducers, legacy coaxial cable connections via converter
Accuracy	
• Error in measurement	• Standard operation: ±1 mm (0.04 inch) plus 0.17 % of measured distance
	• High accuracy OCM: ±1 mm (0.04 inch), within 3 m (9.84 ft) range (with XRS-5 and TS-3)
• Resolution	• Standard operation: 0.1 % of range or 2 mm (0.08 inch), whichever is greater
	• High accuracy OCM: 0.6 mm (0.02 inch), within 3 m (9.84 ft) range
	• Accuracy per IEC 60770-1
• Temperature compensation	• -40 ... +150 °C (-40 ... +300 °F)
	• Integral temperature sensor in transducer
	• External TS-3 temperature sensor (optional)
	• Programmable fixed temperature values
Wiring	Transducer: 2 copper conductors, twisted, with foil shield/drain wire, 300 V 0.5 ... 0.75 mm² (22 ... 18 AWG)

Technical specifications (continued)

SITRANS LT500 Ultrasonic version	
• Max. cable length	365 m (1 200 ft)
Analog input	
• Range	Dependent on connected sensor up to 10[10]
• Resolution	0.025 % of full scale
• Accuracy	0.1 % of full scale
• Polling rate	>1 Hz
• Maximum cable length	500 m (1640.42 ft)
• Supply voltage	24 V
Digital input	
• Quantity	2
• Switching threshold, low	0 ... 0.5 V DC
• Switching threshold, high	10 ... 50 V DC
• Input current	Max. 3 mA
• Bias voltage supply	24 V
Analog output	
• Quantity	1 or 2
• Range	0 ... 20 mA or 4 ... 20 mA isolated
• Max. load	750 Ω
• Resolution	0.1 % of range
• Update time	Up to 1 measurement per second
• Accuracy	±20 µA
• Startup current	3.6 mA
• Fail-safe	Programmable as high, low, last reliable, set value, or hold per NAMUR NE43
• Wiring	2 conductor, twisted, shielded, 0.5 ... 0.75 mm² (22 ... 18 AWG)
Relay output	
• Quantity	Up to 6, 4 form A and 2 form C
• Rating	5 A at 250 V AC, 5 A at 30 V DC, non-inductive
• Durability	50 000 operations min. per relay (5 A at 30 V DC, resistive load)
• Minimum applicable load	10 mA at 12 V
• Fail-safe	Programmable as energized, de-energized, or hold
• Wiring	Copper conductors per local requirements to meet 250 V 5 A contact rating
System synchronization	Up to 25 units on the bus (only SITRANS LT500s). Up to 16 units on the bus (if 1 legacy controller is included).
Rated operating conditions	
Installation conditions	
• Location	Indoor/outdoor
• Installation category	II
• Pollution degree	4
Ambient conditions	
• Ambient temperature	-20 ... +50 °C (-4 ... +122 °F)
• Storage temperature	-20 ... +50 °C (-4 ... +122 °F)
• Humidity	Maximum relative humidity 80 % for temperature up to 31 °C decreasing linearly to 50 % relative at 40 °C
• Altitude	2 000 m (6 565 ft) maximum

Technical specifications (continued)

SITRANS LT500 Ultrasonic version	
• Vibration resistence	
- Vibration broad-band random, according to IEC 60068-2-64	• 10 ... 200 Hz, 0.0104 g^2/Hz • 200 ... 500 Hz, 0.005 g^2/Hz
- Vibration non-stationary including shock, according to IEC 60068-2-27	• Peak Acceleration: 25 g • Duration: 6 ms • Number of impacts per direction: 1 000 • Impact directions: 6
• Bump/shock resistence	25 g
EMC performance	IEC/EN 61326-1, EN 55011 (Class A)
Design	
Weight	
• Wall mount	1.22 kg (2.68 lb)
• Panel mount	1.35 kg (2.97 lb)
• Remote panel mount	1.73 kg (3.80 lb)
Enclosure	
• Material	High impact polycarbonate lexan per UL 94V-0
• Degree of protection	
• Wall mount	IP65/Type 4X
• Panel mount	IP54/Type 3
• Remote panel mount	IP65/Type 3 (front panel), IP20 (enclosure)
UV exposure	F1 rating per UL746C
Display and control	
• LCD display	60 x 40 mm (2.36 x 1.57 inch) LCD, 240 x 160 pixels resolution graphical HMI with NE107 diagnostic data, echo profile display and backlight
• Menu navigation	4 push button keys, rated for 1 million button cycles over 10 years
Update time	1 second or less
Memory	Program and parameters stored in non-volatile Flash memory
Real time clock memory retention without power	48 hours
CPU speed	96 MHz
Memory card	8 GB Industrial micro SD
Power supply	
• AC version	100 ... 230 V AC, ±15 %, 50/60 Hz, 36 VA (17 W)
• DC version	12 ... 30 V DC (20 W)
Certificates and approvals	• $_{c}CSA_{US}$, CE, UKCA, RCM, EAC, FM, $_{c}UL_{US,}$ KC • RoHS, China RoHS, WEEE, REACH • $_{c}CSA_{US}$ Class I, Div. 2, Group A, B, C and D; Class II, Div 2, Group F & G; Class III • MCERTS
Communication	
• Service interface	USB 2.0 mini A cable
• Optional Fieldbus	• HART 7, with Active/Passive 4 ... 20 mA • Modbus RTU • PROFIBUS PA per profile 4.01 • PROFIBUS DP per profile 4.01 • PROFINET
• Remote configuration via service interface	• EDD via SIMATIC PDM • SITRANS DTM via PACTware

Dimensional drawings

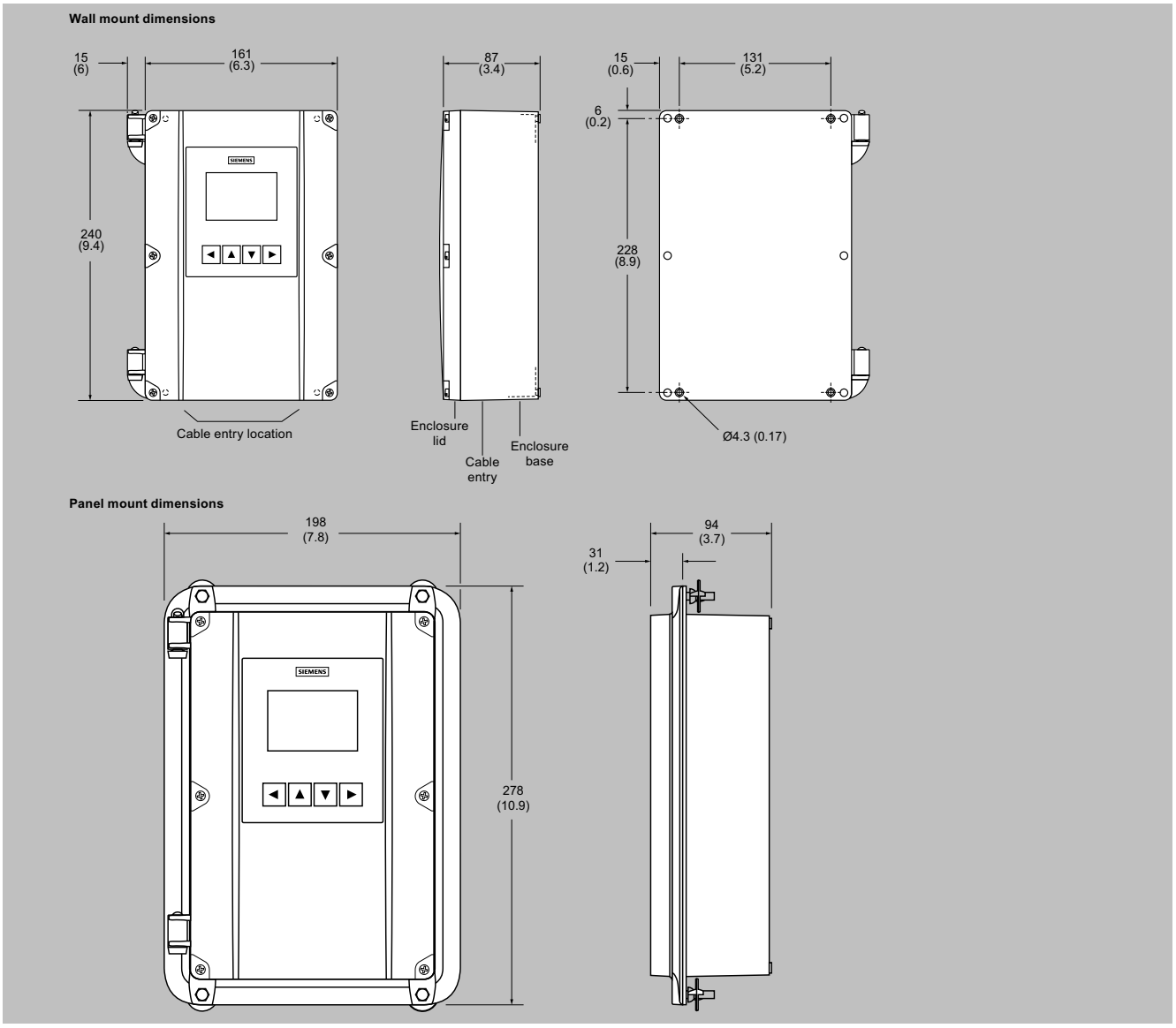

SITRANS LT500, dimensions in mm (inch)

Dimensional drawings (continued)

SITRANS LT500 Remote panel unit

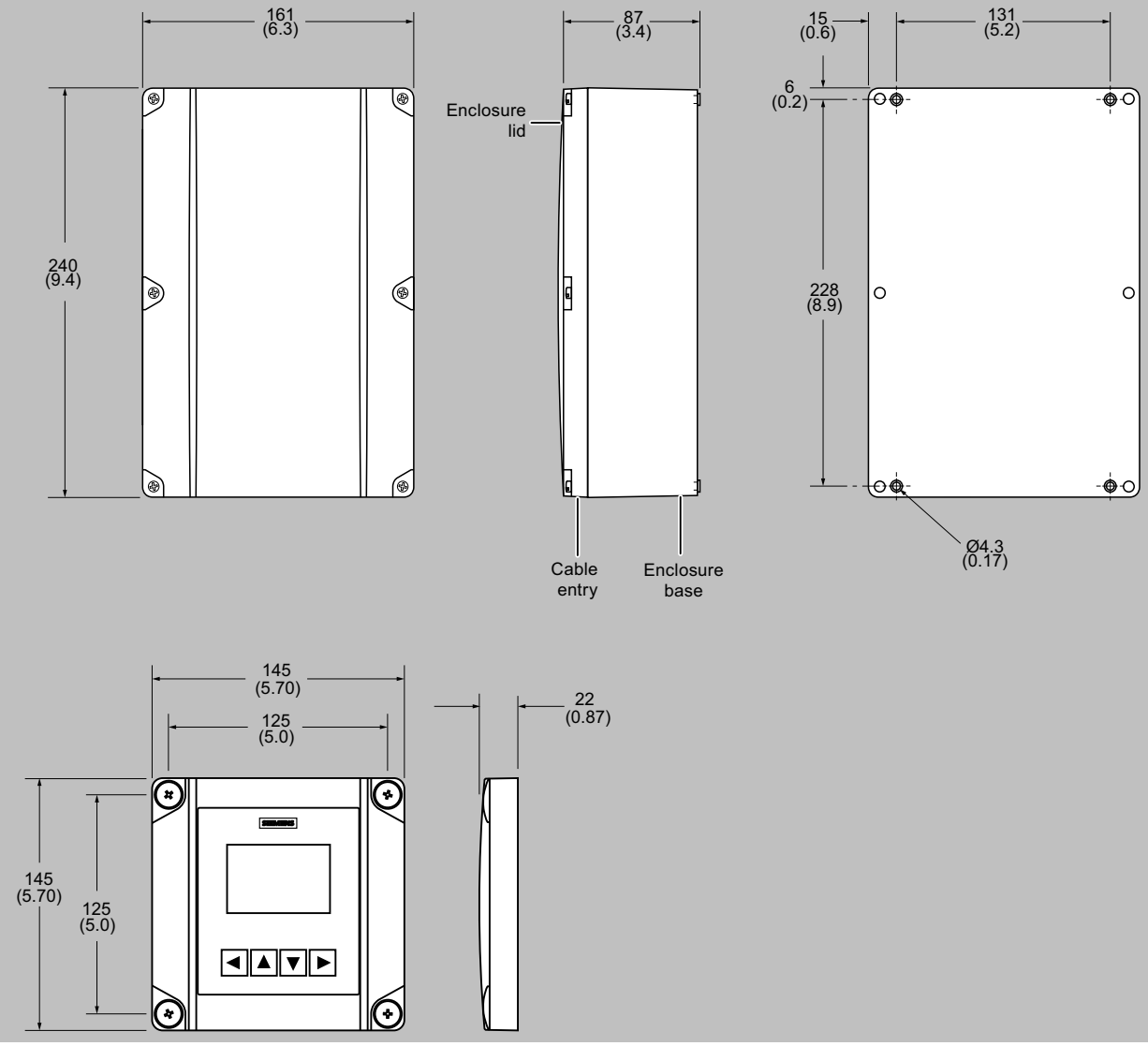

SITRANS LT500 Remote panel unit, dimensions in mm (inch)

Circuit diagrams

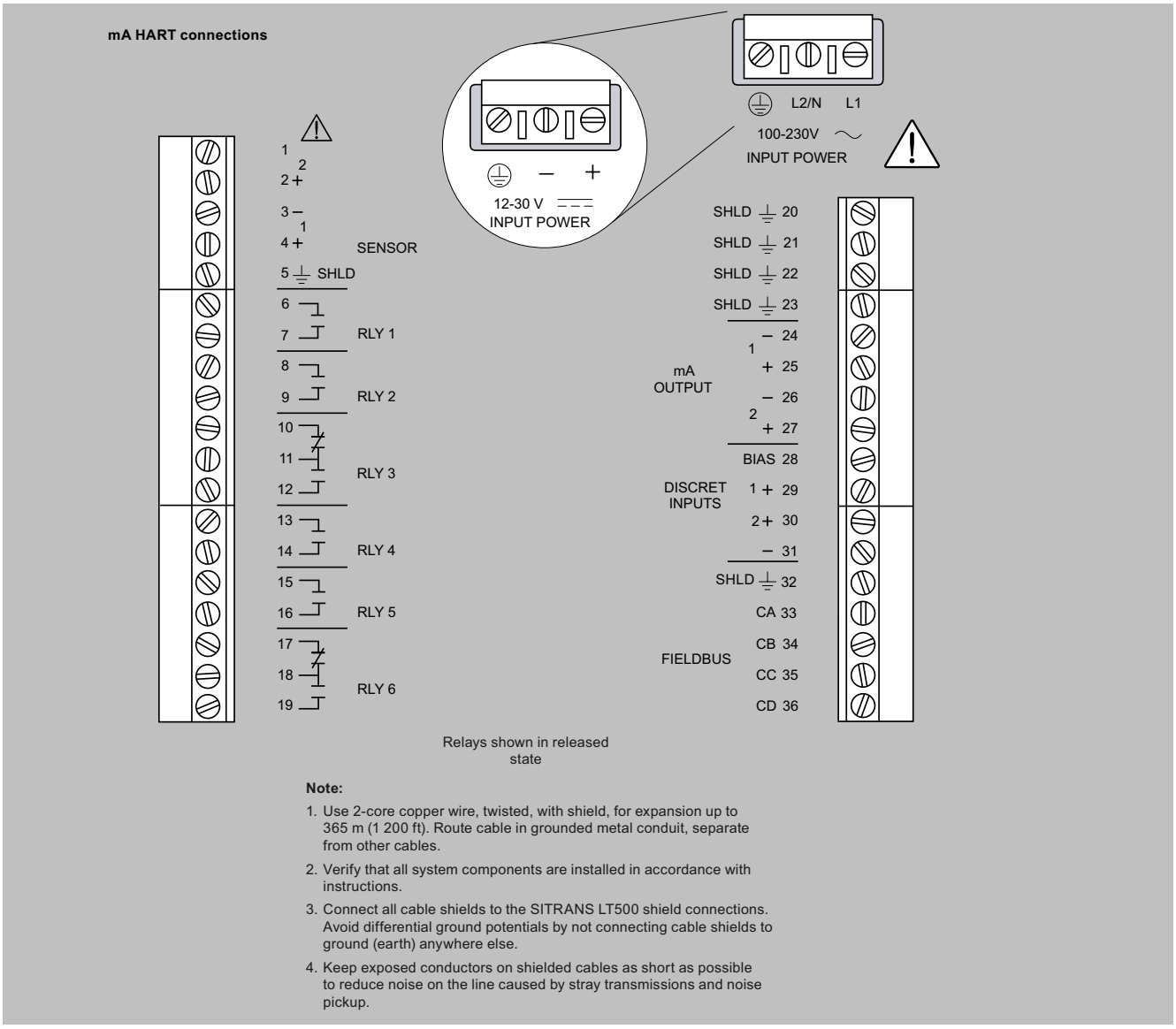

SITRANS LT500 mA HART connections

Circuit diagrams (continued)

Ultrasonic transducer connections

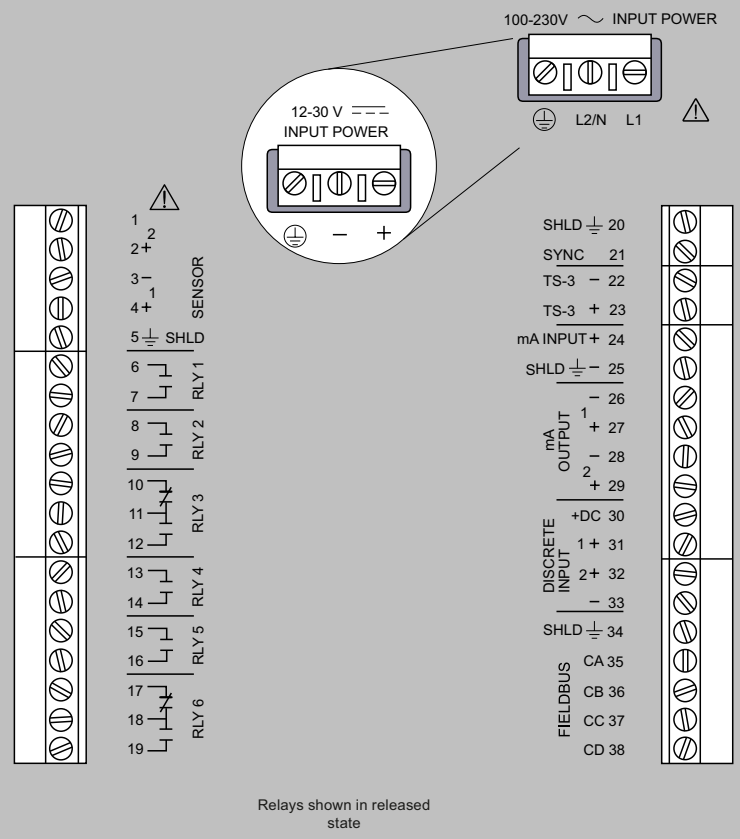

Relays shown in released state

Note:

1. Use 2-core copper wire, twisted, with shield, for expansion up to 365 m (1 200 ft). Route cable in grounded metal conduit, separate from other cables.
2. Verify that all system components are installed in accordance with instructions.
3. Connect all cable shields to the SITRANS LT500 shield connections. Avoid differential ground potentials by not connecting cable shields to ground (earth) anywhere else.
4. Keep exposed conductors on shielded cables as short as possible to reduce noise on the line caused by stray transmissions and noise pickup.

SITRANS LT500 Ultrasonic transducer connections