SITRANS LR500 series

Overview



SITRANS LR500 series are 80 GHz radar level transmitters for continuous monitoring of liquids, slurries, and solids in storage and process vessels including high temperature and pressure, to a range of 120 m (393 ft).

Benefits

- Continuous level measurement up to 120 m (393 ft)
- Easy installation and simple startup
- Programming using 4-button HMI, mobile IQ app using Bluetooth, or SIMATIC PDM
- IQ Guard for health monitoring, NE107 diagnostic messaging and quality verification report
- Communication using HART 7
- Graphical HMI with echo profile display and backlight
- Near Range Suppression for automatic detection and suppression of material build up noise
- Process Intelligence signal processing
- 1 mm accuracy in accordance with IEC 60770-1
- Suitable for API 2350
- Auto False Echo Suppression for fixed obstruction avoidance
- Low power consumption with EPD (environmental product declaration)
- Optional SLOD (second line of defense) for toxic material safety
- 100 000 points of data logging memory for process control analysis and optimization

Application

SITRANS LR500 series radar level transmitters include a graphical local user interface that improves setup and operation by including an intuitive Quick Start Wizard, and echo profile displays for diagnostic support.

The 80 GHz frequency creates a narrow, focused beam allowing for smaller antenna and decreasing sensitivity to obstructions.

SITRANS LR500 series radar level transmitters measure superbly on low dielectric media with high accuracy and repeatability. A very fast measurement response is ideal for process control applications.

- Key Applications: SITRANS LR500 Radar level transmitters are available with four antenna types for level measurement of liquid, slurry, and solid materials:
  - Threaded lens antenna
  - Flanged encapsulated antenna
  - Polymeric horn antenna
  - Flanged lens antenna

Selection and ordering data

SITRANS LR500 Series Continuous, non-contact, 120 m (394 ft) range, for liquids, slurries, and solids in storage and process vessels, including high temperature and pressure.	Article No.
Antenna versions	
Threaded lens antenna	**7ML751.-.....-....**
Flanged encapsulated antenna	**7ML753.-.....-....**
Polymeric horn antenna	**7ML755.-.....-....**
Flanged lens antenna	**7ML758.-.....-....**

FLUXER Ovenstraat 29 | 8800 Roeselare | T. +32 (0)51 20 71 41 | www.fluxer.be | sales@fluxer.be

Technical specifications

SITRANS LR500 Series	
Mode of operation	
Measuring principle	Radar level measurement
Frequency	W band (80 GHz nominal)
Minimum detectable distance	0 mm from end of the antenna (antenna dependent, reference conditions)
Maximum measuring range	120 m (394 ft), antenna dependent
Output	
HART	Version 7
• Analog output	4 ... 20 mA
• Fail-safe	Programmable as high, low, or hold (loss of echo)
• Update time	Up to 3 measurements per second
Performance (according to reference conditions IEC60770-1)	
Maximum measured error	1 mm (0.039 inch)
Influence of ambient temperature	Less than 3 mm/10 K and maximum ±5 mm over full range from -40 ... +80 °C (-40 ... +176 °F)
	API 3.1B Inventory
Rated operating conditions	
Installation conditions	
• Location	Indoor/outdoor
Ambient conditions (enclosure)	
• Ambient temperature	-40 ... +80 °C (-40 ... +176 °F)
• Storage temperature	-40 ... +80 °C (-40 ... +176 °F)
• Installation category	I
• Pollution degree	4
Medium conditions	
Dielectric constant ϵ_r	> 1.6, antenna and application dependent
Process temperature	-196 ... 250 °C (-321 ... 482 °F), antenna and seal dependent
Process pressure	Up to 40 bar g (580 psi g), process connection and temperature dependent.
Design	
Weight	Range from 2 ... 20 kg (4.4 ... 44.1 lb), version dependent
Enclosure	
• Material	Aluminum, polyester powder-coated, C5 corrosion equivalent
• Cable inlet	2 x M20 x 1.5 or 2 x ½" NPT
Degree of protection	Type 4X, Type 6, IP66, IP68
Display (local)	Optional graphical HMI with NE107 diagnostic data, echo profile display and backlight
Trend Logging	100 000 points, up to 8 variables including level, distance, space, volume, signal strength, confidence, temperature
Limit Monitoring	Min/Max of 3 variables with count function
Terminal voltage	Available from HMI or EDD
Asset management	Diagnostic logbook, parameter change logbook
Power supply	
4 ... 20 mA/HART	Nominal 24 V DC (max. 30 V DC) with max. 800 Ω
Certificates and approvals	
Ordinary locations	FM, $_c$CSA$_{US}$, CE
Radio	CE, FCC, IC, RCM

Technical specifications (continued)

Hazardous areas	ATEX, IECEx, UKCA Intrinsically Safe Ex ia IIC T6 Ga ATEX, IECEx, UKCA Intrinsically Safe Ex ia IIIC Txx°C Da ATEX, IECEx, UKCA Dust Ignition proof Ex ta IIIC Txx°C Da ATEX. IECEx, CSA, FM, UKEX, NEPSI, PESO, INMETRO EX II 1GD EX ia IIC T6 ... T4 Ga Ex ia IIIC T_{200} 95 °C Da Ta Ex ta IIIC T_{200} 137 °C Da CSA/FM Intrinsically Safe Ex ia Class I, II, III, Div 1, Groups A, B, C, D, E, F, G T6 CSA/FM Non-Incendive Class I, Div. 2, Groups A, B, C, D T6
Materials	3.1 of EN 10204, NACE MR 0175 and MR 0103, 2.2 of EN 10204, PMI
Pressure	CRN, PED
Canadian Registration Number (CRN) Note: CRN is not applicable for process temperatures below -40 °C (-40 °F).	
• British Columbia	0F7424.1
• Alberta	0F22399.2
• Saskatchewan	0F7424.13
• Manitoba	0F7424.14
• Ontario	0F7424.15
• Quebec	0F07424.16
• Atlantic Canada and Territories	0F1384.9870YNT
Materials	3.1 of EN 10204, NACE MR 0175 and MR 0103, 2.2 of EN 10204, PMI
Programming	
PC	SIMATIC PDM
Display (local)	Optional graphical HMI with NE107 diagnostic data, echo profile display and backlight
SITRANS mobile IQ app	Optional AW050 Bluetooth module, for non-hazardous applications only

Options

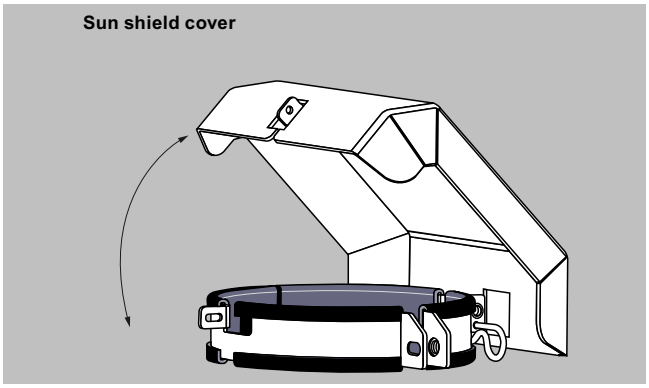

SITRANS LR500 series sunshield

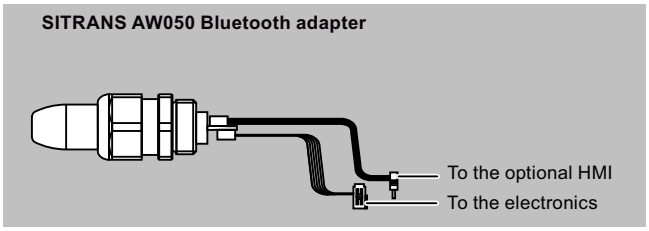

SITRANS AW050 Bluetooth adapter

Dimensional drawings

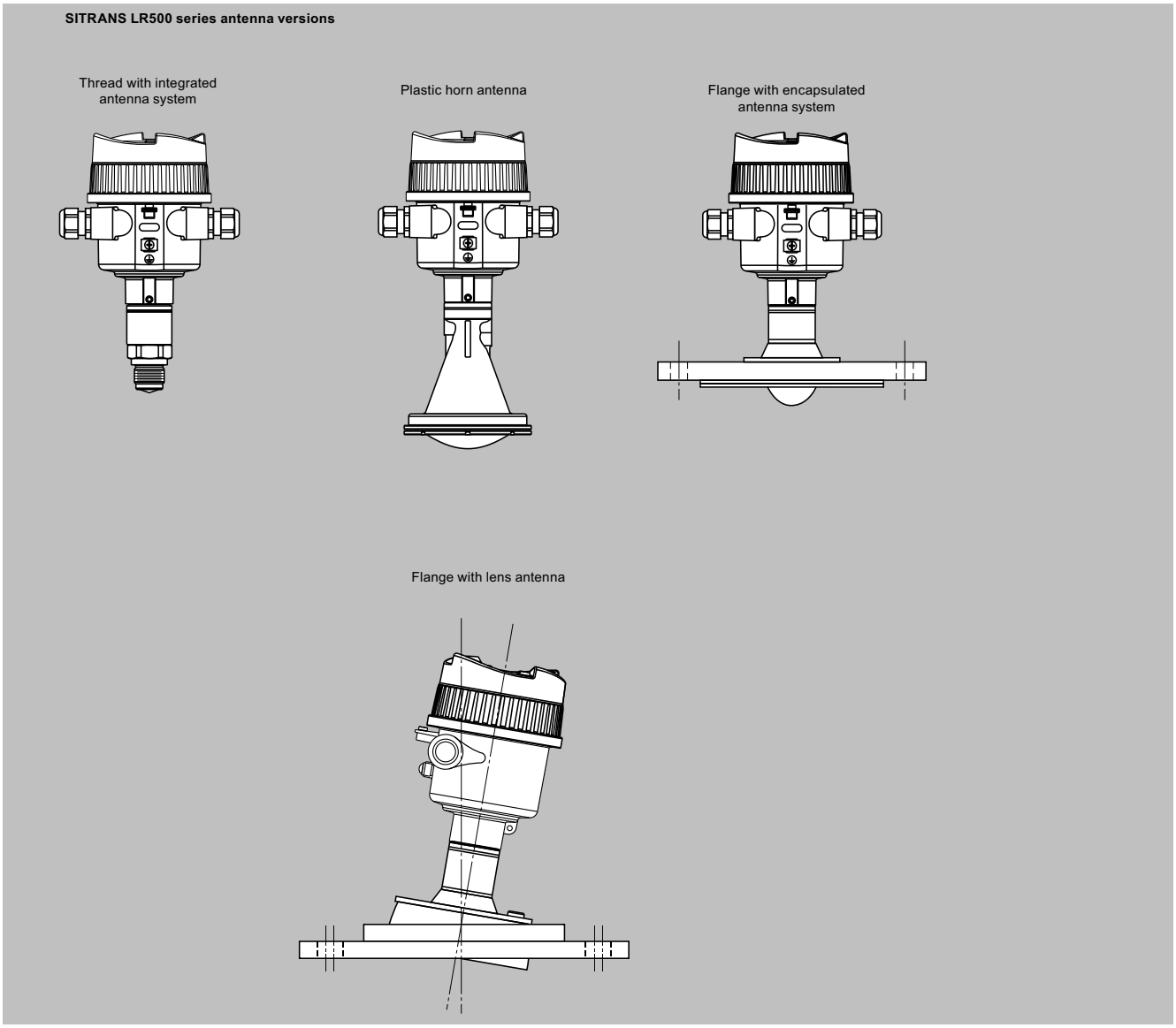

SITRANS LR500 Series antenna versions

Overview



SITRANS LR530 flange encapsulated antenna provides continuous monitoring of liquids and slurries to a range of 120 m (394 ft).The PTFE lens and integrated gasket is easy to clean and ideal for highly corrosive media.

Configuration

Installation of SITRANS LR530

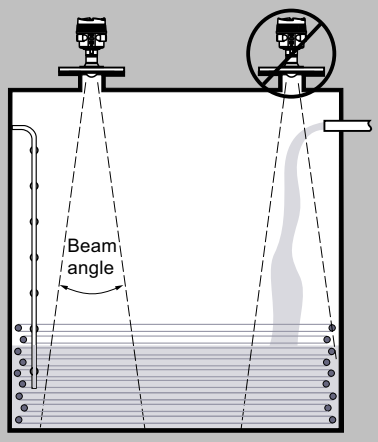

Size	Beam angle
1", DN25	10°
2", DN50	6°
≥3", DN80	3°

SITRANS LR530 nozzle mounting restrictions

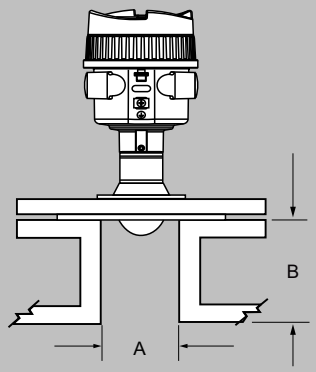

Nozzle diameter "A"		Nozzle height "B"	
50 mm	2"	≤200 mm	≤ 7.9"
80 mm	3"	≤400 mm	≤ 15.8"
100 mm	4"	≤500 mm	≤ 19.7"
150 mm	6"	≤800 mm	≤ 31.5"

SITRANS LR530 Nozzle installation

Selection and ordering data

SITRANS LR530 Flanged encapsulated PTFE Continuous, non-contact, 120 m (394 ft) range, for liquids and slurries.	Article No. 7ML753	●	-	●	●	●	●	0	-	●	●	●	●
Click on the Article No. for the online configuration in the PIA Life Cycle Portal.													
Communications													
4 ... 20 mA, HART		0											
Sealing material of the antenna/process connection													
PTFE / PTFE / -60 ... +150 °C (-76 ... +302 °F)				0									
PTFE / PTFE / -196 ... +200 °C (-321 ... +392 °F)				1									
Process connection type and material													
Flange DN25 PN6, raised face, Form B1, EN1092-1, DIN2501 / 316/316L					K	A							
Flange DN50 PN6, raised face, Form B1, EN1092-1, DIN2501 / 316/316L					K	B							
Flange DN80 PN6, raised face, Form B1, EN1092-1, DIN2501 / 316/316L					K	C							
Flange DN100 PN16, raised face, Form B1, EN1092-1, DIN2501 / 316/316L					K	D							
Flange DN150 PN16, raised face, Form B1, EN1092-1, DIN2501 / 316/316L					K	E							
Flange DN200 PN16, raised face, Form B1, EN1092-1, DIN2501 / 316/316L					K	F							
Flange DN25 PN40, raised face, Form B1, EN1092-1, DIN2501 / 316/316L					L	A							
Flange DN50 PN40, raised face, Form B1, EN1092-1, DIN2501 / 316/316L					L	B							
Flange DN80 PN40, raised face, Form B1, EN1092-1, DIN2501 / 316/316L					L	C							
Flange DN100 PN40, raised face, Form B1, EN1092-1, DIN2501 / 316/316L					L	D							
Flange DN150 PN40, raised face, Form B1, EN1092-1, DIN2501 / 316/316L					L	E							
Flange 1" 150 lb RF, ASME B16.5 / 316/316L					M	A							
Flange 2" 150 lb RF, ASME B16.5 / 316/316L					M	B							
Flange 3" 150 lb RF, ASME B16.5 / 316/316L					M	C							
Flange 4" 150 lb RF, ASME B16.5 / 316/316L					M	D							
Flange 6" 150 lb RF, ASME B16.5 / 316/316L					M	E							
Flange 8" 150 lb RF, ASME B16.5 / 316/316L					M	F							
Flange 1" 300 lb RF, ASME B16.5 / 316/316L					N	A							
Flange 2" 300 lb RF, ASME B16.5 / 316/316L					N	B							
Flange 3" 300 lb RF, ASME B16.5 / 316/316L					N	C							
Flange 4" 300 lb RF, ASME B16.5 / 316/316L					N	D							
Flange 6" 300 lb RF, ASME B16.5 / 316/316L					N	E							
Flange 8" 300 lb RF, ASME B16.5 / 316/316L					N	F							
Flange DN25 5K RF, JIS / 316/316L					V	A							
Flange DN50 10K RF, JIS / 316/316L					V	B							
Flange DN80 10K RF, JIS / 316/316L					V	C							
Flange DN100 10K RF, JIS / 316/316L					V	D							
Flange DN150 10K RF, JIS / 316/316L					V	E							
Second line of defense (SLOD) gas tight seal													
SLOD not included							0						
SLOD included							1						
Enclosure													
Single compartment enclosure										4			
Type of protection													
Non Ex - General purpose											A		
Intrinsically safe Ex ia / IS (Class I, II, III, Division 1)[1]											B		
Non-incendive (Class I, Division 2)[2]											D		
Dust Ignition proof, Ex t / DIP (Class II, Division 1)[1][4]											M		
Electrical connection													
M20												F	
½" NPT												K	
Local HMI													
None, with blind lid													0
Included, with blind lid													1
Included, with window lid													3

Selection and ordering data (continued)

Selection and Ordering data	Order code
Further designs	
Please add "**-Z**" to Article No. and specify Order code(s).	
Pressure Test Certificates	
Pressure test certificate inspection certificate EN 10204-3.1 (AD2000-A4 / EN12266-1)[8)]	**C01**
Pressure test certificate inspection certificate EN 10204-3.1 (ASME B31.1 / B31.3)[9)]	**C02**
Test certificates	
Manufacturer's test certificate M to DIN 55350, Part 18 and to ISO 9000 - performance	**C11**
Inspection certificate EN 10204-3.1, material	**C12**
Inspection certificate EN 10204-3.1, material with NACE MR0175 and MR0103	**C13**
Test report EN 10204-2.2, material	**C14**
Test report EN 10204-3.1, PMI test - XRF (X-Ray Fluorescence)	**C15**
Tagging	
Stainless steel tag [69 mm x 50 mm (2.71 x 1.97 inch)]	
Tag (device parameters, max. 27 characters), plate, stainless steel 304/1.4301	**Y15**
Regional Ex Approval [3)5)]	
NEPSI (China)	**E27**
ATEX (Europe), IECEx (International), and UKEX (Great Britain)	**E47**
CSA (Canada) and FM (USA)	**E48**
ATEX (Europe), IECEx (International), UKEX (Great Britain), CSA (Canada), and FM (USA)	**E49**

1) Available only with one of -Z Regional hazardous Approval options.
2) Available only with -Z Regional Ex Approval option E48.
3) Not available with Type of Protection option A.
4) Available only with Second line of defense gas tight seal option 1.
5) Only one regional hazardous approval can be selected
8) Available only with Process connection type and material options KA ... KF, LA ... LE, and VA ... VE.
9) Available only with Process connection type and material options MA ... MF and NA ... NF.

Selection and Ordering data	Order code
Operating instructions	
All literature is available to download for free, in a range of languages, at	
http://www.siemens.com/processin-strumentation/	
Accessories	
Sun shield cover	**A5E52107153**
AW050 BlueTooth module kit, M20 (General purpose only)	**A5E51857118**

Selection and Ordering data	Order code
AW050 BlueTooth module kit, ½" NPT (General purpose only)	**A5E52095588**
Lightning Arrestor M20	**7MF7903-7AB**
Lightning Arrestor ½" NPT	**7MF7903-7AC**
SIMATIC RTU3010C compact, remote data manager with alarming	**6NH3112-0BA00-0XX0**
SIMATIC RTU3030C compact, remote data manager with alarming	**6NH3112-3BA00-0XX0**
Intrinsically Safe barrier	**7NG4124-1AA00**
SITRANS RD100, loop powered display	**7ML5741-.....-.**
SITRANS RD150, remote digital display for 4 to 20 mA and HART devices	**7ML5742-.....-....**
SITRANS RD200, universal input display with Modbus conversion	**7ML5740-.....-..**
SITRANS RD300, dual line display with totalizer and linearization curve and Modbus conversion	**7ML5744-.....-..**
SITRANS LT500, a versatile, single and multi-vessel level monitor/controller for virtually any application in a wide range of industries.	**7ML60..-.....-....**
For applicable back up point level switch - see point level measurement catalog	
Spare parts	
Electronic module, LR510, LR530, <DN80 / 3 inch, mA/HART	**A5E53276263**
Electronic module, LR530, LR550, LR580, >DN50 / 2 inch, mA/HART	**A5E53276249**
LR500 lid with window, Non-Exd/XP	**A5E53276250**
LR500 no window, Non-Exd/XP	**A5E53276252**
HMI graphical display, with interconnection cable	**A5E53276247**
Spring washers (x 40) kit for all process connection sizes	**A5E53276258**
Spring washers x 4, M10 and 3/8", stainless steel	**A5E53308674**
Spring washers x 4, ½", stainless steel	**A5E53308675**
Spring washers x 4, M12, stainless steel	**A5E53308676**
Spring washers x 8, M16 and 5/8", stainless steel	**A5E53308677**
Spring washers x 12. M20 and ¾", stainless steel	**A5E53308678**
Spring washers x 12, M24 and 7/8", stainless steel	**A5E53308679**

Technical specifications

SITRANS LR530	
Mode of operation	
Recommended measuring range Note: Maximum measurement range depends on the flange size, refer to the table in dimension drawings.	• DN 25: 20 m (66 ft) • DN 50, 2": 30 m (98 ft) • ≥DN 80, 3": 120 m (394 ft)
Medium conditions	
Process temperature	• Standard version: -60 ... +150 °C (-76 ... +302 °F) • Thermal extension version: -196 ... +200 °C (-320 ... +392 °F)
Process pressure	Process connection and temperature dependent. See Pressure/Temperature curves for more information.
Design	
Flange material	316/316L stainless steel
Wetted materials	
• Antenna lens	PTFE lens with integral PTFE gasket
Process connections	***Raised face, Form B1, EN1092-1. DIN2501*** • Flange DN25 PN6 • Flange DN50 PN6 • Flange DN50 PN6 • Flange DN100 PN16 • Flange DN150 PN16 • Flange DN200 PN16 • Flange DN25 PN40 • Flange DN50 PN40 • Flange DN80 PN40 • Flange DN100 PN40 • Flange DN150 PN40 ***Raised face, ASME B16.5*** • Flange 1" 150lb • Flange 2" 150lb • Flange 3" 150lb • Flange 4" 150lb • Flange 6" 150lb • Flange 8" 150lb • Flange 1" 300lb • Flange 2" 300lb • Flange 3" 300lb • Flange 4" 300lb • Flange 6" 300lb • Flange 8" 300lb ***Raised face, JIS*** • Flange DN25 5K • Flange DN50 10K • Flange DN80 10K • Flange DN100 10K • Flange DN150 10K
Second line of defence option (SLOD)	Internal fused glass seal

Characteristic curves

SITRANS LR530 Flanged encapsulated antenna, EN 1092-1

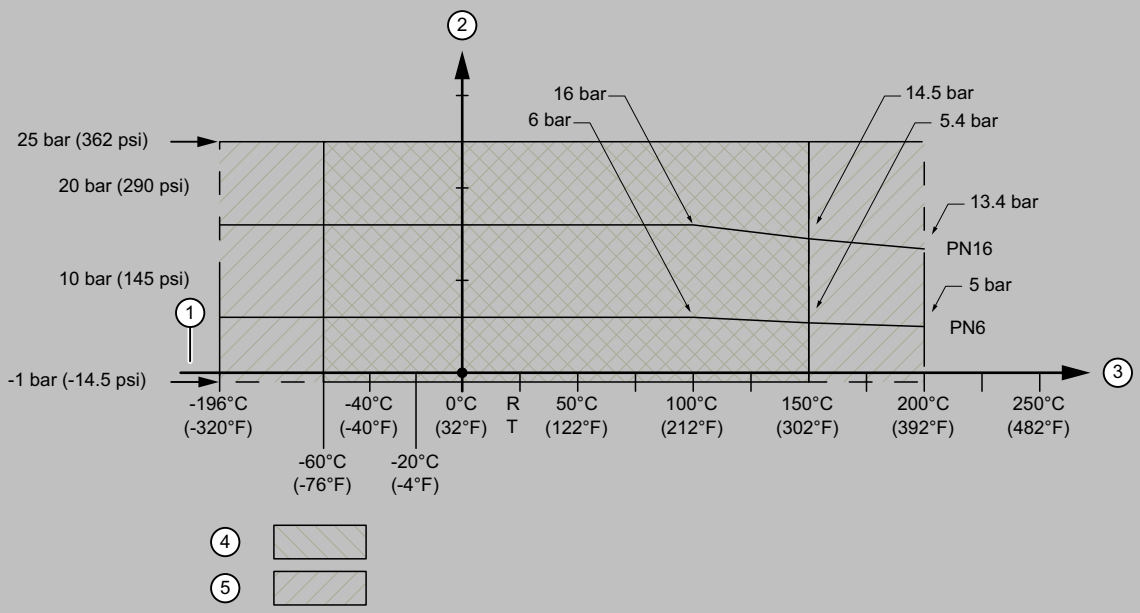

1. Atmospheric pressure
2. Allowable operating pressures
3. Allowable operating temperatures
4. PTFE without thermal extension
5. PTFE with thermal extension

Note: PN40 flange maximum allowable working pressure is 25 bar (362 psi).

SITRANS LR530 Flanged encapsulated antenna, process pressure/temperature derating curve, EN 1092-1

Characteristic curves (continued)

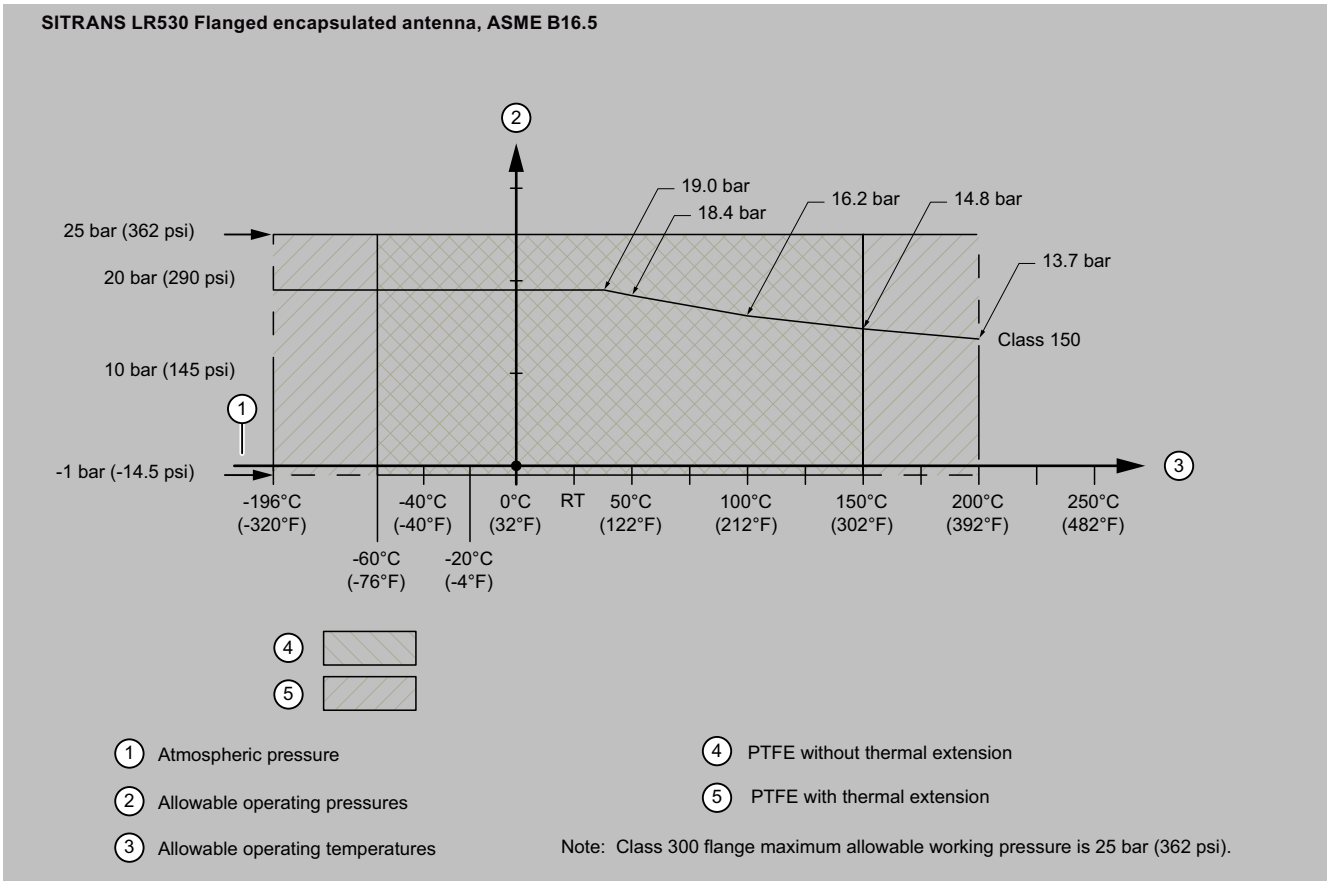

SITRANS LR530 Flanged encapsulated antenna, process pressure/temperature derating curve, ASME B16.5

Characteristic curves (continued)

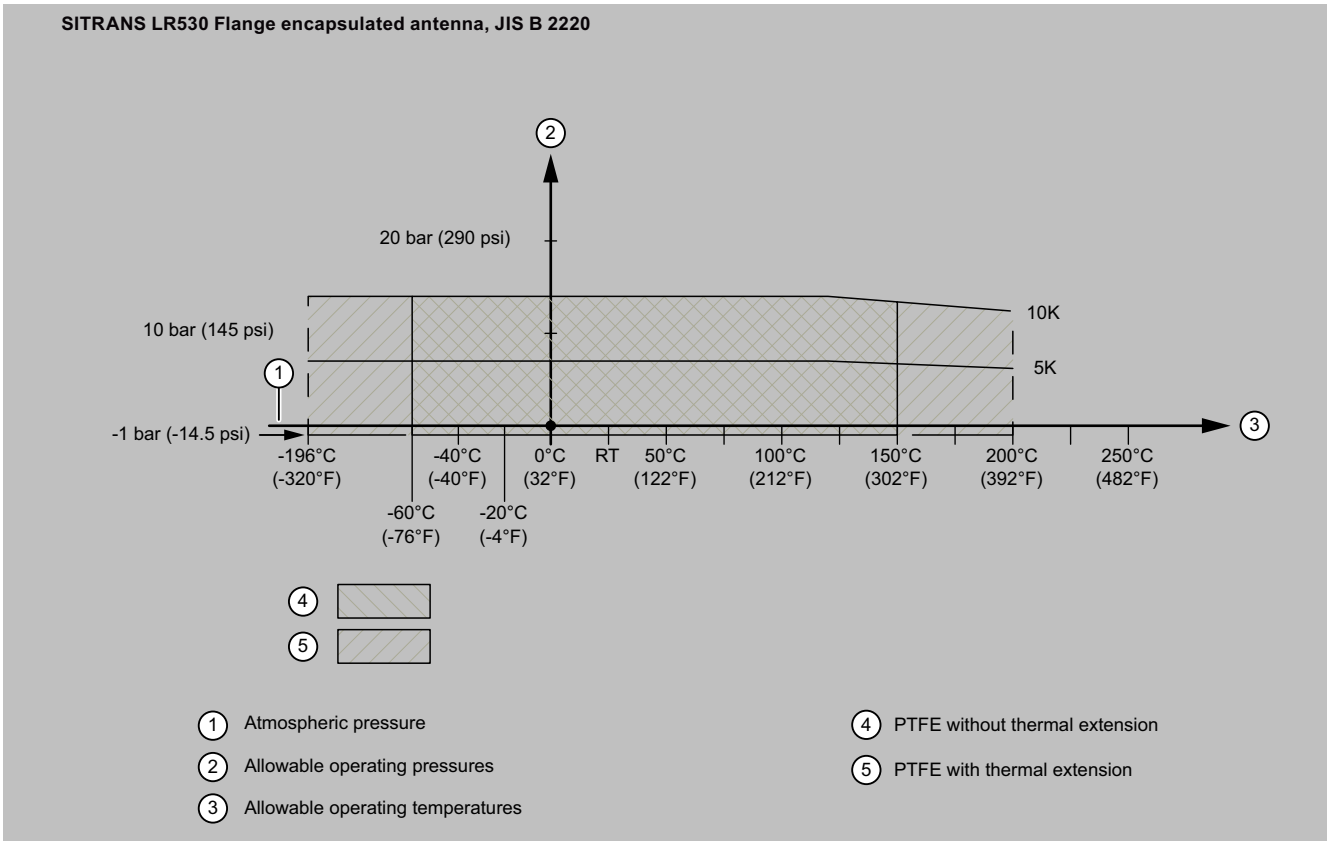

SITRANS LR530 Flanged encapsulated antenna, process pressure/temperature derating curve, JIS B 2220

Dimensional drawings

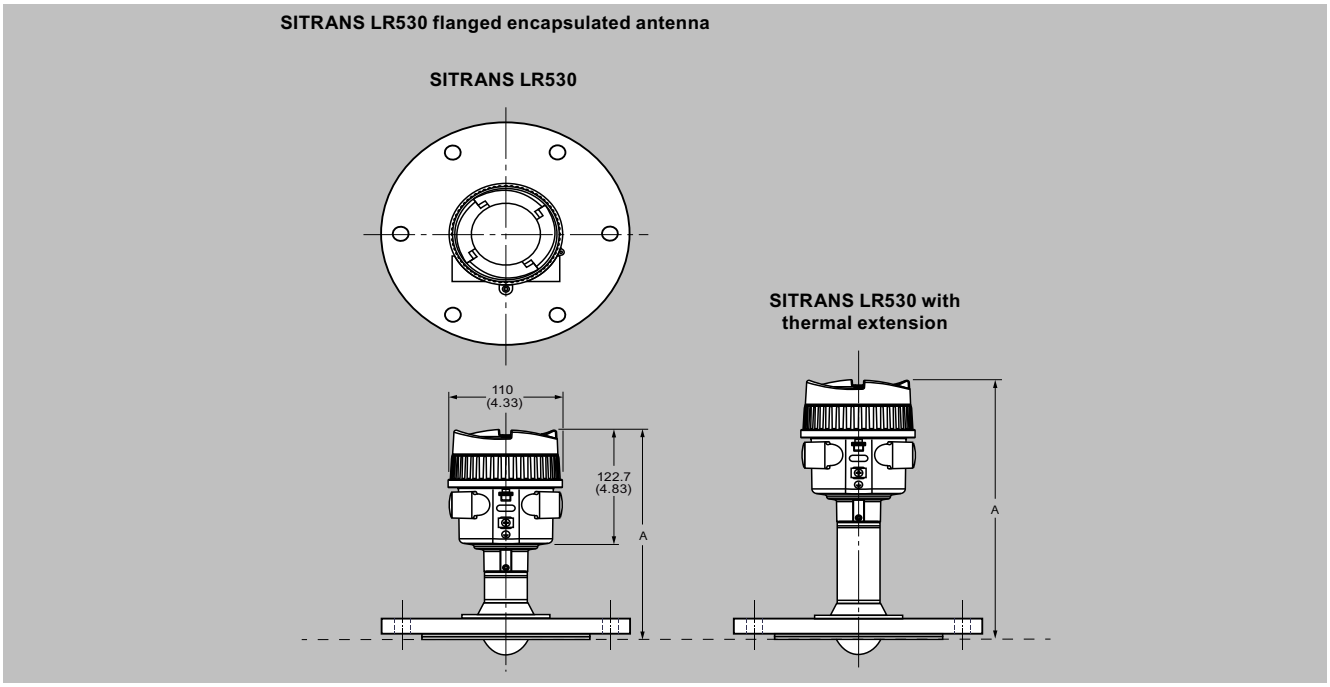

SITRANS LR530 Flanged encapsulated antenna, dimensions in mm (inch)

Process connection type	A mm (inch)	A with thermal extension	Beam angle	Recommended max. range [m (ft)]	Flange O.D. [mm (inch)]	Bolt hole circle Ø [mm (inch)]	Bolt hole Ø [mm (inch)]	No. of bolt holes	Flange thickness- [mm (inch)]
Flange DN25 PN6, raised face, Form B1, EN1092-1, DIN2501 / 316/316L	201.7 (7.94)	221.7 (8.73)	10°	20 (65.6)	100 (3.94)	75 (2.95)	11 (0.43)	4	16 (0.63)
Flange DN50 PN6, raised face, Form B1, EN1092-1, DIN2501 / 316/316L	216.1 (8.51)	268.1 (10.56)	6°	30 (98.4)	140 (5.51)	110 (4.33)	14 (0.55)	4	20 (0.79)
Flange DN80 PN6, raised face, Form B1, EN1092-1, DIN2501 / 316/316L	243.2 (9.57)	295.2 (11.62)	3°	120 (393.7)	190 (7.48)	150 (5.91)	18 (0.71)	4	20 (0.79)
Flange DN100 PN16, raised face, Form B1, EN1092-1, DIN2501 / 316/316L	243.2 (9.57)	295.2 (11.62)	3°	120 (393.7)	220 (8.66)	180 (7.09)	18 (0.71)	8	20 (0.79)
Flange DN150 PN16, raised face, Form B1, EN1092-1, DIN2501 / 316/316L	243.2 (9.57)	295.2 (11.62)	3°	120 (393.7)	285 (11.22)	240 (9.45)	22 (0.87)	8	22 (0.87)
Flange DN200 PN16, raised face, Form B1, EN1092-1, DIN2501 / 316/316L	243.2 (9.57)	295.2 (11.62)	3°	120 (393.7)	340 (13.39)	295 (11.61)	22 (0.87)	12	24 (0.94)

Dimensional drawings (continued)

Process connection type	A mm (inch)	A with thermal extension	Beam angle	Recommended max. range [m (ft)]	Flange O.D. [mm (inch)]	Bolt hole circle Ø [mm (inch)]	Bolt hole Ø [mm (inch)]	No. of bolt holes	Flange thickness- [mm (inch)]
Flange DN25 PN40, raised face, Form B1, EN1092-1, DIN2501 / 316/316L	201.7 (7.94)	221.7 (8.73)	10°	20 (65.6)	115 (4.53)	85 (3.35)	14 (0.55)	4	18 (0.71)
Flange DN50 PN40, raised face, Form B1, EN1092-1, DIN2501 / 316/316L	216.1 (8.51)	268.1 (10.56)	6°	30 (98.4)	165 (6.5)	125 (4.92)	18 (0.71)	4	20 (0.79)
Flange DN80 PN40, raised face, Form B1, EN1092-1, DIN2501 / 316/316L	243.2 (9.57)	295.2 (11.62)	3°	120 (393.7)	200 (7.87)	160 (6.3)	18 (0.71)	8	24 (0.94)
Flange DN100 PN40, raised face, Form B1, EN1092-1, DIN2501 / 316/316L	243.2 (9.57)	295.2 (11.62)	3°	120 (393.7)	235 (9.25)	190 (7.48)	22 (0.87)	8	24 (0.94)
Flange DN150 PN40, raised face, Form B1, EN1092-1, DIN2501 / 316/316L	243.2 (9.57)	295.2 (11.62)	3°	120 (393.7)	300 (11.81)	250 (9.84)	26 (1.02)	8	28 (1.1)
Flange 1" 150lb RF, ASME B16.5 / 316/316L	243.2 (9.57)	295.2 (11.62)	10°	20 (65.6)	108 (4.25)	79.2 (3.13)	15.7 (0.62)	4	16 (0.63)
Flange 2" 150lb RF, ASME B16.5 / 316/316L	216.1 (8.51)	268.1 (10.56)	6°	30 (98.4)	152.4 (6)	120.7 (4.75)	19.1 (0.75)	4	19.1 (0.75)
Flange 3" 150lb RF, ASME B16.5 / 316/316L	243.2 (9.57)	295.2 (11.62)	3°	120 (393.7)	190.5 (7.5)	152.4 (6)	19.1 (0.75)	4	23.9 (0.94)
Flange 4" 150lb RF, ASME B16.5 / 316/316L	243.2 (9.57)	295.2 (11.62)	3°	120 (393.7)	228.6 (9)	190.5 (7.5)	19.1 (0.75)	8	23.9 (0.94)
Flange 6" 150lb RF, ASME B16.5 / 316/316L	243.2 (9.57)	295.2 (11.62)	3°	120 (393.7)	279.4 (11)	241.3 (9.5)	22.4 (0.88)	8	25.4 (1)
Flange 8" 150lb RF, ASME B16.5 / 316/316L	243.2 (9.57)	295.2 (11.62)	3°	120 (393.7)	342.9 (13.5)	298.5 (11.75)	22.4 (0.88)	8	28.4 (1.12)
Flange 1" 300lb RF, ASME B16.5 / 316/316L	201.7 (7.94)	221.7 (8.73)	10°	20 (65.6)	124 (4.88)	88.9 (3.5)	19.1 (0.75)	4	17.5 (0.69)
Flange 2" 300lb RF, ASME B16.5 / 316/316L	216.1 (8.51)	268.1 (10.56)	6°	30 (98.4)	165.1 (6.5)	127 (5)	19.1 (0.75)	8	22.4 (0.88)
Flange 3" 300lb RF, ASME B16.5 / 316/316L	243.2 (9.57)	295.2 (11.62)	3°	120 (393.7)	209.5 (8.25)	168.1 (6.62)	22.4 (0.88)	8	28.4 (1.12)
Flange 4" 300lb RF, ASME B16.5 / 316/316L	243.2 (9.57)	295.2 (11.62)	3°	120 (393.7)	254 (10)	200.2 (7.88)	22.4 (0.88)	8	31.8 (1.25)
Flange 6" 300lb RF, ASME B16.5 / 316/316L	243.2 (9.57)	295.2 (11.62)	3°	120 (393.7)	317.5 (12.5)	269.7 (10.62)	22.5 (0.89)	12	36.6 (1.43)
Flange 8" 300lb RF, ASME B16.5 / 316/316L	243.2 (9.57)	295.2 (11.62)	3°	120 (393.7)	381 (15)	330.2 (13)	25.4 (1)	12	41.1 (1.63)

Dimensional drawings (continued)

Process connection type	A mm (inch)	A with thermal extension	Beam angle	Recommended max. range [m (ft)]	Flange O.D. [mm (inch)]	Bolt hole circle Ø [mm (inch)]	Bolt hole Ø [mm (inch)]	No. of bolt holes	Flange thickness- [mm (inch)]
Flange DN25 5K RF, JIS / 316/316L	201.7 (7.94)	221.7 (8.73)	10°	20 (65.6)	95 (3.74)	75 (2.95)	12 (0.47)	4	16 (0.63)
Flange DN50 10K RF, JIS / 316/316L	216.1 (8.51)	268.1 (10.56)	6°	30 (98.4)	155 (6.1)	120 (4.72)	19 (0.75)	4	20 (0.79)
Flange DN80 10K RF, JIS / 316/316L	243.2 (9.57)	295.2 (11.62)	3°	120 (393.7)	185 (7.28)	150 (5.91)	19 (0.75)	8	20 (0.79)
Flange DN100 10K RF, JIS / 316/316L	243.2 (9.57)	295.2 (11.62)	3°	120 (393.7)	210 (8.27)	175 (6.89)	19 (0.75)	8	20 (0.79)
Flange DN150 10K RF, JIS / 316/316L	243.2 (9.57)	295.2 (11.62)	3°	120 (393.7)	280 (11.02)	240 (9.45)	23 (0.91)	8	22 (0.87)