Level Measurement

Continuous level measurement

Radar level transmitters / SITRANS LR120

Overview



SITRANS LR120 is a compact radar transmitter for continuous level measurement of liquids and solids to a range of 30 m (98.4 ft).

Benefits

- Bluetooth connectivity for easy setup with SITRANS mobile IQ.
- Chemically resistant PVDF enclosure.
- HART 7.0 or Modbus RTU communication for intelligent integration into your application.
- W band FMCW radar yields narrow beam with small antenna for superior performance in applications with obstructions.
- Approved for open air applications outside of a tank.
- 2 mm accuracy and zero near range distance yields optimum inventory management capability.
- Submergence shield accessory prevents build up on sensor during flooding conditions.
- Hazardous area variants available for safe use in explosive gas or dust environments.

Application

SITRANS LR120 is a W band FMCW radar level transmitter, packaged in a hermetically sealed PVDF enclosure for years of trouble-free reliable measurement service.

4 to 20 mA loop powered with HART [optional 4-wire Modbus RTU], providing accurate level measurement to ranges of 30 m (98.4 ft). Its long range, narrow beam make LR120 suitable for wet wells with obstructions or solids level measurement, for example aggregates or plastic pellets. Programming is convenient using the Bluetooth connection and SITRANS mobile IQ application on your smart device.

Version 2023

Selection and ordering data

SITRANS LR120 Radar level transmitter Continuous, non-contact, 30 m (98.4 ft) range, for liquids, slurries, and solids, integrated cable connection	Article No. 7ML532	●	-	●	●	A	0	6	-	0	●	●	0
Click on the Article No. for the online configuration in the PIA Life Cycle Portal.													
Communications													
HART (4 ... 20 mA)		0											
Modbus RTU[4)6)]		3											
Bluetooth function													
Without				0									
With				1									
Cable length													
5 m					A								
10 m					B								
30 m					C								
50 m					D								
100 m					E								
Type of protection													
Non Ex (ordinary locations) $_{c}FM_{US}$, $_{c}CSA_{US}$, CE, RCM[2)]											A		
Ex i (ia) (Gas Ex-Zone 0/Class I, Div. 1) Dust Ex-Zone 20, 21, Class II & III Div. 1[1)]											B		
Ex ib mb, Ex ta, ta/tb, Zone 1, 1/2, Zone 20, 21, 22, (Class I, Div. 2), Class II & III, Div. 1[1)3)]											G		
Electrical connection of the cable entry													
1" BSPT												H	
1" NPT												P	

Selection and ordering data	Order Code
Further designs	
Please add "**-Z**" to Article No. and specify Order code(s).	
Tag (device parameter, max. 32 characters) plate stainless steel 304/1.4301	**Y15**
Inspection certificate 3.1 (EN 10204) - device with test data	**C25**
CFMUS, $_{c}CSA_{US}$, ATEX, IECEx	**E49**
INMETRO, IA MASC	**E25**
NEPSI, CCOE	**E27**
ATEX, IECEx	**E47**
CSA-Japan-Ex	**E29**
EACEx[5)]	**E24**
WHG and VLAREM II	**E61**

Accessories	Article No.
Accessories	
Submergence shield kit	**A5E49069764**
Easy Aimer 2, aluminum, NPT with ¾" x 1" PVC coupling	**7ML1830-1AQ**
Easy Aimer 2, aluminum with M20 adapter and 1" and 1½" BSPT aluminum couplings	**7ML1830-1AX**
Easy Aimer 304, NPT with 1" stainless steel coupling	**7ML1830-1AU**
Easy Aimer 304, with M20 adapter and 1" and 1½" BSPT 304 stainless steel couplings	**7ML1830-1GN**
Bracket, 316L Stainless steel,1 inch mount, 80 mm (3.1 inch) offset	**A5E50507509**
Bracket, 316L Stainless steel, 1 inch mount, 200 mm (7.9 inch) offset	**A5E50507511**
Bracket, 316L Stainless steel, 1.5 inch mount, 80 mm (3.1 inch) offset	**A5E50507514**

Selection and ordering data (continued)

Accessories	Article No.
Bracket, 316L Stainless steel, 1.5 inch mount, 200 mm (7.9 inch) offset	A5E50507516
FMS-200 universal box bracket, mounting kit	7ML1830-1BK
FMS-210 channel bracket, wall mount	7ML1830-1BL
FMS-220 extended channel bracket, wall mount	7ML1830-1BM
FMS-310 channel bracket, floor mount	7ML1830-1BN
FMS-320 extended channel bracket, floor mount	7ML1830-1BP
FMS-350 bridge channel bracket, floor mount (see Mounting Brackets catalog page for more information)	7ML1830-1BQ
1" NPT locknut, plastic	7ML1830-1DS
1" BSP locknut, plastic	7ML1830-1DR
Plastic adapter 1" BSP - 20 mm	7ML1830-1EA
Plastic adapter 1" NPT	7ML1930-1FX
Plastic adapter 1" NPT/M20	7ML1830-1EF
SIMATIC RTU3010C compact, remote data manager with alarming	6NH3112-0BA00-0-XX0
SIMATIC RTU3030C compact, remote data manager with alarming	6NH3112-3BA00-0-XX0
Intrinsically Safe barrier	7NG4124-1AA00
SITRANS RD100, loop powered display - see Chapter 7	7ML5741-.....-.
SITRANS RD150, remote digital display for 4 to 20 mA and HART devices - see Chapter 7	7ML5742-.....-....
SITRANS RD200, universal input display with Modbus conversion - see Chapter 7	7ML5740-.....-..
SITRANS RD300, dual line display with totalizer and linearization curve and Modbus conversion - see Chapter 7	7ML5744-.....-..
SITRANS LT500, a versatile, single and multi-vessel level monitor/controller for virtually any application in a wide range of industries.	7ML60..-.....-....
For applicable back up point level switch - see point level measurement section	

1) Must be ordered in combination with order codes E49, E25, E27, E47 E29, or E24.
2) Not available in combination with order codes E49, E25, E27, E47, E29, or E24
3) When ordered in combination with NPT thread types, this option is available with any order code. When ordered in combination with BSPP or BSPT thread types, this option is only available with order codes E49, E25, E27 or E47, E29
4) Available only with Type of protection options A and G.
5) Available only with Type of protection option B.
6) Available only with Bluetooth option 1.

Technical specifications

SITRANS LR120	
Mode of operation	
Measuring principle	W band FMCW radar
Measuring range	0 ... 30 m (0 ... 98.4 ft)
Frequency	80 GHz nominal
Beam angle	4°
Power Supply	
HART	
• Voltage	12 ... 35 V DC
• Current	4 ... 20 mA
Modbus	
• Voltage	8 ... 30 V DC
• Current	38 mA at 8 V DC/17 mA at 30 V DC
Communications	
4 ... 20 mA	HART 7.0
Modbus (4-wire option)	RTU
Accuracy	± 2 mm (range 0.25 ... 30 m), ± 10 mm (range 0 ... 0.25 m)
Rated operating conditions	
Vessel pressure	-1 ... +3 bar (14.50 ... 43.51 psi g)
Ambient temperature	-40 ... +80 °C (-40 ... +176 °F)
Process temperature	-40 ... +80 °C (-40 ... +176 °F)
Storage temperature	-40 ... +80 °C (-40 ... +176 °F)
Design	
Weight	0.7 kg (1.5 lb), plus 0.1 kg/m (0.2 lb/ft) cable length
Material	
• Enclosure	PVDF
• Submergence shield	• Polypropylene • Silicone O-ring
Degree of protection	IP66/IP68
Cable connection	1" NPT or 1" BSPT threaded connection
• HART	Length options: 5 ... 100 m (16.4 ... 328.1 ft), 2 conductor, twisted with shield 18 AWG, PVC jacket
• Modbus version	Length options: 5 ... 100 m (16.4 ... 328.1 ft), 4 conductor, twisted pairs, 22 AWG, polyurethane jacket
Certificates and approvals	
	CE, $_{c}$FM$_{US}$, $_{c}$CSA$_{US}$, ATEX, IECEx, EACEx, CSA-Japan-Ex, RCM, INMETRO, NEPSI, CCOE, PESO, FDA/(EG)1935/2004
Radio	CE, FCC, IC, Anatel, ICASA, NCC, KC, CITC, RCM, WPC, Telec, NBTC, MCMC
Marine	ABS, CCS, DNV-GL, LR, NK, RINA
Canadian Registration Number (CRN)	
• British Columbia	0F22218.51
• Alberta	0F20596.2
• Saskatchewan	0F2002.3
• Manitoba	0F7032.4
• Ontario	0F22218.5
• Quebec	0F05183.6
• New Brunswick	0F1490.07
• Nova Scotia	0F1490.08
• Prince Edward Island	0F1490.09
• Newfoundland and Labrador	0F1490.0
• Yukon	0F1490.0Y
• Northwest Territories	0F1490.0T
• Nunavut	0F1490.0N

Technical specifications (continued)

SITRANS LR120	
Programming	
SITRANS mobile IQ app	SITRANS mobile IQ is a Bluetooth app that provides an intuitive interface to quickly configure, set up and monitor SITRANS LR100 series.
SIMATIC PDM	SIMATIC PDM allows for remote PC configuration and diagnostics (for installation on a network).
SITRANS DTM	

Dimensional drawings

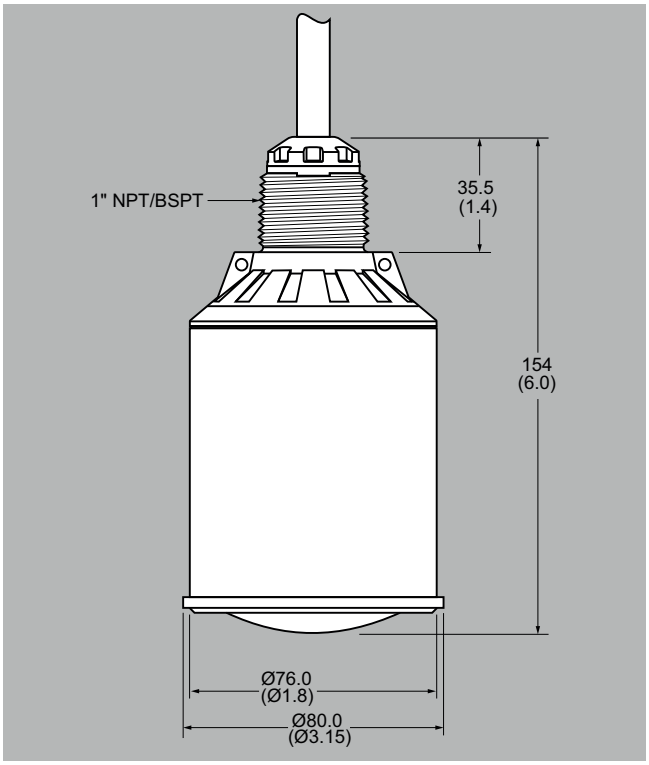

SITRANS LR120, dimensions in mm (inch)

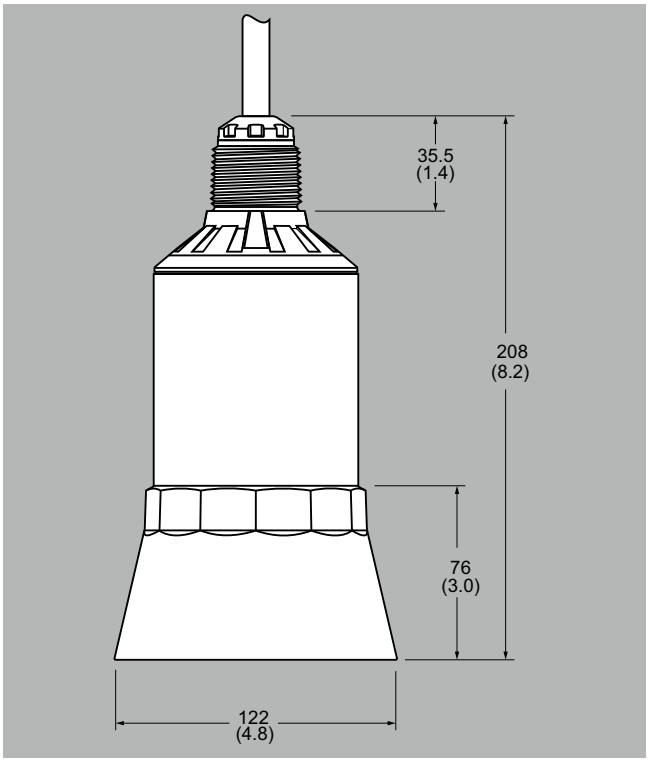

SITRANS LR120 Submergence shield accessory, dimensions in mm (inch)

Dimensional drawings (continued)

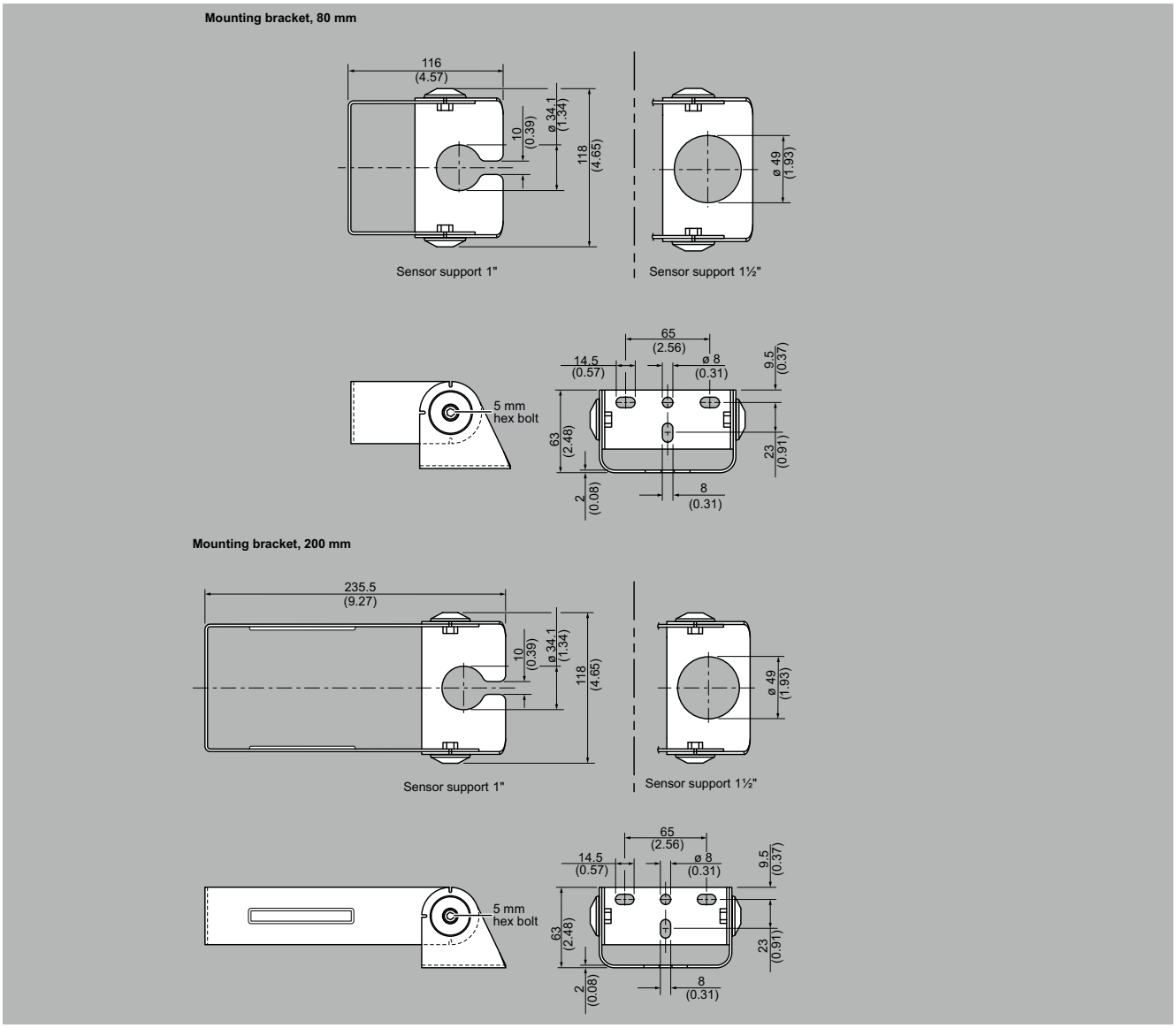

SITRANS LR120 mounting brackets, dimensions in mm (inch)

Circuit diagrams

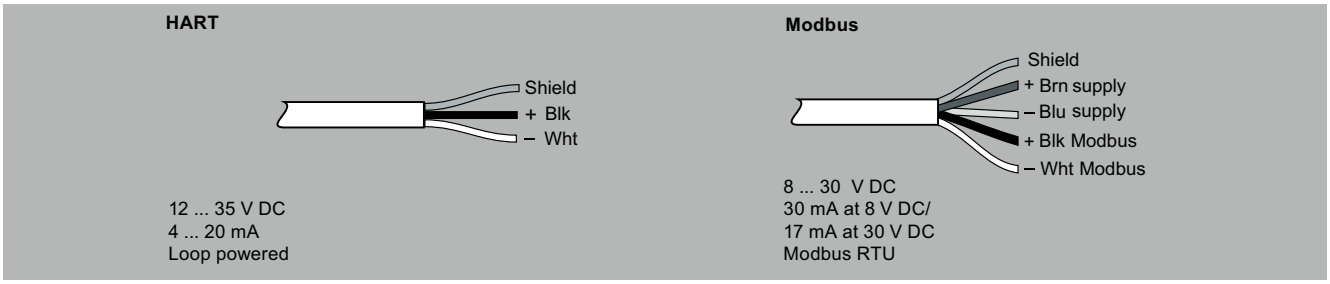

SITRANS LR120 connections