Pressure Measurement

Pressure transmitters

Single-range transmitters for general applications

SITRANS LH100 Transmitter for hydrostatic level

Overview



The pressure transmitter SITRANS LH100 is a submersible sensor for hydrostatic level measurement.

The pressure transmitter measures the liquid levels in tanks, containers, channels and dams. The SITRANS LH100 pressure transmitters are available for various measuring ranges and with explosion protection as an option.

A junction box and a cable hanger are available as accessories for simple installation.

Benefits

- Compact design
- Simple installation
- Small error in measurement (0.3 %)
- Degree of protection IP68

Application

SITRANS LH100 pressure transmitters are used in the following branches, for example:

- Shipbuilding
- Water/waste water supply
- For use in unpressurized/open vessels and wells

Design

The pressure transmitter has a built-in ceramic sensor which is equipped with a Wheatstone resistance bridge.

These pressure transmitters are equipped with an electronic circuit fitted together with the sensor in a stainless steel enclosure. In addition, the connecting cable contains a vent pipe which is equipped with a humidity filter to prevent the build-up of condensation.

The diaphragm is protected against external influences by a protective cap.

The sensor, the electronics and the connecting cable are housed in an enclosure with small dimensions.

The pressure transmitter is temperature-compensated for a wide temperature range.

Function

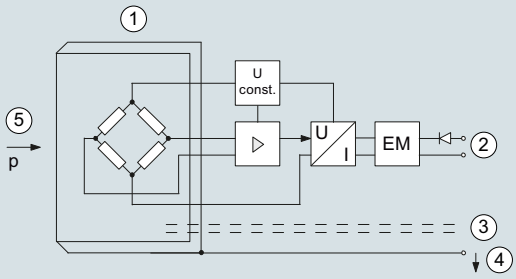

1 Sensor
2 Connection for auxiliary power supply
3 Vent pipe with humidity filter
4 Protective conductor connection/ Equipotential bonding
5 Diaphragm

SITRANS LH100 pressure transmitter, mode of operation and connection diagram

On one side of the sensor (1), the diaphragm (5) is exposed to the hydrostatic pressure which is proportional to the submersion depth. This pressure is compared with atmospheric pressure. Pressure compensation is carried out using the vent pipe (3) in the connecting cable. The vent pipe is equipped with a humidity filter which prevents the build-up of condenstation in the vent pipe.

The hydrostatic pressure of the liquid column acts on the diaphragm of the sensor and transmits the pressure to the Wheatstone resistance bridge in the sensor.

The output voltage of the sensor is applied to the electronic circuit where it is converted into an output current of 4 to 20 mA.

The protective conductor connection/equipotential bonding (4) is connected to the enclosure.

Integration

It is generally recommended that the connecting cable of the SITRANS LH100 transmitter is connected to the cable box, which can be ordered separately, and secured with the anchoring clamp, also available separately. The junction box has to be installed near the measuring point.

If the medium is anything other than water, it is also necessary to check compatibility with the specified materials of the transmitter.

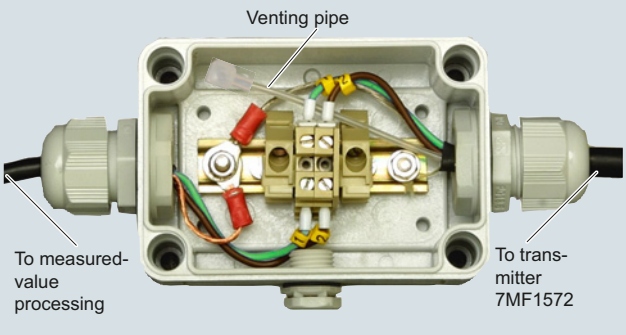

Junction box 7MF1572-8AA, open, schematic diagram

Ovenstraat 29 | 8800 Roeselare | T. +32 (0)51 20 71 41 | www.fluxer.be | sales@fluxer.be



Measuring point setup, generally with junction box 7MF1572-8AA and 7MF1572-8AB cable hanger

Technical specifications

Pressure transmitter SITRANS LH100 (submersible sensor)	
Mode of operation	
Measuring principle	piezo-resistive
Input	
Measured variable	Hydrostatic level
Measuring range	Max. permissible operating pressure
• 0 ... 3 mH_2O (0 ... 9 ftH_2O)	• 1.5 bar (21.8 psi) (corresponds to 15 mH_2O (45 ftH_2O))
• 0 ... 4 mH_2O (0 ... 12 ftH_2O)	• 1.5 bar (21.8 psi) (corresponds to 15 mH_2O (45 ftH_2O))
• 0 ... 5 mH_2O (0 ... 15 ftH_2O)	• 1.5 bar (21.8 psi) (corresponds to 15 mH_2O (45 ftH_2O))
• 0 ... 6 mH_2O (0 ... 18 ftH_2O)	• 1.5 bar (21.8 psi) (corresponds to 15 mH_2O (45 ftH_2O))
• 0 ... 10 mH_2O (0 ... 30 ftH_2O)	• 3.0 bar (43.5 psi) (corresponds to 30 mH2O (90 ftH_2O))
• 0 ... 20 mH_2O (0 ... 60 ftH_2O)	• 5.0 bar (72.5 psi) (corresponds to 50 mH_2O (150 ftH_2O))
• 0 ... 0.3 bar	• 1.5 bar
• 0 ... 0.4 bar	• 1.5 bar
• 0 ... 0.5 bar	• 1.5 bar
• 0 ... 0.6 bar	• 1.5 bar
• 0 ... 1 bar	• 3.0 bar
• 0 ... 2 bar	• 5.0 bar
Output	
Output signal	4 ... 20 mA
Measuring accuracy	According to IEC 60770-1
Error in measurement at limit setting including hysteresis and reproducibility	0.3% of upper range value (typical)
Measuring range	
• 0 ... 3 mH_2O (0 ... 9 ftH_2O bzw. 0 ... 0.3 bar)	0.5 % of upper range value (typical) 1.0% of upper range value (maximum)
• For all other measuring ranges	0.3 % of upper range value (typical) 0.6% of upper range value (maximum)
Influence of ambient temperature	
Measuring range	Zero and span
• 3 mH_2O (9 ftH_2O or 0.3 bar)	0.5 %/10 K of upper range value
• 4 ... 6 mH_2O (12 ... 18 ftH_2O or 0.4…0.6 bar)	0.45 %/10 K of upper range value
• > 6 mH_2O (> 18 ftH_2O or > 0.6 bar)	0.3 %/10 K of upper range value
Long-term stability	
Measuring range	Zero and span
• 3 mH_2O (9 ftH_2O or 0.3 bar)	0.4 % of upper range value/year
• 4 ... 6 mH_2O (12 ... 18 ftH_2O or 0.4…0.6 bar)	0.25% of upper range value/year
• > 6 mH_2O (> 18 ftH_2O or > 0.6 bar)	0.2 % of upper range value/year
Operating conditions	
Ambient conditions	
• Process temperature	-10 ... +80 °C (14 ... 176 °F)
• Storage temperature	-40 ... +80 °C (-40 ... +176 °F)
Degree of protection according to IEC 60529	IP68

SITRANS LH100 Transmitter for hydrostatic level

Design	
Weight	
• Pressure transmitter	≈ 0.2 kg (≈ 0.44 lb)
• Cable; maximum cable length 100 m (330 ft)	0.025 kg/m (≈ 0.015 lb/ft)
Electrical connection	Cable with 3 conductors, vent pipe and integrated humidity filter
Material	
• Seal diaphragm	Al_2O_3 ceramic, 96%
• Enclosure	Stainless steel, mat. no. 1.4404/316L
• Gasket	FPM (standard)
	EPDM (optional)
• Connecting cable	PE-HD (standard)
	PE-LD (in the case of versions with EPDM seal, suitable for drinking water)
Auxiliary power	
Terminal voltage on pressure transmitter U_B	10 ... 33 V DC
	10 ... 30 V DC for transmitter with intrinsic safety explosion protection
Certificates and approvals	
Drinking water approval (ACS)	15 ACC NY 360
EAC	№ TC RU C-DE.ГБ05.B.00732 ОС НАНИО «ЦСВЭ»
Underwriters Laboratories (UL)	2014-11-17 - E344532
The transmitter is not subject to the pressure equipment directive (PED 2014/68/EU)	
Explosion protection	
• Intrinsic safety "i"	IECEx SEV 14.0003 SEV 14 ATEX 0109
- Marking	II 1 G Ex ia IIC T4 Ga
• EAC Ex	TC RU C-DE.AA87.B.00324

Junction box	
Application	for connecting the transmitter cable
Design	
Weight	0.2 kg (0.44 lb)
Electrical connection	2 x 3-way (28 to 18 AWG)
Cable entry	2 x Pg 9
Enclosure material	polycarbonate
Vent valve for atmospheric pressure	
Operating conditions	
Degree of protection according to IEC 60529	IP65
Cable hanger	
Application	for mounting the transmitter
Design	
Weight	0.16 kg (0.35 lb)
Material	Galvanized steel, polyamide

SITRANS LH100 Transmitter for hydrostatic level

Selection and ordering data		Article No.	Order code
Pressure transmitter SITRANS LH100 (submersible sensor)		**7MF1572-**	**A**
For measurement of the hydrostatic level through submersion, two-wire system, 4…20 mA, enclosure material mat. no. 1.4404 (316L), measuring cell Al_2O_3 ceramic, with permanently mounted PE cable			
Measuring range	**Cable length**		
0 ... 3 mH_2O[1]	10 m		**1 C**
0 ... 4 mH_2O	10 m		**1 D**
0 ... 5 mH_2O	10 m		**1 E**
0 ... 6 mH_2O	10 m		**1 F**
0 ... 10 mH_2O	20 m		**1 H**
0 ... 20 mH_2O	30 m		**1 K**
0 ... 9 ftH_2O[1]	33 ft		**2 C**
0 ... 12 ftH_2O	33 ft		**2 D**
0 ... 15 ftH_2O	33 ft		**2 E**
0 ... 18 ftH_2O	33 ft		**2 F**
0 ... 30 ftH_2O	66 ft		**2 H**
0 ... 60 ftH_2O	98 ft		**2 K**
0 ... 0.3 bar[1]	10 m		**3 C**
0 ... 0.4 bar	10 m		**3 D**
0 ... 0.5 bar	10 m		**3 E**
0 ... 0.6 bar	10 m		**3 F**
0 ... 1 bar	20 m		**3 H**
0 ... 2 bar	30 m		**3 K**
Special versions: Measuring ranges for special versions between 0 ... 3 mH_2O and 0 ... 30 mH_2O or 0 ... 9 ftH_2O and 0 ... 100 ftH_2O or 0 ... 0.3 bar and 0 ... 3 bar possible.			**9 A**
Special cable lenght/Special measuring range Please add „-Z" to Article No. and specify Order code and plain text. Note: Indication of measuring range Y01 is always necessary.			**H . . + Y 0 1**
For evaluation of the maximum possible cable length following data have to be regarded: Transmitter: C_i = 0 µF, L_i = 0 µH Cable: C_k = 0.19 nF per meter cable L_k = 1.5 µH per meter cable The maximum permitted data of the transmitter's power supply have to be considered!			
3 m (10 ft)			**H 1 A**
5 m (16 ft)			**H 1 B**
7 m (23 ft)			**H 1 C**
10 m (33 ft)			**H 1 D**
15 m (49 ft)			**H 1 E**
20 m (66 ft)			**H 1 F**
25 m (82 ft)			**H 1 G**
30 m (98 ft)			**H 1 H**
40 m (131 ft)			**H 1 J**
50 m (164 ft)			**H 1 K**
60 m (198 ft)[1]			**H 1 L**
70 m (231 ft)[1]			**H 1 M**
80 m (264 ft)[1]			**H 1 N**
90 m (297 ft)[1]			**H 1 P**
100 m (330 ft)[1]			**H 1 Q**

Selection and ordering data	Article No.	Order code
Pressure transmitter SITRANS LH100 (submersible sensor)	**7MF1572-**	**A**
For measurement of the hydrostatic level through submersion, two-wire system, 4…20 mA, enclosure material mat. no. 1.4404 (316L), measuring cell Al_2O_3 ceramic, with permanently mounted PE cable		
Sealing material between sensor and enclosure		
• FPM (Standard)		**1**
• EPDM (for drinking water applications)		**2**
Explosion protection		
• without		**0**
• With ATEX II1 G Ex ia IIC T4 Ga and IECEx Ex ia IIC T4 Ga		**1**

Additional versions	Order code
Quality test certificate, 5-point factory calibration (IEC 60770-2), add "**-Z**" to article no. and add order code.	**C11**
Indication of measuring range (only at special cable lengths) in "... to ... mH_2O" or "... to ... ftH_2O" or "... to ... bar"	**Y01**

Accessories/spare parts	Article No.
Junction box for connecting the transmitter cable	**7MF1572-8AA**
Cable hanger for securing the pressure transmitter	**7MF1572-8AB**
Protective caps as spare parts (10-pack)	**7MF1572-8AD**
Humidity filters as spare parts (10-pack)	**7MF1572-8AE**

[1] Approvals pending.

Dimensional drawings

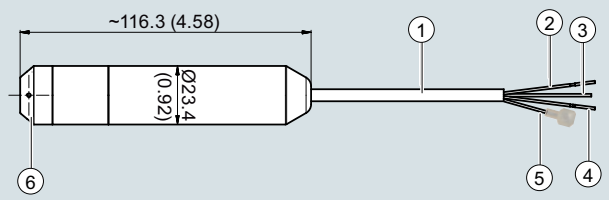

1. Cable, sheat Ø 4.8 (0.19) (black, PE)
2. - (green)
3. + (brown)
4. Protective conductor connection/Equipotential bonding (white)
5. Vent pipe with humidity filter Ø 1 (0.04) (inner diameter)
6. Protective cap with 4 x Ø 2.5 (0.10) holes (black, PPE)

SITRANS LH100 pressure transmitter, dimensions in mm (inch)

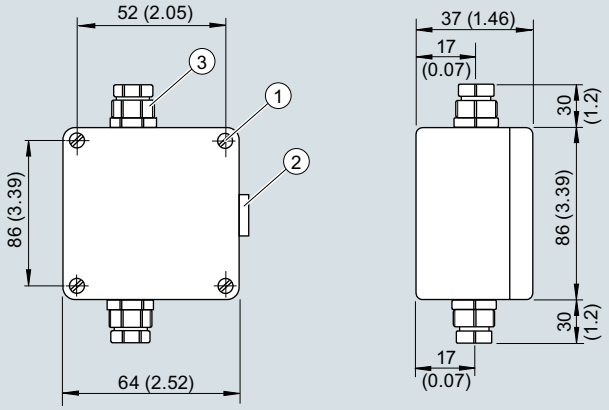

1. Fastening hole
2. Vent valve
3. Cable gland Pg 9, cable diameter 4 ... 8 mm (0.16 ... 0.31)

Junction box, dimensions in mm (inch)

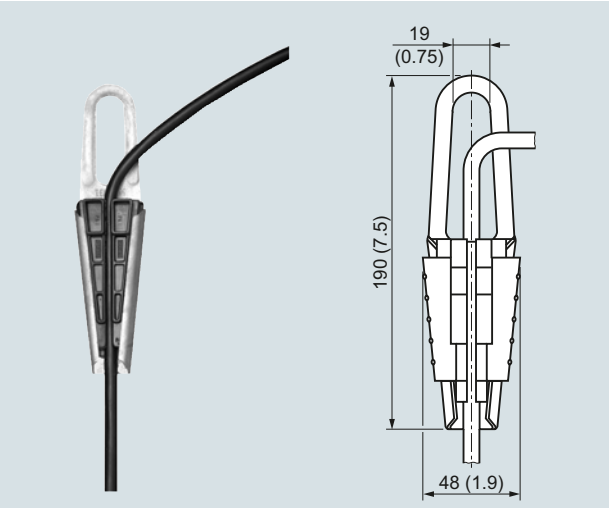

Cable hanger, dimensions in mm (inch)

More information

Establishing the measuring range for water as process medium

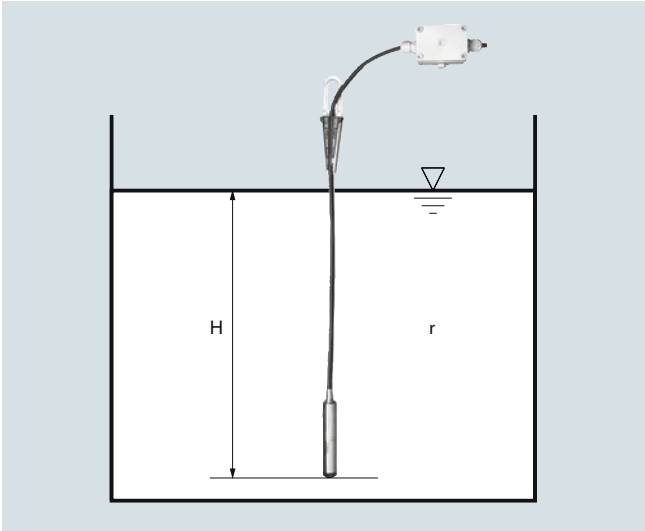

Calculation of the measuring range:

p = ρ x g x H

with:
ρ = density of medium
g = local acceleration due to gravity
H = maximum level

Example:

Medium: Water, ρ = 1 000 kg/m^3
Acceleration due to gravity: 9.81 m/s^2
Lower range value: 0 m
Maximum level: 6.0 m
Cable length: 10 m

Calculation:

p = 1 000 kg/m^3 x 9.81 m/s^2 x 6.0 m
p = 58 860 N/m^2
p = 589 mbar

Transmitter to be ordered:
7MF1572-1FA10
Plus, if required, junction box 7MF1572-8AA and cable hanger 7MF1572-8AB