KM2BSPBRT
KM2BSPMFBRT

TECHNICAL DOCUMENT

FLUXER
FLOOD CONTROL

full port 1/4"-4"
hot forged brass ball valves



Quality:

- 24h 100% seal test guaranteed
- Dual sealing system allows valve to be operated in either direction making installation easier
- No metal-to-metal moving parts
- No maintenance ever required
- Handle clearly shows ball position
- Silicone-free lubricant on all seals
- Chrome plated brass ball for longer life
- Travel stops on body to avoid stresses at stem

Body:

- Hot forged sand blasted, nickel plated brass body and cap sealed with Loctite® or equivalent thread sealant
- Finest brass according to EN 12165 and EN 12164 (formerly DIN 17660 and UNI 5705-65) specifications

Stem:

- Blowout-proof nickel plated brass stem
- Two FPM O-rings at the stem for maximum safety

Seals:

- Pure PTFE self-lubricating seats with flexible-lip design

PED Directives:

- According to 97/23 CE module A: it cannot be used with dangerous gases in sizes larger than 25mm



Threads:

- ISO 228 parallel female by female threads

Flow:

- Full port to DIN 3357 for maximum flow

Handle:

- Geomet® carbon steel handle with thick PVC dip coating. Handle coating offers both thermal and electrical protection
- Handle removable with valve in service

Working Pressure:

- 40 Bar (600 PSI) up to 2", 30 Bar (450 PSI) over 2"
- non-shock cold working pressure

Working Temperature:

- -40°C (-40°F) / +170°C (+350°F) Warning: freezing of the fluid in the installation may severely damage the valve

Options:

- Stem extension
- T-handle
- AISI 430 stainless steel handle
- Patented locking device
- Dezincification resistant brass body and components
- Oval lockable handle up to 2", round over 2"
- Male by Female threads
- Male by male threads

Upon Request:

- AISI 316 stainless steel ball and/or stem
- Glass filled PTFE ball seals
- Custom Design

Approved by or in compliance with:

- Water Regulation Advisor Scheme (United Kingdom)
- GOST-R (Russia)
- Rostekhnadzor (Russia)
- Hygenic (Russia)
- UkrSepro (Ukraine)
- RoHS Compliant

NOTE: Approvals apply to specific configurations only

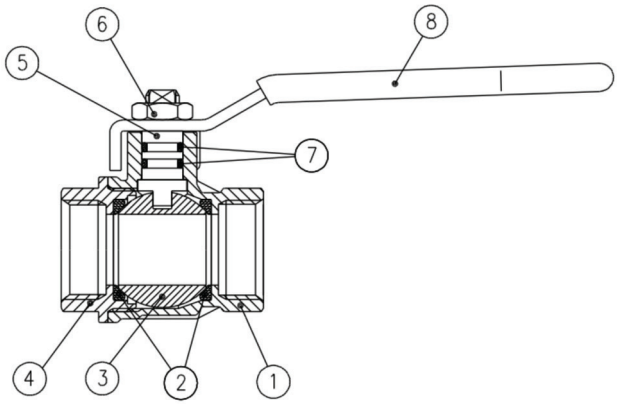

1.1/4"-2" Hollow ball

	Part Description	Q.ty	Material
1	Nickel plated body	1	CW617N
2	Seat	2	PTFE
3	Chrome plated ball	1	CW617N
4	Nickel plated end cap	1	CW617N
5	Nickel plated stem O-ring design	1	CW617N
6	Geomet® nut	1	CB4FF
7	O-Ring	2	FPM
8	Red PVC coated Geomet® steel handle	1	DD11

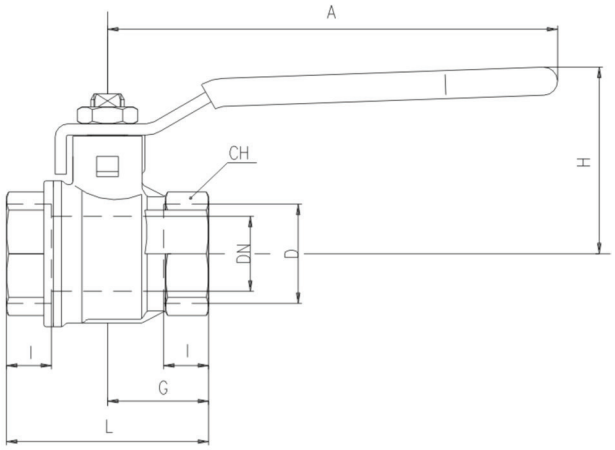

Code	S90B00	S90C00	S90D00	S90E00	S90F00	S90G00	S90H00	S90I00	S90L00	S90M00	S90N00
D (inch)	1/4	3/8	1/2	3/4	1	1 1/4	1 1/2	2	2 1/2	3	4
DN (mm)	8	10	15	20	25	32	40	50	65	80	100
l (mm)	9	9	11	12	14	15	17	19	22	25	29
L (mm)	39	39	50	54	67	77	90	106	136	157	191
G (mm)	19.5	19.5	25	27	33.5	38.5	45	53	68	78.5	95.5
A (mm)	82	82	100	120	120	158	158	158	255	255	255
H (mm)	38	38	43	50	54	73	79	86	132	140	154
CH (mm)	20	20	25	31	38	48	54	66	85	99	125

DN shows the nominal flow diameter. Actual flow diameter complies with full port DIN 3357 part 4. Stem configuration of valves over 2" is slightly different. Ask for details at our Service Center

Ball valves are marked CE on handle from 1.1/4" to 2", on body over 2" as follow: Œ XXCODEXX Cat I-A

Pressure-Temperature Chart

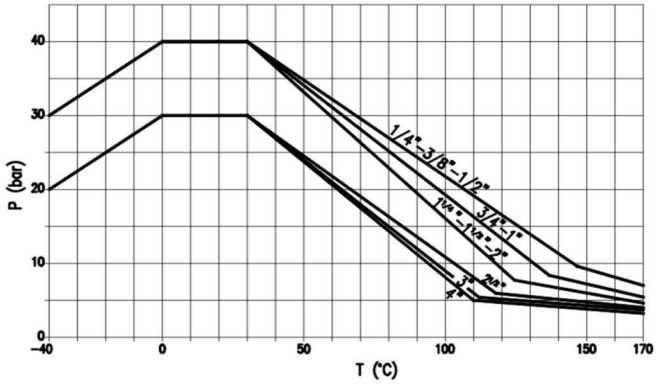

Pressure DropChart

