KL3IBSPBWIIT

3-PIECE MOUNTING PAD FULL PORT BALL VALVE SCREWED-ENDS, PN63, PSI1000



- Thread conform with EN 10226-1, ISO 7-1
- Blow-out proof stem / Full bore
- Mounting Pad For ISO 5211
- Investment casting
- CE PED tested with test report 3.1 EN 10204
- Ts: -40 °C - 120 °C

ITEM	PARTS	MATERIAL
1	plastic cover	plastic
2	handle	SS304
3	positioning bolt	SS304
4	nut	SS304
5	stem nut	SS304
6	gasket	SS304
7	locking washer	SS304
8	stem packing	PTFE
9	seat	PTFE
10	cap	ASTM-A351-CF8M
11	bolt	SS304
12	spring washer	SS304
13	bolt nut	SS304
14	body	SS304
15	ball	SS304
16	stem packing	PTFE
17	stem	ASTM-A351-CF8M
18	gland	SS304

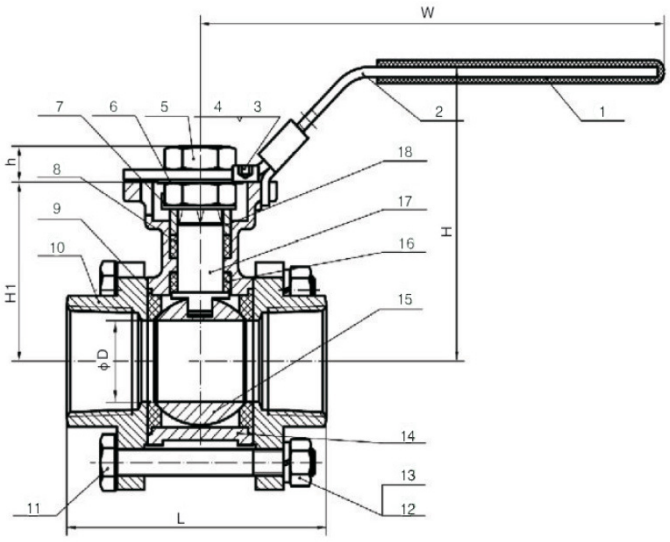

RP	D	H	W	H1	h	ISO 5211		L
			mm					mm
¼"	12.5	72	141	38.5	9	F03	F04	64
⅜"	12.5	72	141	38.5	9	F03	F04	64
½"	15	75	141	42	9	F03	F04	72
¾"	20	81	141	48	9	F03	F04	80
1"	25	93	162	55	11	F04	F05	85
1 ¼"	32	98	162	60	11	F04	F05	105
1 ½"	38	109	188	70	15	F05	F07	113
2"	50	124	188	85	15	F05	F07	132
2 ½"	65	156	233	109	19	F07	F10	170
3"	76	165	233	118	19	F07	F10	186