KG2BSPBRT
KG2BSPMFBRT

TECHNICAL DOCUMENT

FLUXER
FLOOD CONTROL

full port 1/4"- 4"
hot forged brass ball valves



Quality:

- 24h 100% seal test guaranteed
- Dual sealing system allows valve to be operated in either direction making installation easier
- No metal-to-metal moving parts
- No maintenance ever required
- Handle clearly shows ball position
- Silicone-free lubricant on all seals
- Chrome plated brass ball for longer life
- Handle stops on body to avoid stresses at stem

Body:

- Hot forged sand blasted, nickel plated brass body and cap sealed with Loctite® or equivalent thread sealant
- Finest brass according to EN 12165 and EN 12164 (formerly DIN 17660 and UNI 5705-65) specifications

Stem:

- Blowout-proof nickel plated brass stem
- Two FPM O-rings at the stem for maximum safety

Seals:

- Pure PTFE self-lubricating seats with flexible-lip design

PED Directives:

- Assessment according to Pressure Equipment Directive 97/23 CE module B+D by Pascal (1115)



Threads:

- ISO 7/1, BS 21 BSPT Taper Female by Female threads

Flow:

- Full port to DIN 3357 for maximum flow

Handle:

- Geomet® carbon steel handle with thick PVC dip coating. Handle coating offers both thermal and electrical protection

Working Pressure and Working Temperature:

- 40 Bar (600 PSI) up to 2", 30 Bar (450 PSI) over 2"
- non-shock cold working pressure
- -40°C (-40°F) / +170°C (+350°F) temperature
- For use with dangerous fluids temperature rating is –20°C +60°C and pressure rating is 5 bar
- AS4617 Limitations for GAS: 2100 Kpa up to 2" and 1500 Kpa from 2. 1/2" to 4" rated working pressure and 0°C +60°C temperature
- Warning: freezing of the fluid in the installation may severely damage the valve

Options up to 2" size:

- Male by Female threads
- Stem extension
- T-handle
- Oval lockable handle up to 2", round over 2"
- AISI 430 stainless steel handle
- Patented locking device for valves up to 4"

Upon Request:

- AISI 316 stainless steel ball and/or stem
- Glass filled PTFE ball seals
- Custom Design

Approved by or in compliance with:

- The Australian Gas Association (Australia)
- Factory Mutual (United States)
- Water Regulations Advisory Scheme (United Kingdom)
- Suruhanjaya Tenaga (Malaysia)
- GOST-R (Russia)
- Rostekhnadzor (Russia)
- Hygenic (Russia)
- UkrSepro (Ukraine)
- BSI Group
- RoHS Compliant

NOTE: Approvals apply to specific configurations only

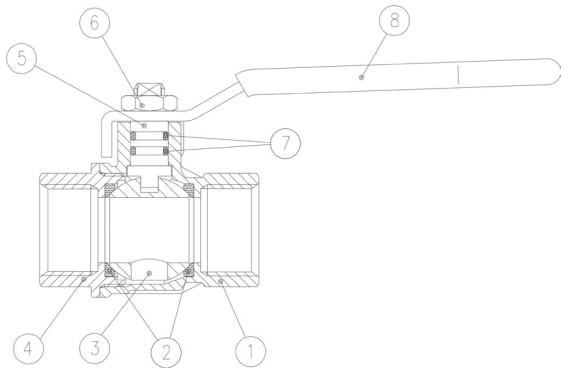

1.1/4"-2" Hollow ball

PART DESCRIPTION		Q.TY	MATERIAL
1	Nickel plated body	1	CW617N
2	Seat	2	PTFE
3	Chrome plated ball	1	CW617N
4	Nickel plated end cap	1	CW617N
5	Nickel plated stem O-ring design	1	CW617N
6	Geomet® nut	1	CB4FF
7	O-Ring	2	FPM
8	Yellow PVC coated geomet® steel handle	1	DD11

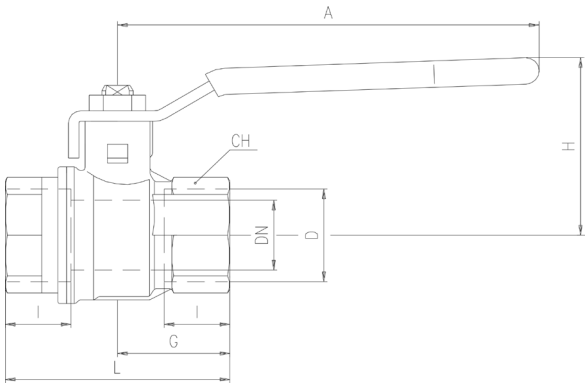

Code	S84B50	S84C50	S84D50	S84E50	S84F50	S84G50	S84H50	S84I50	S84L50	S84M50	S84N50
D (inch)	1/4	3/8	1/2	3/4	1	1 1/4	1 1/2	2	2 1/2	3	4
DN (mm)	8	10	15	20	25	32	40	50	65	80	100
I (mm)	12	12	15.5	17	21	23	23	26.5	32	35	41.5
L (mm)	45	45	59	64	81	93	102	121	156	177	216
G (mm)	22.5	22.5	29.5	32	40.5	46.5	51	60.5	78	88.5	108
A (mm)	82	82	100	120	120	158	158	158	255	255	255
H (mm)	38	38	43	50	54	73	79	86	132	140	154
CH (mm)	20	20	25	31	40	49	54	68.5	85	99	125

DN shows the nominal flow diameter. Actual flow diameter complies with full port DIN 3357 part 4. Stem configuration of valves over 2" is slightly different. Ask for details at our Service Center

Ball valves are marked CE on handle from 1.1/4" to 2", on body over 2" as follow: Œ 1115 cat IIIB+D PS: 5 GAS TS1: -20°C TS2: +60°C

Pressure-Temperature Chart

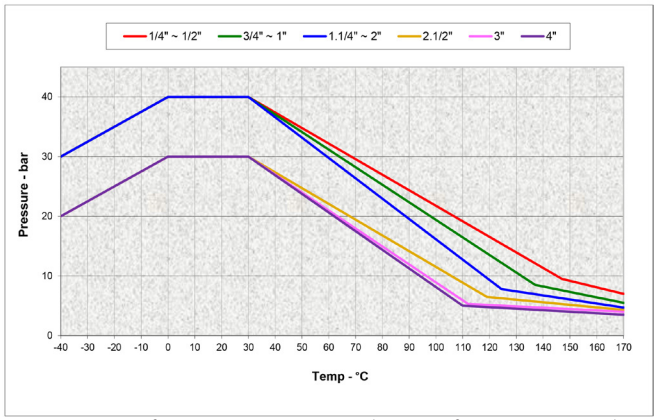

AS4617 Limitations for GAS: 2100 Kpa up to 2" and 1500 Kpa from 2. 1/2" to 4" rated working pressure and 0°C +60°C temperature

Pressure Drop Chart

