Flow Measurement

SITRANS FX (Vortex)

SITRANS FX330

Overview



SITRANS FX Vortex flowmeter are designed for use in industrial applications and optimally suited to the demands in auxiliary supply systems.

The proven principle of vortex flowmeters is suitable for measurement of liquids, gases and vapors unaffected by conductivity, viscosity, temperature and pressure.

Benefits

- Integrated pressure and temperature compensation
- Temperature compensation for saturated steam included as standard
- High measuring accuracy
- Maintenance-free sensor
- Non-wearing, fully welded stainless steel construction with high resistance to corrosion, pressure and temperature
- SIL2 certified according to IEC 61508 Edition 2
- Use in hazardous areas
- Integrated reduction of nominal diameter for space-saving and economic installation and large measuring ranges
- Redundant data management: Easy exchange of electronics without loss of calibration and configuration data
- FAD (Free Air Delivery) functionality
- Gross and net heat calculation to support advanced energy management
- Remote version with cable length up to 50 m (164 ft)

Even the basic version of the vortex flowmeter SITRANS FX330 is equipped with temperature compensation for saturated steam applications. With the optional pressure sensor the SITRANS FX330 has integrated density compensation for calculation of corrected volume and mass (online density compensation). The density compensation for calculation of corrected volume and mass is based on the standards of NIST for gases and IAPWS for steam.

Higher measuring accuracy with the use of compact measuring systems

With the classic installation of a vortex flowmeter and separate pressure and temperature sensor as well as flow calculator, all errors occurring in the measuring chain must be taken into account when determining system accuracy. This can result in a measuring error between ± 3 to 5 %.

Using a vortex flowmeter with integrated pressure and temperature compensation such as the SITRANS FX330 allows you not only to lower installation costs but also increase the measuring accuracy of the measuring point. In this case the accuracy is ± 1.5 % of the measured value.

Benefits (continued)

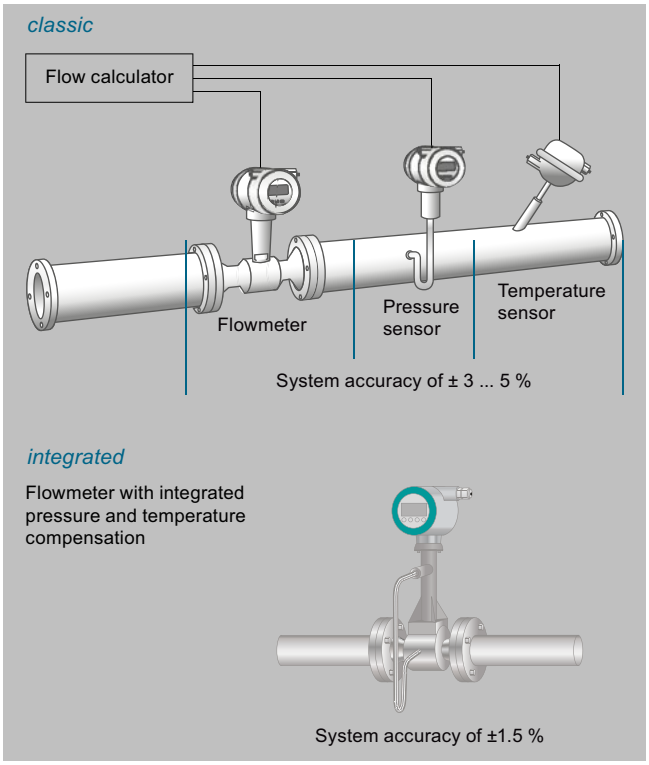

The SITRANS FX330 in flange design is available with integrated reduction of nominal diameter for space-saving installations and large measuring spans. About 90% of all vortex flowmeters are ordered one size smaller than the line diameter in order to increase the flow speed and to get a wider measuring range. Here, the line has to be reduced before and widened after the sensor, typically including 20x DN inlet and 5x DN outlet run. With the reduction and widening of nominal diameter included in the sensor, it is no longer necessary. To compensate the non-existent straight inlet run between reduction and the vortex bluff body, these devices are specially calibrated and linearized.

A new feature of the SITRANS FX330 is the advanced signal processing and filtering called AVFD (Advanced Vortex Frequency Detection): Interferences and disturbances in the measuring signal are suppressed, signals outside from the relevant frequency band are filtered out.

Redundant data management prevents loss of calibration and configuration data when changing electronics or display.

By default, all SITRANS FX330 meters are factory-calibrated (traceable to international standards) and pre-set according to customer specifications. The SITRANS FX330 also comes with an installation wizard to ease installation; e.g. in a steam application it will only show related settings.

Developed according to the standard IEC 61508 edition 2, the SITRANS FX330 can be used in safety-related application with classification SIL2 for continuous volume flow measurement.

Application

- Measurement of saturated steam and superheated steam
- Steam boiler monitoring
- Heat metering of steam and hot water
- Measurement of consumption of industrial gases
- Measurement of consumption in compressed air systems
- Monitoring of compressor output
- Evaluation of Free Air Delivery (FAD)
- SIP and CIP processes in the food, beverage and pharmaceutical industries
- Measuring of conductive and non-conductive liquids
- Safety-related measurement in SIL applications (SIL2)

Gross and net heat quantity calculation

The SITRANS FX330 was designed for applications in auxiliary and supply service lines, such as internal monitoring of energy flows for saturated and superheated steam or hot water. Equipped with temperature sensor as standard, the device can be installed as heat meter in the feed line directly connected with an external temperature sensor in the return line. The gross and net heat calculation can be fed into a DCS to support advanced energy management.

When it comes to energy, the most accurate measurement of consumption is essential. By combining flow, temperature and pressure measurements in one device, SITRANS FX330 provides the basis for a precise mass flow calculation.

In steam applications, the software even determines the enthalpy - the heat content - of the steam. Therefore, SITRANS FX330 is able to calculate the gross heat quantity.

In case net heat quantity consumption of process is asked for, a single temperature sensor can be added to the return line. SITRANS FX330 uses the readings to calculate the amount of heat consumed.

The SITRANS FX330 thereby proves itself to be a reliable partner.

Application (continued)

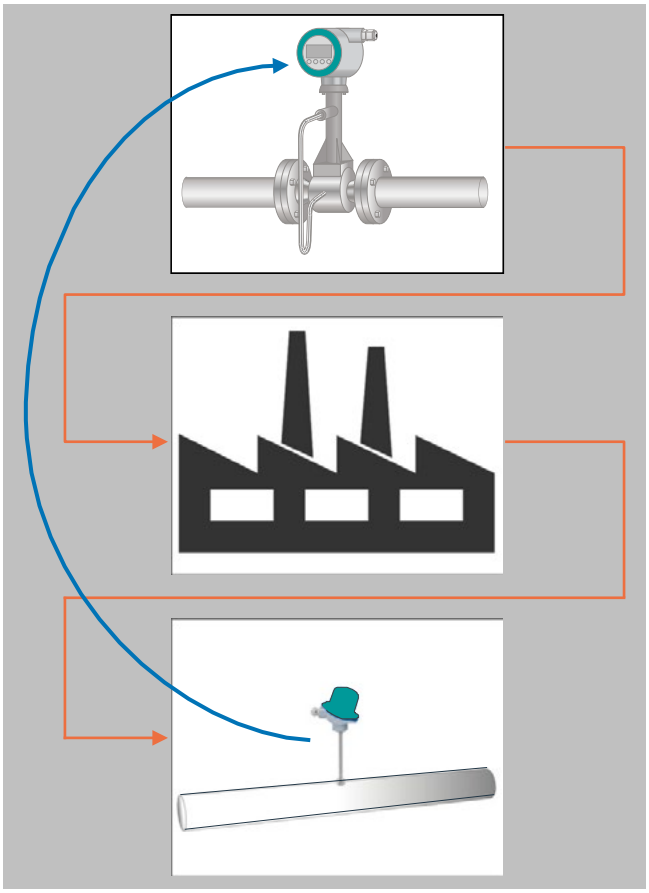

Design

SITRANS FX330 Flange	SITRANS FX330 Sandwich
	
Flange version with integrated temperature compensation as standard for saturated steam and optional pressure compensation for superheated steam, gases and wet gases	All advantages of the flange version in a space-saving sandwich design; centering rings guarantee an easy installation without any offset
Integrated reduction of nominal diameter for space-saving and economic installations plus large measuring ranges	Integrated reduction of nominal diameter not available
Also in remote design with field housing and connection cable up to 50 m (164 ft)	Also in remote design with field housing and connection cable up to 50 m (164 ft)
With shut off valve allowing • exchange and calibration of pressure sensor • pressure and leak testing of pipeline without interrupting the process	With shut off valve allowing • exchange and calibration of pressure sensor • pressure and leak testing of pipeline without interrupting the process

Function

Vortex flowmeters are used to measure the flow of gases, vapors and liquids in completely filled pipes. The measuring principle is based on the principle of the Karman vortex street. Inside the measuring sensor vortices are shed from a bluff body and are detected by a sensor located behind. The frequency **f** of the vortex shedding is proportional to the flow velocity **v**.

The nondimensional Strouhal number **S** describes the relationshipbetween vortex frequency **f,** width **b** of the bluff body and the mean flow velocity **v**:

$$f = (S \cdot v) / b$$

The vortex frequency is recorded at the sensor and evaluated at the converter.

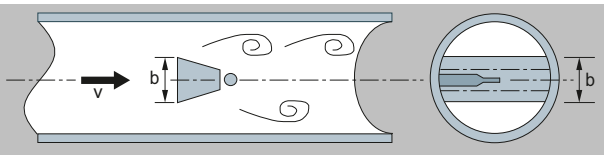

Functional principle

Configuration

Available combinations of sensors and connection size for SITRANS FX330 in flanged design

SITRANS FX330 Flanged (7ME2610-...)										
Sensor size	Connection size	EN 1092-1, Form B1/B-2, PN 10	EN 1092-1, Form B1/B-2, PN 16	EN 1092-1, Form B1/B-2, PN 25	EN 1092-1, Form B1/B-2, PN 40	EN 1092-1, Form B1/B-2, PN 63	EN 1092-1, Form B1/B-2, PN 100	ANSI B16.5, class 150	ANSI B16.5, class 300	ANSI B16.5, class 600
DN 15	DN 15	-	-	-	X	-	X	X	X	X
	DN 25	-	-	-	X	-	X	X	X	X
	DN 40	-	-	-	X	-	X	X	X	X
DN 25	DN 25	-	-	-	X	-	X	X	X	X
	DN 40	-	-	-	X	-	X	X	X	X
	DN 50	-	X	-	X	X	X	X	X	X
DN 40	DN 40	-	-	-	X	-	X	X	X	X
	DN 50	-	X	-	X	X	X	X	X	X
	DN 80	-	X	-	X	X	X	X	X	X
DN 50	DN 50	-	X	-	X	X	X	X	X	X
	DN 80	-	X	-	X	X	X	X	X	X
	DN 100	-	X	-	X	X	X	X	X	X
DN 80	DN 80	-	X	-	X	X	X	X	X	X
	DN 100	-	X	-	X	X	X	X	X	X
	DN 150	-	X	-	X	X	X	X	X	X
DN 100	DN 100	-	X	-	X	X	X	X	X	X
	DN 150	-	X	-	X	X	X	X	X	X
	DN 200	X	X	X	X	-	-	X	X	-
DN 150	DN 150	-	X	-	X	X	X	X	X	X
	DN 200	X	X	X	X	-	-	X	X	-
	DN 250	X	X	X	X	-	-	X	X	-
DN 200	DN 200	X	X	X	X	-	-	X	X	-
	DN 250	X	X	X	X	-	-	X	X	-
	DN 300	X	X	X	X	-	-	X	X	-
DN 250	DN 250	X	X	X	X	-	-	X	X	-
	DN 300	X	X	X	X	-	-	X	X	-
DN 300	DN 300	X	X	X	X	-	-	X	X	-

X = available
- = not available

Selection and ordering data

SITRANS FX330 Flanged Not approved for SIL2 safety applications Approved for SIL2 safety applications		Article No. 7ME2610- 7ME2611-									
		●	●	●	●	●	-	●	●	●	●
Click on the Article No. for the online configuration in the PIA Life Cycle Portal.											
Sensor size	**Connection size**										
DN 15 (½")	DN 15 (½")	1	A								
	DN 25 (1")	1	B								
	DN 40 (1½")	1	C								
DN 25 (1")	DN 25 (1")	2	B								
	DN 40 (1½")	2	C								
	DN 50 (2")	2	D								
DN 40 (1½")	DN 40 (1½")	2	K								
	DN 50 (2")	2	L								
	DN 80 (3")	2	M								
DN 50 (2")	DN 50 (2")	2	R								
	DN 80 (3")	2	S								
	DN 100 (4")	2	T								
DN 80 (3")	DN 80 (3")	3	L								
	DN 100 (4")	3	M								
	DN 150 (6")	3	R								
DN 100 (4")	DN 100 (4")	3	S								
	DN 150 (6")	3	T								
	DN 200 (8")	3	Q								
DN 150 (6")	DN 150 (6")	4	M								
	DN 200 (8")	4	P								
	DN 250 (10")	4	Q								
DN 200 (8")	DN 200 (8")	4	T								
	DN 250 (10")	4	U								
	DN 300 (12")	4	V								
DN 250 (10")	DN 250 (10")	4	W								
	DN 300 (12")	4	Y								
DN 300 (12")	DN 300 (12")	5	E								
Process connection and pressure rate											
EN 1092-1 type B1											
PN 10	DN 200 ... 300			A							
PN 16	DN 50 ... 300			B							
PN 25	DN 200 ... 300			C							
PN 40	DN 15 ... 300			D							
PN 63	DN 50 ... 150			E							
PN 100	DN 15 ... 150			F							
ANSI B16.5 RF											
Class 150	½ ... 12"			J							
Class 300	½ ... 12"			K							
Class 600	½ ... 6"			L							
System design											
Compact version	No cable				0						
Remote version	Cable length with order code L..				1						
Transmitter housing											
Aluminum						0					
Aluminum, silicon free						1					
Stainless steel						2					
Stainless steel (remote version)						3					
Dual version, aluminum						6					
Dual version, aluminum, silicon free						7					
Communication											
HART								0			
PROFIBUS PA								1			
FOUNDATION Fieldbus								2			

Selection and ordering data (continued)

SITRANS FX330 Flanged Not approved for SIL2 safety applications Approved for SIL2 safety applications	Article No. 7ME2610- 7ME2611-									
	●	●	●	●	●	-	●	●	●	●
Ex approval										
Without Ex approval								A		
ATEX II2 G Ex ia								B		
ATEX II2 G Ex d								C		
ATEX II3 G Ex nA								D		
ATEX II2 D Ex tb								E		
QPS IS Class I Div.1								F		
QPS XP Class I Div.1								G		
QPS NI Class I Div. 2								H		
QPS DIP Class I, III Div. 1								J		
IECEx II2 G Ex ia								K		
IECEx II2 G Ex d								L		
IECEx II3 G Ex nA								M		
IECEx II2 D Ex tb								N		
EAC Ex i (On Hold)								R		
EAC Ex d (On Hold)								S		
EAC Ex nA (On Hold)								T		
EAC Ex t (On Hold)								U		
Pressure sensor and gasket material										
Without pressure sensor								A		
With pressure sensor and gasket material FPM (Viton), Range:										
1 bar (14.5 psi)								B		
2 bar (29 psi)								C		
4 bar (58 psi)								D		
6 bar (87 psi)								E		
10 bar (145 psi)								F		
16 bar (232 psi)								G		
25 bar (363 psi)								H		
40 bar (580 psi)								J		
60 bar (870 psi)								K		
100 bar (1450 psi)								L		
With pressure sensor and gasket material FFKM (Kalrez), Range:										
1 bar (14.5 psi)								M		
2 bar (29 psi)								N		
4 bar (58 psi)								P		
6 bar (87 psi)								Q		
10 bar (145 psi)								R		
16 bar (232 psi)								S		
25 bar (363 psi)								T		
40 bar (580 psi)								U		
60 bar (870 psi)								V		
100 bar (1450 psi)								W		
Software version										
Standard - Uncompensated for gases, steam and liquids including temperature compensation for saturated steam										0
Standard + Heat meter for saturated steam and water										1
Density compensation for steam + Heat meter for saturated and superheated steam										2
Density compensation for gases, wet gases and mixed gases + FAD										3

Selection and ordering data (continued)

SITRANS FX330 Sandwich Not approved for SIL2 safety applications Approved for SIL2 safety applications		Article No. 7ME2710- 7ME2711-										
		●	●	●	●	●	-	●	●	●	●	
Click on the Article No. for the online configuration in the PIA Life Cycle Portal.												
Sensor size												
DN 15 (½")		1	A									
DN 25 (1")		2	B									
DN 40 (1½")		2	K									
DN 50 (2")		2	R									
DN 80 (3")		3	L									
DN 100 (4")		3	S									
Pressure rating												
EN 1092-1												
PN 16	DN 15 ... 100			B								
PN 25	DN 15 ... 100			C								
PN 40	DN 15 ... 100			D								
PN 63	DN 15 ... 100			E								
PN 100	DN 15 ... 100			F								
ANSI B16.5												
Class 150	½ ... 4"			J								
Class 300	½ ... 4"			K								
Class 600	½ ... 4"			L								
System design												
Compact version	No cable				0							
Remote version	Cable length with Order code L..				1							
Transmitter housing												
Aluminum						0						
Aluminum, silicon free						1						
Communication												
HART								0				
PROFIBUS PA								1				
FOUNDATION Fieldbus								2				
Ex approval												
Without Ex approval									A			
ATEX II2 G Ex ia									B			
ATEX II2 G Ex d									C			
ATEX II3 G Ex nA									D			
ATEX II2 D Ex tb									E			
QPS IS Class I Div.1									F			
QPS XP Class I Div.1									G			
QPS NI Class I Div. 2									H			
QPS DIP Class I, III Div. 1									J			
IECEx II2 G Ex ia									K			
IECEx II2 G Ex d									L			
IECEx II3 G Ex nA									M			
IECEx II2 D Ex tb									N			
EAC Ex i (On Hold)									R			
EAC Ex d (On Hold)									S			
EAC Ex nA (On Hold)									T			
EAC Ex t (On Hold)									U			
Pressure sensor and gasket material												
Without pressure sensor										A		
With pressure sensor and gasket material FPM (Viton), Range:												
1 bar (14.5 psi)										B		
2 bar (29 psi)										C		
4 bar (58 psi)										D		
6 bar (87 psi)										E		
10 bar (145 psi)										F		
16 bar (232 psi)										G		

Selection and ordering data (continued)

SITRANS FX330 Sandwich Not approved for SIL2 safety applications Approved for SIL2 safety applications	Article No. 7ME2710- 7ME2711-									
	●	●	●	●	●	-	●	●	●	●
25 bar (363 psi)									H	
40 bar (580 psi)									J	
60 bar (870 psi)									K	
100 bar (1450 psi)									L	
With pressure sensor and gasket material FFKM (Kalrez), Range:										
1 bar (14.5 psi)									M	
2 bar (29 psi)									N	
4 bar (58 psi)									P	
6 bar (87 psi)									Q	
10 bar (145 psi)									R	
16 bar (232 psi)									S	
25 bar (363 psi)									T	
40 bar (580 psi)									U	
60 bar (870 psi)									V	
100 bar (1450 psi)									W	
Software version										
Standard - Uncompensated for gases, steam and liquids including temperature compensation for saturated steam										0
Standard + Heat meter for saturated steam and water										1
Density compensation for steam + Heat meter for saturated and superheated steam										2
Density compensation for gases, wet gases and mixed gases + FAD										3

	Order code
Additional information Please add "**-Z**" to Article No. and specify as minimum Order code Y40, Y41, Y42, Y43, Y44 and Y45 in plain text.	
Application data	
Medium: Specify medium (liquid, gas, steam or customer-specific)	**Y40**
Temperature: Specify operating temperature with unit	**Y41**
Pressure: Specify operating pressure with unit	**Y42**
Density: Specify density with unit	**Y43**
Viscosity: Specify viscosity with unit	**Y44**
Flow rate: Specify max. flow rate with unit	**Y45**

Operating instruction

All literature is available to download for free, in a range of languages, at www.siemens.com/processinstrumentation/documentation

	Order code
Further designs Please add "**-Z**" to Article No. and specify Order code.	
Cable connection	
Without cable glands	**A01**
M20 × 1.5 cable glands (3 cable entries) in plastic, grey	**A02**
M20 × 1.5 cable glands (3 cable entries) in plastic, blue	**A03**
M20 × 1.5 cable glands (3 cable entries) made of brass, Ex-d/t/nA	**A04**
M20 × 1.5 cable glands (3 cable entries) made of stainless steel, Ex-d/t/nA	**A06**
1/2" NPT conduit connection in stainless steel (3 cable entries, cable glands not included)	**A07**
M20 × 1.5 cable glands (2 cable entries - 1 plugged) in plastic, grey	**A12**
M20 × 1.5 cable glands (2 cable entries - 1 plugged) in plastic, blue	**A13**

Selection and ordering data (continued)

	Order code
M20 × 1.5 cable glands (2 cable entries - 1 plugged) made of brass, Ex-d/t/nA	**A14**
M20 × 1.5 cable glands (2 cable entries - 1 plugged) made of stainless steel, Ex-d/t/nA	**A16**
1/2" NPT conduit connection in stainless steel (2 cable entries - 1 plugged, cable glands not included)	**A17**
M20 × 1.5 cable glands (1 cable entry - 2 plugged) in plastic, grey	**A22**
M20 × 1.5 cable glands (1 cable entry - 2 plugged) in plastic, blue	**A23**
M20 × 1.5 cable glands (1 cable entry - 2 plugged) made of brass, Ex-d/t/nA	**A24**
M20 × 1.5 cable glands (1 cable entry - 2 plugged) made of stainless steel, Ex-d/t/nA	**A26**
1/2" NPT conduit connection in stainless steel (3 cable entries, cable glands not included)	**A27**
M20x1.5 cable glands (3 cable entries) made of brass, Ex-d/t/nA approved for Dual Version	**A34**
M20x1.5 cable glands (3 cable entries) made of Stainless steel, Ex-d/t approved for Dual Version	**A36**
1/2" NPT conduit connection in stainless steel (3 cable entries, cable glands not included) for Dual Version	**A37**
M20x1.5 cable glands (2 cable entries - 1 plugged) made of brass, Ex-d/t/nA approved for Dual Version	**A44**
M20x1.5 cable glands (2 cable entries - 1 plugged) made of Stainless steel, Ex-d/t approved for Dual Version	**A46**
1/2" NPT conduit connection in stainless steel (2 cable entries - 1 plugged, cable glands not included) for Dual Version	**A47**
1/2" NPT conduit connection in stainless steel (2 cable entries - 1 plugged, cable glands not included) for Dual Version	**A54**
M20x1.5 cable glands (1 cable entry - 2 plugged) made of brass, Ex-d/t/nA approved for Dual Version	**A56**
1/2" NPT conduit connection in stainless steel (1 cable entry - 2 plugged, cable glands not included) for Dual Version	**A57**
Isolation valve	
With isolation valve	**B10**
Language	
English	**B11**
Chinese	**B12**
Russian	**B13**
Certificates	
Certificate of compliance according to EN 10204-2.1	**C10**
Pressure test + Inspection certificate according to EN 10204-3.1	**C11**
Material certification of pressure bearing metal parts according to EN 10204-3.1	**C12**
Material in accordance with NACE MR0175/ISO 15156	**C13**
PMI of pressure bearing metal parts + Inspection certificate according to EN 10204-3.1	**C14**
Material certificate of pressure bearing metal parts according to EN 10204-3.1 + PMI	**C15**
Dye penetration test of wetted welds	**C16**
X-ray test on pressurized weld DN 15 – 80 acc. to EN	**C17**
X-ray test on pressurized weld DN 100 – 300 acc. to EN	**C18**
Dye pen test on pressurized welds acc. to ASME	**C19**
X-ray test on press. welds DN 15 – 80 acc. to ASME	**C20**
X-ray test on press. welds DN 100 - 300 acc. to ASME	**C21**

Selection and ordering data (continued)

	Order code
Calibration	
5-point calibration with certificate	**D11**
General approval	
World (CE) except: EAC, KCC, UKCA, CRN	**E00**
EAC (On Hold)	**E07**
UKCA (In Preparation)	**E13**
KC	**E20**
CRN	**E70**
Cleaning	
Final cleaning for standard applications incl. certificate 2.1	**K50**
Final cleaning for standard applications incl. certificate 3.1	**K51**
Final oil & grease free cleaning for oxygen applications incl. certificate 2.1	**K52**
Final oil & grease free cleaning for oxygen applications incl. certificate 3.1	**K53**
Cable length for remote design	
5 m (16 ft)	**L01**
10 m (32 ft)	**L02**
15 m (49 ft)	**L03**
20 m (65 ft)	**L04**
25 m (82 ft)	**L05**
30 m (98 ft)	**L06**
35 m (114 ft)	**L07**
40 m (131 ft)	**L08**
45 m (147 ft)	**L09**
50 m (164 ft)	**L10**
5 m (16 ft) UV resistant	**L31**
10 m (32 ft) UV resistant	**L32**
15 m (49 ft) UV resistant	**L33**
20 m (65 ft) UV resistant	**L34**
25 m (82 ft) UV resistant	**L35**
30 m (98 ft) UV resistant	**L36**
35 m (114 ft) UV resistant	**L37**
40 m (131 ft) UV resistant	**L38**
45 m (147 ft) UV resistant	**L39**
50 m (164 ft) UV resistant	**L40**
Tag name plate	
TAG name plate in stainless steel 40 × 20 mm (Add plain text)	**Y17**
TAG name plate in stainless steel tag 120 × 46 mm (Add plain text)	**Y18**

SITRANS FX330 spare parts

Description	Article No.
Transmitter electronic for SITRANS FX330	
• FXT030 in compact design with HART (non-Ex/Ex-i)	**KRH-16000100**
• FXT030 in compact design with HART (Ex-d)	**A5E38663398**
Display with HMI and data memory	**A5E38663613**
Seal disc 21.8 × 12 × 0.1	**KRH-17000700**
O-ring pickup	**KRH-17001400**
O-ring for pressure screw 17.13 × 2.62, FPM 70	**KRH-17001200**
Cover gasket O-ring	**KRH-16000300**
Front Cover (non Ex)	**KRH-16002000**

Selection and ordering data (continued)

Description	Article No.
Front Cover (Ex)	KRH-16002500
Back Cover	KRH-16003000
Converter housing gasket, 59,35,5-2-N	KRH-16000400
O-ring	
• 20 × 1, FPM (DIN 3771)	KRH-17001100
• 10 × 2, NBR	KRH-17001000
DUBOX plug 5 pole, linear, RM2	KRH-17000800
Cable feed through 10 pole (non Ex)	KRH-16000500
Shut-off valve	KRH-17004000
Centering rings for Sandwich-Version	
• DN 15	KRH-17006000
• DN 25	KRH-17006001
• DN 40	KRH-17006002
• DN 50	KRH-17006003
• DN 50 (300 lbs, 600 lbs)	KRH-17006004
• DN 50 (JIS 10K, 16K, 20K)	KRH-17006005
• DN 80	KRH-17006006
• DN 100	KRH-17006007
Wall housing incl. Neck (incl. Screws, Gaskets and cable glands)	KRH-16112002
Sensor replacement kit including seal disc, socket, pickup and O-rings (for pickup and pressure screw)[1)]	
• DN 15	KRH-16111100
• DN 25	KRH-16111150
• DN 40	KRH-16111200
• DN 50	KRH-16111210
• DN 80	KRH-16111220
• DN 100	KRH-16111230
• DN 150 ... 300	KRH-16111300
Pressure sensor replacement kit including pressure sensor with calibration certificate, DUBOX plug and O-rings[1)]	
• 1 bar	KRH-16111350
• 2 bar	KRH-16111370
• 4 bar	KRH-16111400
• 6 bar	KRH-16111401
• 10 bar	KRH-16111402
• 16 bar	KRH-16111403
• 25 bar	KRH-16111404
• 40 bar	KRH-16111405
• 60 bar	KRH-16111406
• 100 bar	KRH-16111407
Upgrade Kit SITRANS FX300 (requires serial number of device to be replaced)	On request

1) Pick-up resp. pressure sensor replacement kits are delivered with replacement instructions. Please note that in case of pick-up or pressure sensor replacement the factory pressure test gets invalid and has to be repeated with test pressure PTmax indicated on the type plate.

SITRANS FX330 Flow Straightener	Article No. 7ME2900-									●	●	●	0	0
Click on the Article No. for the online configuration in the PIA Life Cycle Portal.														
Material														
Stainless steel 1.4404 (316L)										1				

Selection and ordering data (continued)

SITRANS FX330 Flow Straightener	Article No. 7ME2900-	●	●	●	0	0
Nominal size						
DN 15 / ANSI ½"			A			
DN 25 / ANSI 1"			B			
DN 40 / ANSI 1½"			C			
DN 50 / ANSI 2"			D			
DN 80 / ANSI 3"			E			
DN 100 / ANSI 4"			F			
DN 150 / ANSI 6"			G			
DN 200 / ANSI 8"			H			
DN 250 / ANSI 10"			J			
DN 300 / ANSI 12"			K			
Pressure rating						
PN 10				A		
PN 16				B		
PN 25				C		
PN 40				D		
PN 63				E		
PN 100				F		
Class 150				J		
Class 300				K		
Class 600				L		

	Order code
Additional information Please add "**-Z**" to Article No. and specify Order code.	
Certificates	
Certificate of compliance to EN 10204-2.1	**C10**
Material certification of pressure bearing parts to EN 10204-3.1	**C12**
Material in accordance with NACE MR0175/ISO 15156	**C13**
PMI of pressure bearing parts + Inspection certificate according to EN 10204-3.1	**C14**
Material certificate of pressure bearing parts according to EN 10204-3.1 + PMI	**C15**
Cleaning	
Free of oil and grease (wetted parts)	**K46**
Free of oil and grease (wetted parts) + Inspection certificate according to EN 10204-3.1	**K48**

Technical specifications

SITRANS FX330		
Range of application	Flow measurement of liquids, gases and vapors	
Mode of operation		
Measuring principle	Karman vortex street	
Primary measured value	• Volume flow • Mass flow • Corrected volume flow • Density • Temperature • Pressure • Heat energy	
Design		
Transmitter		
• Compact and remote version	Cable length up to 50 m (164 ft)	
Sensor	Flange version	Sandwich version
• Integrated temperature measurement	Yes	Yes
• Reduction of nominal diameter	Yes	No
• Pressure and temperature compensation	Yes	Yes
• Isolation valve	Yes	Yes
• Dual measuring device	Yes	No
Display	4-line graphical display (backlit) with control keys	
Operation	• Via local display (languages: German, English, French, Italian, Spanish, Swedish, Danish, Czech, Polish, Russian, Chinese, Turkish, Slovenian) • Via SIMATIC PDM	
Accuracy		
Volume flow		
• Liquids		
- Re ≥ 20 000	± 0.75 % of measured value	
- 10 000 < Re < 20 000	± 2.0 % of measured value	
• Gases and vapors		
- Re ≥ 20 000	± 1.0 % of measured value	
- 10 000 < Re < 20 000	± 2.0 % of measured value	
Mass flow/Corrected volume flow		
• Gases and vapors		
- Re ≥ 20 000	± 1.5 % of measured value	
- 10 000 < Re < 20 000	± 2.5 % of measured value	
Mass flow		
• Liquid/water		
- Re ≥ 20 000	± 1.5 % of measured value	
- 10 000 < Re < 20 000	± 2.5 % of measured value	
Repeatability (Volume flow)	± 0.1 % of measured value	
Operating conditions		
Temperature ratings		
• Medium	-40 ... +240 °C (-40 ... +465 °F)	
• Ambient		
- Non-Ex	-40 ... +85 °C (-40 ... +185 °F)	
- Ex	-40 ... +65 °C (-40 ... +140 °F)	
• Storage	-40 ... +85 °C (-40 ... +185 °F)	
Pressure ratings	Max. 100 bar (1450 psi), higher pressure rates on request	
Max. allowable test pressure		

Technical specifications (continued)

SITRANS FX330	
• With integrated pressure sensor and isolation valve (closed)	1.5 x PN
• With integrated pressure sensor and without isolation valve	2 times the measuring range of pressure sensor
Process medium	
• Density	Taken into consideration when sizing
• Viscosity	< 10 cP
• Reynold's number	> 10000
Recommended flow velocities	
• Liquids	0.3 ... 7 m/s (0.98 ... 23 ft/s)
• Gases and vapors	2.0 ... 80 m/s (6.6 ... 262.5 ft/s)
- DN 15	3.0 ... 45 m/s (9.8 ... 148 ft/s)
- DN 25	2.0 ... 70 m/s (6.6 ... 230 ft/s)
	For detailed information see operating instructions "Intended use"
Installation conditions	
Inlet run	
• For undisturbed flow profile, after pipe section with reducer, after 1 x 90° pipe bend	≥ 15 x DN
• After 2 x 90° pipe bend	≥ 30 x DN
• After 2 x 90° three-dimensional pipe bend	≥ 40 x DN
• After control valves	≥ 50 x DN
• Before flow conditioner	≥ 2 x DN
• After flow conditioner	≥ 8 x DN
Outlet run	≥ 5 x DN
Material	
Sensor and process connections	
• Standard	1.4404/316L
• Option	Hastelloy C22 on request
Transmitter housing	Aluminum
• Standard	Aluminum die-cast, two-layer coating (epoxy/polyester)
• Option	Die-cast aluminum with finish for advanced requirements / 1.4409 / 316L / A 351-CF3M
Pressure sensor gasket	
• Standard	FPM
• Option	FFKM
Sensor gasket (Pick-up)	
• Standard	1.4535/316L
• Option	Hastelloy C276
Process connections	
DIN EN 1092-1	DN 15 ... 300 / PN 16 ... 100
ANSI B16.5	½" ... 12"/150 ... 600 lb
	For valid combinations of connection size and pressure rating see table in section "Configuration"
Enclosure rating	
Standard	Compact and remote version: IP66/IP67
Option	Remote version: IP66/IP68 for sensor
Power supply	
Non-Ex version	14 ... 36 V DC
Ex version	14 ... 30 V DC
Inputs/Outputs	
Current output	4 ... 20 mA, HART
Binary output	Pulse/Frequency/Status/Limit switch
Current input	4 ... 20 mA, passive

Technical specifications (continued)

SITRANS FX330	
Communication	HART 7 PROFIBUS PA FOUNDATION Fieldbus
Calibration	
Standard calibration	3-point calibration: 3 x 15 %, 3 x 50 %, 3 x 80 %
Special calibration	5-point calibration: 3 x 15 %, 3 x 30 %, 3 x 50 %, 3 x 60 %, 3 x 80 %
Certificates and approvals	
Ex approvals	ATEX, QPS, IECEx
CE declaration of conformity	PED 2014/68/EU EMC 2014/30/EU
Safety integration level (SIL)	SIL2 according to IEC 61508

Dimensional drawings

Compact version

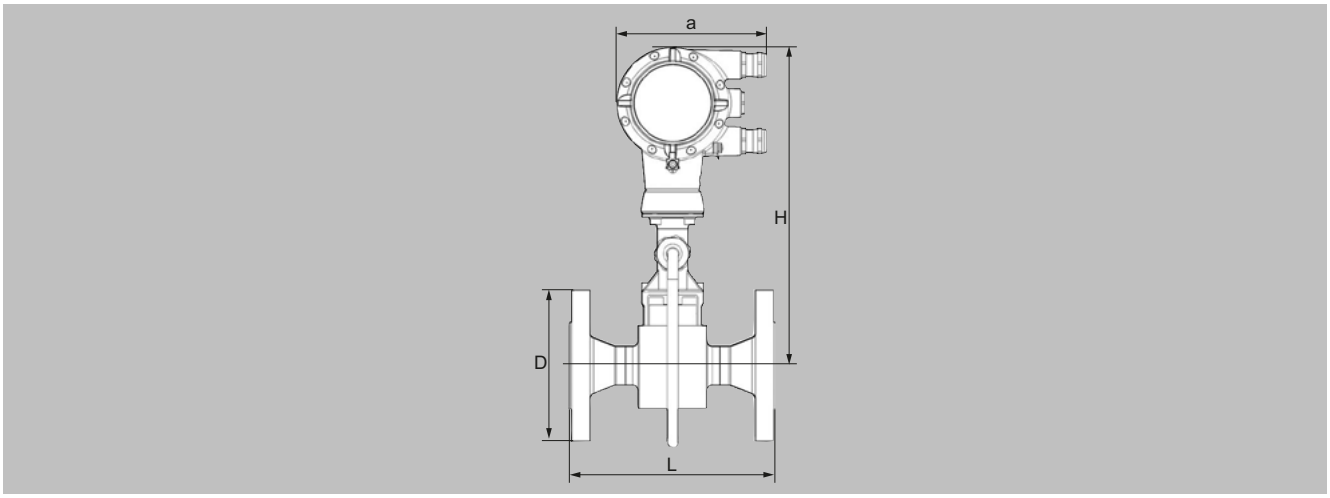

SITRANS FX330 (Vortex), Flanged version with pressure sensor, front view

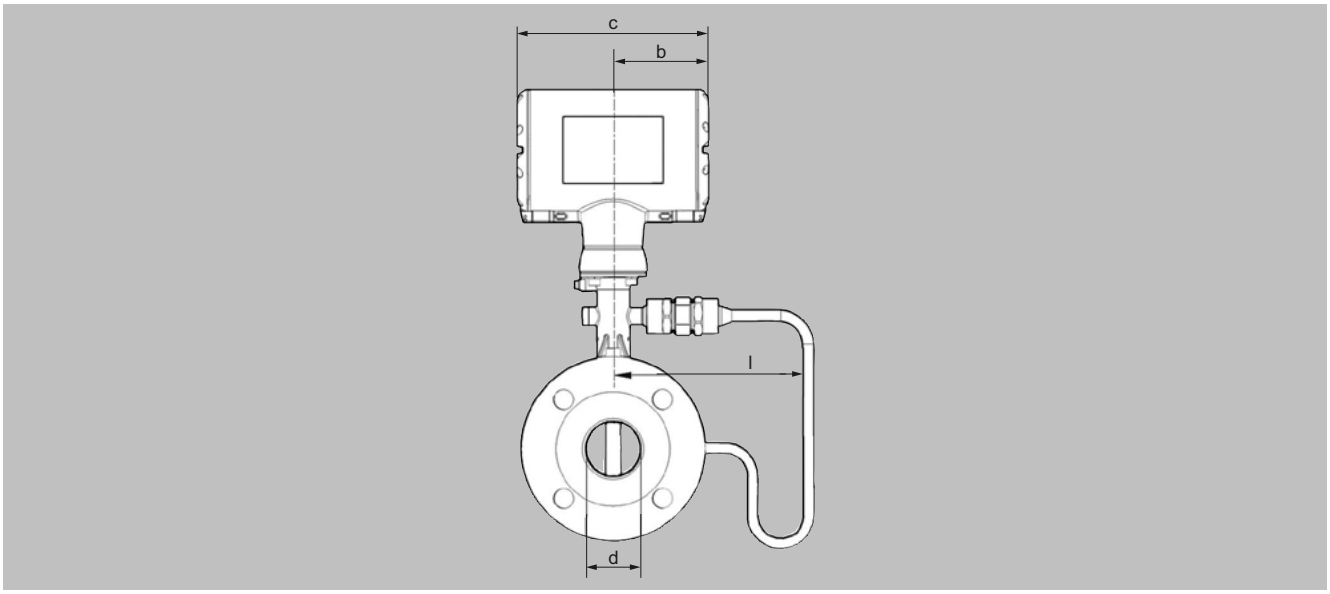

SITRANS FX330 (Vortex), Flanged version with pressure sensor, side view

Flange version EN 1092-1

Size	Pressure rating	Dimensions [mm (inch)] a = 148.5 (5.85), b = 85.8 (3.38), c = 171.5 (6.76)							Weight [kg (lb)]	
DN	PN	d	d FR[1)]	d FR[2)]	D	L	H	l	Flowmeter (without pressure sensor)	Flowmeter (with pressure sensor)
15	40	17.3 (0.68)	-	-	95 (3.74)	200 (7.87)	358.8 (14.2)	169.3 (6.67)	5.5 (12.13)	6.1 (13.45)
15	100	17.3 (0.68)	-	-	105 (4.13)	200 (7.87)	358.8 (14.2)	169.3 (6.67)	6.5 (14.33)	7.1 (15.65)
25	40	28.5 (1.12)	17.3 (0.68)	-	115 (4.53)	200 (7.87)	358.4 (14.1)	169.3 (6.67)	7.3 (16.09)	7.9 (17.42)
25	100	28.5 (1.12)	17.3 (0.68)	-	140 (5.51)	200 (7.87)	358.4 (14.1)	169.3 (6.67)	9.3 (20.50)	9.9 (21.83)
40	40	43.1 (1.70)	28.5 (1.12)	17.3 (0.68)	150 (5.91)	200 (7.87)	362.3 (14.3)	169.5 (6.67)	10.2 (22.49)	10.8 (23.81)
40	100	42.5 (1.67)	28.5 (1.12)	17.3 (0.68)	170 (6.69)	200 (7.87)	362.3 (14.3)	169.5 (6.67)	14.2 (31.31)	14.8 (32.63)

Dimensional drawings (continued)

Size	Pressure rating	Dimensions [mm (inch)] a = 148.5 (5.85), b = 85.8 (3.38), c = 171.5 (6.76)							Weight [kg (lb)]	
DN	PN	d	d FR[1)]	d FR[2)]	D	L	H	I	Flowmeter (without pressure sensor)	Flowmeter (with pressure sensor)
50	16	54.5 (2.15)	42.5 (1.67)	28.5 (1.12)	165 (6.50)	200 (7.87)	368.3 (14.5)	169.3 (6.67)	12.1 (26.68)	12.7 (28.00)
50	40	54.5 (2.15)	42.5 (1.67)	28.5 (1.12)	165 (6.50)	200 (7.87)	368.3 (14.5)	169.3 (6.67)	12.3 (27.12)	12.9 (28.44)
50	63	54.5 (2.15)	42.5 (1.67)	28.5 (1.12)	180 (7.09)	200 (7.87)	368.3 (14.5)	169.3 (6.67)	16.3 (35.94)	16.9 (37.26)
50	100	53.9 (2.12)	42.5 (1.67)	28.5 (1.12)	195 (7.68)	200 (7.87)	368.3 (14.5)	169.3 (6.67)	17.8 (39.24)	18.4 (40.57)
80	16	82.5 (3.25)	54.5 (2.15)	42.5 (1.67)	200 (7.87)	200 (7.87)	380.3 (15.0)	169.3 (6.67)	16.8 (37.04)	17.4 (38.36)
80	40	82.5 (3.25)	54.5 (2.15)	42.5 (1.67)	200 (7.87)	200 (7.87)	380.3 (15.0)	169.3 (6.67)	18.8 (41.45)	19.4 (42.77)
80	63	81.7 (3.22)	54.5 (2.15)	42.5 (1.67)	215 (8.46)	200 (7.87)	380.3 (15.0)	169.3 (6.67)	22.8 (50.27)	23.4 (51.59)
80	100	80.9 (3.19)	54.5 (2.15)	42.5 (1.67)	230 (9.06)	200 (7.87)	380.3 (15.0)	169.3 (6.67)	26.8 (59.08)	27.4 (60.41)
100	16	107 (4.21)	80.9 (3.19)	54.5 (2.15)	220 (8.66)	250 (9.84)	396.8 (15.7)	171.5 (6.75)	21.4 (47.18)	22 (48.50)
100	40	107 (4.21)	80.9 (3.19)	54.5 (2.15)	235 (9.25)	250 (9.84)	396.8 (15.7)	171.5 (6.75)	24.4 (53.79)	25 (55.12)
100	63	106 (4.17)	80.9 (3.19)	54.5 (2.15)	250 (9.84)	250 (9.84)	396.8 (15.7)	171.5 (6.75)	29.4 (64.82)	30 (66.14)
100	100	104 (4.09)	80.9 (3.19)	54.5 (2.15)	265 (10.43)	250 (9.84)	396.8 (15.7)	171.5 (6.75)	35.4 (78.04)	36 (79.37)
150	16	159 (6.26)	107 (4.21)	80.9 (3.19)	285 (11.22)	300 (11.81)	416.3 (16.4)	191.5 (7.54)	35.2 (77.60)	35.8 (78.93)
150	40	159 (6.26)	107 (4.21)	80.9 (3.19)	300 (11.81)	300 (11.81)	416.3 (16.4)	191.5 (7.54)	41.2 (90.83)	41.8 (92.15)
150	63	157 (6.18)	107 (4.21)	80.9 (3.19)	345 (13.58)	300 (11.81)	416.3 (16.4)	191.5 (7.54)	59.2 (130.51)	59.8 (131.84)
150	100	154 (6.06)	107 (4.21)	80.9 (3.19)	355 (13.98)	300 (11.81)	416.3 (16.4)	191.5 (7.54)	67.2 (148.15)	67.8 (149.47)
200	10	207 (8.15)	159 (6.26)	107 (4.21)	340 (13.39)	300 (11.81)	442.1 (17.4)	202.8 (7.98)	37.8 (83.33)	38.4 (84.66)
200	16	207 (8.15)	159 (6.26)	107 (4.21)	340 (13.39)	300 (11.81)	442.1 (17.4)	202.8 (7.98)	37.8 (83.33)	38.4 (84.66)
200	25	207 (8.15)	159 (6.26)	107 (4.21)	360 (14.17)	300 (11.81)	442.1 (17.4)	202.8 (7.98)	46.8 (103.18)	47.4 (104.50)
200	40	207 (8.15)	159 (6.26)	107 (4.21)	375 (14.76)	300 (11.81)	442.1 (17.4)	202.8 (7.98)	54.8 (120.81)	55.4 (122.14)
250	10	260 (10.24)	207 (8.15)	159.3 (6.27)	395 (15.55)	380 (14.96)	468.8 (18.5)	229.5 (9.04)	57.4 (126.55)	58.0 (127.87)
250	16	260 (10.24)	207 (8.15)	159.3 (6.27)	405 (15.94)	380 (14.96)	468.8 (18.5)	229.5 (9.04)	58.4 (128.75)	59.0 (130.07)
250	25	259 (10.20)	207 (8.15)	159.3 (6.27)	425 (16.73)	380 (14.96)	468.8 (18.5)	229.5 (9.04)	74.4 (164.02)	75.0 (165.35)
250	40	259 (10.20)	207 (8.15)	159.3 (6.27)	450 (17.72)	380 (14.96)	468.8 (18.5)	229.5 (9.04)	92.4 (203.71)	93.0 (205.03)
300	10	310 (12.20)	260 (10.24)	207 (8.15)	445 (17.52)	450 (17.72)	492.8 (19.4)	255 (10.04)	75.7 (166.89)	76.3 (168.21)
300	16	310 (12.20)	260 (10.24)	207 (8.15)	460 (18.11)	450 (17.72)	492.8 (19.4)	255 (10.04)	82.2 (181.22)	82.8 (182.54)
300	25	308 (12.13)	260 (10.24)	207 (8.15)	485 (19.09)	450 (17.72)	492.8 (19.4)	255 (10.04)	98.7 (217.60)	99.3 (218.92)
300	40	308 (12.13)	260 (10.24)	207 (8.15)	515 (20.28)	450 (17.72)	492.8 (19.4)	255 (10.04)	127.5 (281.09)	128.1 (282.41)

1) FR - single reduction
2) F2R - double reduction

Flange version ANSI B16.5

Size	Pressure rating	Dimensions [mm (inch)] a = 148.5 (5.85), b = 85.8 (3.38), c = 171.5 (6.76)							Weight [kg (lb)]	
DN	Class	d	d FR[1)]	d FR[2)]	D	L	H	I	Flowmeter (without pressure sensor)	Flowmeter (with pressure sensor)
½	150	16 (0.63)	-	-	90 (3.5)	200 (7.9)	358.8 (14.2)	169.3 (6.67)	4.5 (9.92)	5.1 (11.24)
½	300	16 (0.63)	-	-	95 (3.7)	200 (7.9)	358.8 (14.2)	169.3 (6.67)	4.9 (10.80)	5.5 (12.13)
½	600	14 (0.55)	-	-	95 (3.7)	200 (7.9)	358.8 (14.2)	169.3 (6.67)	5.1 (11.24)	5.7 (12.57)
1	150	27 (1.1)	15.8 (0.62)	-	110 (4.3)	200 (7.9)	358.4 (14.1)	169.3 (6.67)	6.2 (13.67)	6.8 (14.99)
1	300	27 (1.1)	15.8 (0.62)	-	125 (4.9)	200 (7.9)	358.4 (14.1)	169.3 (6.67)	7.2 (15.87)	7.8 (17.20)
1	600	24 (1.0)	15.8 (0.62)	-	125 (4.9)	200 (7.9)	358.4 (14.1)	169.3 (6.67)	7.5 (16.53)	8.1 (17.86)
1½	150	41 (1.6)	26.6 (1.1)	15.8 (0.6)	125 (4.9)	200 (7.9)	362.3 (14.3)	169.5 (6.67)	8.3 (18.30)	8.9 (19.62)
1½	300	41 (1.6)	26.6 (1.1)	15.8 (0.6)	155 (6.1)	200 (7.9)	362.3 (14.3)	169.5 (6.67)	10.4 (22.93)	11 (24.25)
1½	600	38 (1.5)	26.6 (1.1)	15.8 (0.6)	155 (6.1)	200 (7.9)	362.3 (14.3)	169.5 (6.67)	11.4 (25.13)	12 (26.46)
2	150	53 (2.1)	40.9 (1.6)	26.6 (1.1)	150 (5.9)	200 (7.9)	368.3 (14.5)	169.5 (6.67)	11 (24.25)	11.6 (25.57)
2	300	53 (2.1)	40.9 (1.6)	26.6 (1.1)	165 (6.5)	200 (7.9)	368.3 (14.5)	169.5 (6.67)	12.4 (27.34)	13 (28.66)
2	600	49 (1.9)	40.9 (1.6)	26.6 (1.1)	165 (6.5)	200 (7.9)	368.3 (14.5)	169.5 (6.67)	13.9 (30.64)	14.5 (31.97)
3	150	78 (3.1)	52.6 (2.1)	40.9 (1.6)	190 (7.5)	200 (7.9)	380.3 (15.0)	169.3 (6.67)	19.8 (43.65)	20.4 (44.97)
3	300	78 (3.1)	52.6 (2.1)	40.9 (1.6)	210 (8.3)	200 (7.9)	380.3 (15.0)	169.3 (6.67)	22.8 (50.27)	23.4 (51.59)
3	600	74 (2.9)	52.6 (2.1)	40.9 (1.6)	210 (8.3)	200 (7.9)	380.3 (15.0)	169.3 (6.67)	23.8 (52.47)	24.4 (53.79)
4	150	102 (4.0)	78 (3.1)	52.6 (2.1)	230 (9.1)	250 (9.8)	396.8 (15.7)	171.5 (6.76)	23.4 (51.59)	24 (52.91)
4	300	102 (4.0)	78 (3.1)	52.6 (2.1)	255 (10)	250 (9.8)	396.8 (15.7)	171.5 (6.76)	31.4 (69.23)	32 (70.55)
4	600	97 (3.8)	78 (3.1)	52.6 (2.1)	275 (11)	250 (9.8)	396.8 (15.7)	171.5 (6.76)	40.4 (89.07)	41 (90.39)

Dimensional drawings (continued)

Size	Pressure rating	Dimensions [mm (inch)] a = 148.5 (5.85), b = 85.8 (3.38), c = 171.5 (6.76)							Weight [kg (lb)]	
DN	Class	d	d FR[1)]	d FR[2)]	D	L	H	l	Flowmeter (without pressure sensor)	Flowmeter (with pressure sensor)
6	150	154 (6.1)	102 (4.0)	78.0 (3.1)	280 (11)	300 (12)	416.3 (16.4)	191.5 (7.54)	36.2 (79.81)	36.8 (81.13)
6	300	154 (6.1)	102 (4.0)	78.0 (3.1)	320 (13)	300 (12)	416.3 (16.4)	191.5 (7.54)	51.2 (112.88)	51.8 (114.20)
6	600	146 (5.8)	102 (4.0)	78.0 (3.1)	355 (14)	300 (12)	416.3 (16.4)	191.5 (7.54)	76.2 (167.99)	76.8 (169.31)
8	150	203 (8.0)	154 (6.1)	102 (4.0)	345 (14)	300 (12)	442.1 (17.4)	202.8 (8.0)	50.0 (110.23)	50.6 (111.55)
8	300	203 (8.0)	154 (6.1)	102 (4.0)	380 (15)	300 (12)	442.1 (17.4)	202.8 (8.0)	74.8 (164.91)	75.4 (166.23)
10	150	255 (10.0)	203 (8.0)	154 (6.1)	405 (16)	380 (15)	468.8 (18.5)	229.5 (9.04)	74.4 (164.02)	75.0 (165.35)
10	300	255 (10.0)	203 (8.0)	154 (6.1)	455 (18)	380 (15)	468.8 (18.5)	229.5 (9.04)	106.4 (234.57)	107.0 (235.89)
12	150	305 (12.0)	255 (10.0)	203 (8.0)	485 (19)	450 (18)	492.8 (19.4)	255 (10.0)	106.4 (234.35)	107.0 (235.67)
12	300	305 (12.0)	255 (10.0)	203 (8.0)	520 (21)	450 (18)	492.8 (19.4)	255 (10.0)	151.4 (333.56)	152.0 (334.88)

1) FR - single reduction
2) F2R - double reduction

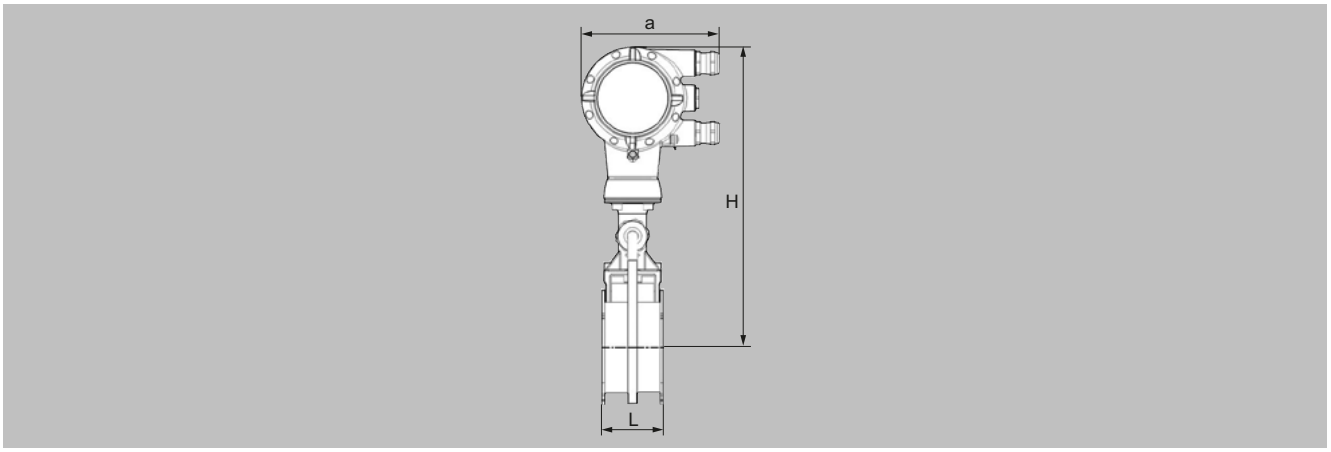

SITRANS FX330 (Vortex), Sandwich version with pressure sensor, front view

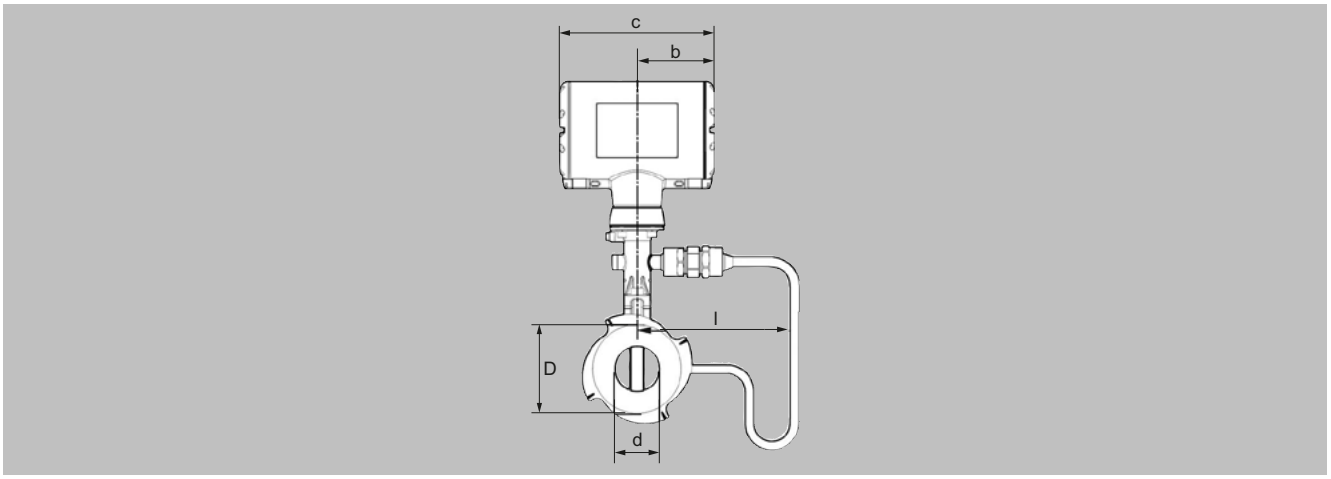

SITRANS FX330 (Vortex), Sandwich version with pressure sensor, side view

Dimensional drawings (continued)

Sandwich version EN

Size	Pressure rating	Dimensions [mm (inch)]								Weight [kg (lb)]	
DN	PN	a	b	c	d	D	L	H	l	Flowmeter (without pressure sensor)	Flowmeter (with pressure sensor)
15	16 ... 100	133 (5.24)	105 (4.13)	179 (7.05)	16 (0.63)	45 (1.77)	65 (2.56)	265 (10.43)	174.25 (6.86)	3.5 (7.72)	4.1 (9.04)
25	16 ... 100	133 (5.24)	105 (4.13)	179 (7.05)	24 (0.94)	65 (2.56)	65 (2.56)	265 (10.43)	174.25 (6.86)	4.3 (9.48)	4.9 (10.80)
40	16 ... 100	133 (5.24)	105 (4.13)	179 (7.05)	38 (1.50)	82 (3.23)	65 (2.56)	270 (10.63)	174.5 (6.87)	4.9 (10.80)	5.5 (12.13)
50	16 ... 100	133 (5.24)	105 (4.13)	179 (7.05)	50 (1.97)	102 (4.02)	65 (2.56)	275 (10.83)	174.5 (6.87)	6 (13.23)	6.6 (14.55)
80	16 ... 100	133 (5.24)	105 (4.13)	179 (7.05)	74 (2.91)	135 (5.31)	65 (2.56)	290 (11.42)	174.25 (6.86)	8.2 (18.08)	8.8 (19.40)
100	16 ... 100	133 (5.24)	105 (4.13)	179 (7.05)	97 (3.82)	158 (6.22)	65 (2.56)	310 (12.20)	176.5 (6.95)	9.5 (20.94)	10.1 (22.27)

Sandwich version ANSI

Size	Pressure rating	Dimensions [inch]								Weight [lb]	
DN	Class	a	b	c	d	D	L	H	l	Flowmeter (without pressure sensor)	Flowmeter (with pressure sensor)
½"	150, 300	5.32	4.26	7.25	0.63	1.77	2.56	10.43	6.82	7.72	9.04
½"	600	5.32	4.26	7.25	0.55	1.77	2.56	10.43	6.82	7.72	9.04
1"	150, 300, 600	5.32	4.26	7.25	0.94	2.56	2.56	10.43	6.82	9.48	10.80
1½"	150, 300, 600	5.32	4.26	7.25	1.50	3.23	2.56	10.63	6.82	10.80	12.13
2"	150, 300, 600	5.32	4.26	7.25	1.97	4.02	2.56	10.83	6.82	13.23	14.55
3"	150, 300, 600	5.32	4.26	7.25	2.91	5.31	2.56	11.42	6.82	18.08	19.40
4"	150, 300, 600	5.32	4.26	7.25	3.82	6.22	2.56	12.20	6.82	20.94	22.27

Remote version

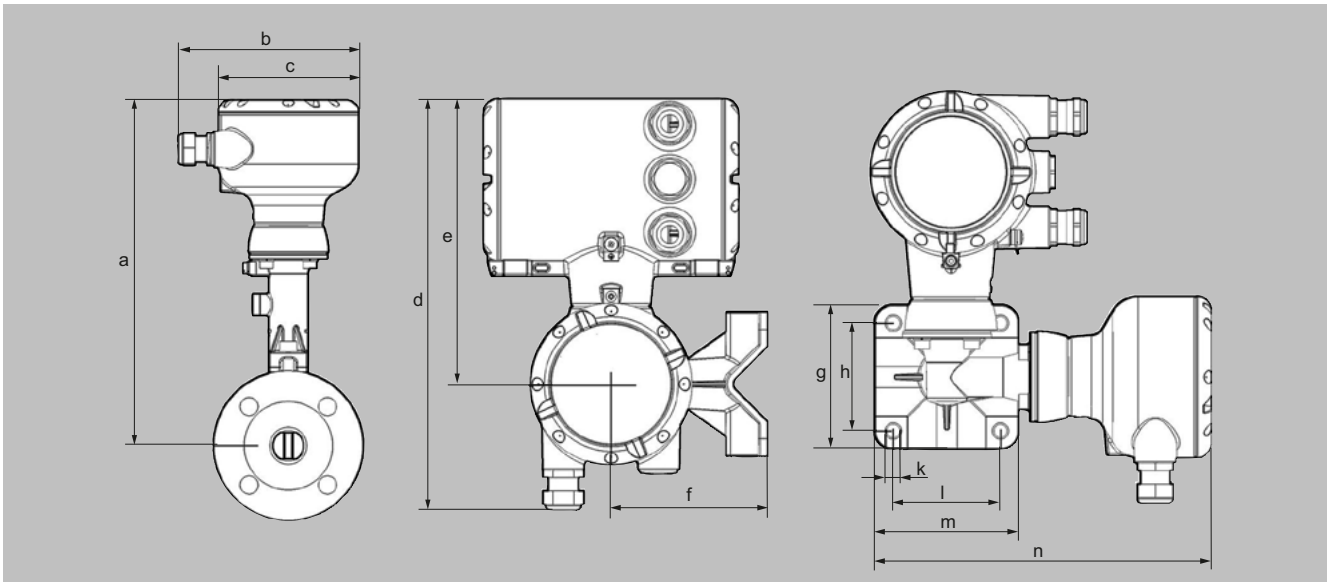

SITRANS FX330 (Vortex), Remote version

Dimension a

	Flanged and Sandwich version						Flanged version			
DN	15 (½")	25 (1")	40 (1½")	50 (2")	80 (3")	100 (4")	150 (6")	200 (8")	250 (10")	300 (12")
[mm]	265.7	265.2	269.2	275.2	287.2	303.7	323.2	348.9	375.7	399.7
[inch]	10.5	10.4	10.6	10.8	11.3	12.0	12.7	13.7	14.8	15.7

Dimensional drawings (continued)

Dimension a F1/2R

	Flanged version									
DN	**15 (½")**	**25 (1")**	**40 (1½")**	**50 (2")**	**80 (3")**	**100 (4")**	**150 (6")**	**200 (8")**	**250 (10")**	**300 (12")**
F1R[1] [mm]	-	315.7	315.2	319.2	325.2	337.2	353.7	373.2	398.9	425.7
F1R[1] [inch]	-	12.4	12.4	12.6	12.8	13.3	13.9	14.7	15.7	16.8
F2R[2] [mm]	-	-	315.7	315.2	319.2	325.2	337.2	353.7	373.2	398.9
F2R[2] [inch]	-	-	12.4	12.4	12.6	12.8	13.3	13.9	14.7	15.7

Dimension b ... n

	b	c	d	e	f	g	h	j	k	l	m	n
[mm]	139	108	276	191	105	97	72	108	9	72	97	226
[inch]	5.46	4.25	10.9	7.53	4.14	3.82	2.84	4.25	0.35	2.84	3.82	8.90

Flow tables

Measuring range limits

Size DN to EN 1092-1	DN to NSI B16.5	Q_{min} EN 1092-1 [m³/h]	Q_{max} EN 1092-1 [m³/h]	Q_{min} ANSI B16.5 [m³/h]	Q_{max} ANSI B16.5 [m³/h]
Water					
15	½"	0.45	5.07	0.44	4.94
25	1"	0.81	11.40	0.81	11.40
40	1½"	2.04	28.58	2.04	28.58
50	2"	3.53	49.48	3.53	49.48
80	3"	7.74	108.37	7.74	108.37
100	4"	13.30	186.22	13.30	186.21
150	6"	30.13	421.86	30.13	421.86
200	8"	56.60	792.42	56.60	792.42
250	10"	90.48	1 266.8	90.48	1 266.8
300	12"	131.41	1 839.8	131.41	1 839.8

Values based on water at 20 °C (68 °F)

Size DN to EN 1092-1	DN to NSI B16.5	Q_{min} EN 1092-1 [m³/h]	Q_{max} EN 1092-1 [m³/h]	Q_{min} ANSI B16.5 [m³/h]	Q_{max} ANSI B16.5 [m³/h]
Air					
15	½"	6.80	25.33	6.72	24.70
25	1"	10.20	81.43	10.20	81.43
40	1½"	25.35	326.63	25.35	326.63
50	2"	43.89	565.49	43.89	565.49
80	3"	96.14	1 238.64	96.14	1 238.6
100	4"	165.19	2 128.27	165.19	2 128.27
150	6"	374.23	4 821.60	374.23	4 821.6
200	8"	702.95	9 056.8	702.95	9 056.8
250	10"	1 123.7	14 478.0	1 123.7	14 478.0
300	12"	1 632.1	21 028.0	1 632.1	21 028.0

Values based on air at 20 °C (68 °F) and 1.013 bar_{abs} (14.7 psi_{abs})

Flow rate limits

Product	Nominal sizes to EN	to ANSI	Minimum flow rates [m/s]	Maximum flow rates [m/s]
Liquids	DN 15 ... DN 300	DN ½" ... DN 12"	0.5 x $(998/\rho)^{0.51}$ [2]	7 x $(998/\rho)^{0.47}$ [1]
Gas, steam/vapor	DN 15 ... DN 300	DN ½" ... DN 12"	6 x $(1.29/\rho)^{0.52}$ [2]	7 x $(998/\rho)^{0.47}$ [3]

ρ = operating density [kg/m³]

1) Minimum flow rate 0.3 m/s (0.984 ft/s) - maximum flow rate 7 m/s (23 ft/s)
2) Minimum flow rate 2 m/s (6.6 ft/s)
3) Maximum flow rate 80 m/s (262 ft/s); DN 15: 45 m/s (148 ft/s) and DN 25: 70 m/s (230 ft/s)

Dimensional drawings (continued)

Measuring range saturated steam: 1 ... 7 bar

Overpressure [bar]		1		3.5		5.2		7	
Density [kg/m³]		1.13498	1.13498	2.4258	2.4258	3.27653	3.27653	4.16732	4.16732
Temperature [°C]		120.6	120.6	148.2	148.2	160.4	160.4	170.6	170.6
Flow [kg/h]		min.	max.	min.	max.	min.	max.	min.	max.
DN to EN 1092-1	**DN to ASME B16.5**								
15	½"	5.87	28.75	7.68	61.46	8.93	83.01	10.06	105.57
25	1"	11.82	92.42	17.28	197.53	20.09	266.81	22.66	339.35
40	1½"	29.64	370.71	43.33	792.33	50.63	1 070.2	56.80	1 361.2
50	2"	51.31	641.82	75.02	1 371.8	87.19	1 852.8	98.33	2 356.6
80	3"	112.41	1 405.8	164.33	3 004.7	191.00	4 058.4	215.39	5 161.8
100	4"	193.14	2 415.5	282.36	5 162.7	328.16	6 973.3	370.09	8 869.2
150	6"	437.56	5 472.4	639.69	11 696.0	743.45	15 798.0	838.44	20 093.0
200	8"	821.9	10 279.0	1 201.6	21 970.0	1 396.5	29 675.0	1 574.9	37 743.0
250	10"	1 313.9	16 433.0	1 920.9	35 122.0	2 232.5	47 439.0	2 517.7	60 337.0
300	12"	1 908.3	23 866.0	2 789.8	51 010.0	3 242.4	68 899.0	3 656.6	87 630.0

Measuring range saturated steam: 10.5 ... 20 bar

Overpressure [bar]		10.5		14.0		17.5		20.0	
Density [kg/m³]		5.88803	5.88803	7.60297	7.60297	9.31702	9.31702	10.5442	10.5442
Temperature [°C]		186.2	186.2	198.5	198.5	208.7	208.7	215.0	215.0
Flow [kg/h]		min.	max.	min.	max.	min.	max.	min.	max.
DN to EN 1092-1	**DN to ANSI B16.5**								
15	½"	12.78	149.17	16.51	192.61	20.23	236.04	22.89	267.12
25	1"	26.93	479.46	30.60	619.11	33.87	758.69	36.04	858.62
40	1½"	67.51	1 878.2	76.72	2 150.7	84.93	2 395.3	90.35	2 557.7
50	2"	116.89	3 251.7	132.82	3 723.4	147.03	4 147.0	156.42	4 428.1
80	3"	256.03	7 122.4	290.93	8 155.8	322.06	9 083.7	342.62	9 699.3
100	4"	439.91	12 238	499.90	14 013.0	553.38	15 608.0	588.69	16 666.0
150	6"	996.62	27 725.0	1 132.5	31 747.0	1 253.7	35 359.0	1 333.7	37 756.0
200	8"	1 872.1	52 079.0	2 127.3	59 634.0	2 354.9	66 419.0	2 505.2	70 921.0
250	10"	2 992.7	83 254.0	3 400.7	95 333.0	3 764.6	106 180.0	4 004.9	113 380.0
300	12"	4 346.5	120 920.0	4 939.1	138 460.0	5 467.5	154 210.0	5 816.5	164 660.0

Measuring range saturated steam: 15 ... 100 psig

Overpressure [psig]		15		50		75		100	
Density [lbs/ft³]		0.0719	0.0719	0.1497	0.1497	0.2036	0.2036	0.2569	0.2569
Temperature [°F]		249.98	249.98	297.86	297.86	320.36	320.36	338.184	338.184
Flow [lbs/h]		min.	max.	min.	max.	min.	max.	min.	max.
DN to EN 1092-1	**DN to ANSI B16.5**								
15	½"	12.95	64.35	16.83	133.87	19.62	182.02	22.04	229.63
25	1"	26.25	206.83	37.86	430.30	44.15	585.06	49.59	738.09
40	1½"	65.81	829.61	94.92	1 726	110.68	2 346.7	124.32	2 960.5
50	2"	113.94	1 436.3	164.34	2 988	191.63	4 062.9	215.23	5 125.6
80	3"	249.57	3 146.1	360.00	6 545.3	419.74	8 899.4	471.45	11 227
100	4"	428.81	5 405.7	618.51	11 246	721.21	15 291	810.06	19 291
150	6"	971.47	12 246	1 401.2	25 478	1 633.9	34 642	1 835.2	43 703
200	8"	1 824.8	23 004	2 632.1	47 859	3 069.1	65 072	3 447.2	82 092
250	10"	2 917.2	36 774	4 207.7	76 508	4 906.4	104 030	5 510.8	131 230
300	12"	4 236.8	53 410	6 111.1	111 120	7 125.8	151 080	8 003.6	190 600

Measuring range saturated steam: 150 ... 300 psig

Overpressure [psig]	150		200		250		300	
Density [lbs/ft³]	0.3627	0.3627	0.4681	0.4681	0.5735	0.5735	0.6792	0.6792
Temperature [°F]	366.08	366.08	388.04	388.04	406.22	406.22	422.06	422.06
Flow [lbs/h]	min.	max.	min.	max.	min.	max.	min.	max.

Dimensional drawings (continued)

Overpressure [psig]		150		200		250		300	
DN to EN 1092-1	DN to ANSI B16.5								
15	½"	27.79	324.21	35.86	418.47	43.94	512.66	52.04	607.12
25	1"	58.93	1 042.1	66.94	1 345.1	74.10	1 647.8	80.63	1 951.5
40	1½"	147.72	4 107.2	167.83	4 702.8	185.76	5 237	202.15	5 728
50	2"	255.75	7 111.9	290.56	8 141.9	321.60	9 066.8	350.00	9 917
80	3"	560.19	15 578	636.44	17 834	704.43	19 860	766.60	21 722
100	4"	962.54	26 766	1 093.5	30 643	1 210.4	34 124	1 317.2	37 324
150	6"	2 180.6	60 639	2 477.4	69 421	2 742.1	77 307	2 984	84 556
200	8"	4 096.1	113 900	4 653.6	130 400	5 150.7	145 210	5 605.2	158 830
250	10"	6 548.1	182 090	7 439.3	208 460	8 234.1	232 140	8 960.6	253 910
300	12"	9 510.2	264 460	10 805	302 760	11 959	337 150	13 014	368 770