Flow Measurement

SITRANS FM (electromagnetic)

Flowmeters with pulsed DC field technology / SITRANS FM100

Overview



The SITRANS FM100 is an electromagnetic flow sensor in a compact design for basic applications in the process and OEM industry.

Benefits

- Connection ½", ¾", 1", 2"
- Flow- and temperature measurement
- IO-Link communication
- Dosing function with external control output
- Colored, multi-parameter configurable TFT display, rotatable 90°
- Bidirectional measuring
- Intuitive setup menu via 4 optical touch keys
- 2 freely configurable outputs
- All-metal design: stainless steel
- Included in Quick Ship Program (delivery time see PIA LCP)

Application

The main applications of the SITRANS FM electromagnetic flow sensors can be found in the following fields:

- OEM industry
- Process industry
- Small water cycles: e.g. cooling water, water leakage
- Dosing e.g. in chemical industry

Design

The SITRANS FM100 is designed to measure small- and medium sized flow of conductive liquids. The small build allows to fit the device in almost any space. The robust stainless-steel housing protects the device in changing surroundings.

The measurement is displayed on the local screen as well as accessible via 2 freely configurable outputs (pulse-/frequency-/alarm- and analogue).

Mode of operation

The flow measuring principle is based on Faraday's law of electromagnetic induction according to which the sensor converts the flow into an electrical voltage proportional to the velocity of the flow.

Update 07/2025

Integration

Pressure loss

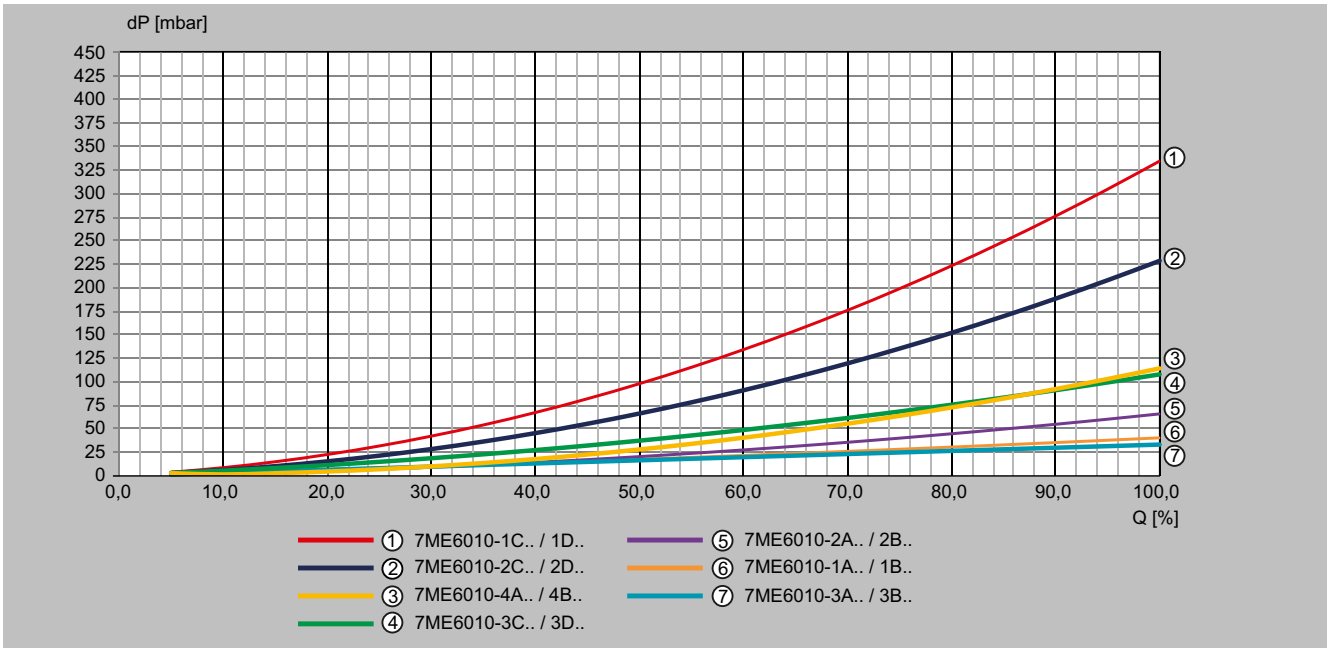

Selection and ordering data

SITRANS FM100 flowmeter	Article No. 7ME6010-	●	●	●	●	●
Click on the Article No. for the online configuration in the PIA Life Cycle Portal.						
Process connection, measuring range						
Male thread G1/2", 0.03 ... 3 l/min		1	A			
Male thread G1/2", 0.25 ... 48 gal/h		1	B			
Male thread G1/2", 0.04 ... 10 l/min		1	C			
Male thread G1/2", 0.011 ... 2,6 gal/min		1	D			
Male thread G3/4", 0.1 ... 25 l/min		2	A			
Male thread G3/4", 0.025 ... 6,6 gal/min		2	B			
Male thread G3/4", 0.2 ... 50 l/min		2	C			
Male thread G3/4", 0.053 ... 13 gal/min		2	D			
Male thread G1", 0.2 ... 50 l/min		3	A			
Male thread G1", 0.053 ... 13 gal/min		3	B			
Male thread G1", 0.4 ... 100 l/min		3	C			
Male thread G1", 0.1 ... 26 gal/min		3	D			
Male thread G2", 1.5 ... 350 l/min		4	A			
Female thread 2" NPT, 0.4 ... 92 gal/min		4	B			
Transmitter design						
Compact design without cable				A		
Gasket material						
FKM/FPM					0	
EPDM					1	
Quality inspection certificate						
Without						0
3-point factory calibration						3
5-point factory calibration						5

Technical specifications

FM100	
Measuring principle	Electromagnetic induction
Media	Conductive liquid with ≥ 20 µS/cm
Accuracy	< ±(0.8 % of reading + 0.5 % of full scale)[1]
Repeatability	±0.2 % of full scale
Response time flow t_{90}	
• Alarm/pulse/frequency output	< 100 ms
• Current output	< 1 s
Temperature measurement	
Sensor	PT1000
Accuracy	≤ ±2 °C (flow > 0.2 m/s)
Measuring range	Temperature range of media
Response time temperature t_{90} (signal output)	< 20 s
Process connection	
Nominal size	G ½" ... G 2" Compatible NPT adapter available (¼" ... 2")
Process connection	Threaded fitting
Rated operation conditions	
Mounting position	In all directions, bidirectional measuring
In-/outlet	3 × diameter / 2 × diameter
Ambient temperature	-20 ... +70 °C (-4 ... +158 °F)
Enclosure rating	IP67
Operating pressure	Max. 16 bar
Pressure drop	See pressure loss diagram
Mechanical load	
• Shock resistance	DIN EN 60068-2-27:2010: 20 g (11 ms)
• Vibration resistance	DIN EN 60068-2-6:2008: 5 g (10 ... 2 000 Hz)
• Environmental testing	DIN EN 60068-2-30:2006: severity level b
EMC	2014/30/EU
Design	
Weight	See dimensional drawings
Housing material	Stainless steel 1.4404
Electrode material	Stainless steel 1.4404
Connection fitting	Stainless steel 1.4404
Insulation parts	PEEK
Seals	FKM (Option: EPDM)
Display	PMMA
	Operation via 4 optical touch sensors (operation with hand gloves)
	TFT display, 128 × 128 pixels, 1.4" display, orientation in 90° steps adjustable, repetition rate adjustable 0.5 ... 10 s
Cable entries	M12x1 4-pin connection
Dimensions	See dimensional drawings

FM100	
Electrical data	
Power supply	19 ... 30 V DC
Power consumption	Max. 200 mA
Outputs	
• Frequency	Push-Pull, freely scalable, 2kHz @ overflow
	f_{min} @ FS = 50 Hz
	f_{max} @ FS = 1 000 Hz
• Pulse	Push-Pull, freely scalable, configurable for partial and accumulated totalizer
• Alarm	NPN, PNP, Push-Pull, configurable max. 30 V DC, max. 200 mA short-circuit proof
• Current	0(4) ... 20 mA (active) or 0(2) ... 10 V DC
	Max. load 500 Ω
Input	
• Control	Active signal U_{high} max. 30 V DC
	0 < Low < 10 V DC
	15 V DC < High < Vs
• Dosing function	Dosing output OUT2:
	Push-Pull, High active
	Control input OUT1:
	START/STOP 0.5 s < t_{high} < 4 s
	RESET t_{high} > 5 s
Communication	**IO-Link**
• Manufacturer ID	42 (decimal), 0x002A (hex)
• Manufacturer name	Siemens AG
• Version	V1.1
• Bitrate	COM3
• Minimal cycle time	1.1 ms
• SIO-Mode	Yes (OUT1 in configuration IO-Link)
• Block parameterization	Yes
• Operational readiness	10 s
• Max. cable length	20 m

[1] Under reference conditions:
- Media temperature: 15 ... 30 °C
- Ambient temperature: 15 ... 30 °C
- 1 cST
- 500 µS/cm
- 1 bar

Factory calibration points

Type	Measuring range	Quality inspection certificate	Measuring point [l/min] 1	2	3	4	5
7ME6010	1A, 1B	0	1.5	-	-	-	-
		3	0.5	1.5	2.5	-	-
		5	0.5	1	1.5	2	2.5
	1C, 1D	0	5	-	-	-	-
		3	1	5	8	-	-
		5	0.5	2	5	6	8

Technical specifications (continued)

Type	Measuring range	Quality inspection certificate	Measuring point [l/min] 1	2	3	4	5
7ME6010	2A, 2B	0	12	-	-	-	-
		3	2	12	20	-	-
		5	0.5	2	12	15	20
	2C, 2D	0	25	-	-	-	-
		3	4	25	50	-	-
		5	4	15	25	30	40
	3C, 3D	0	50	-	-	-	-
		3	20	50	80	-	-
		5	8	20	50	60	80
	4A, 4B	0	170	-	-	-	-
		3	20	170	280	-	-
		5	20	100	170	200	280

Dimensional drawings

SITRANS FM100 flowmeter with compact transmitter

Process connection G1/2", G3/4" and G1

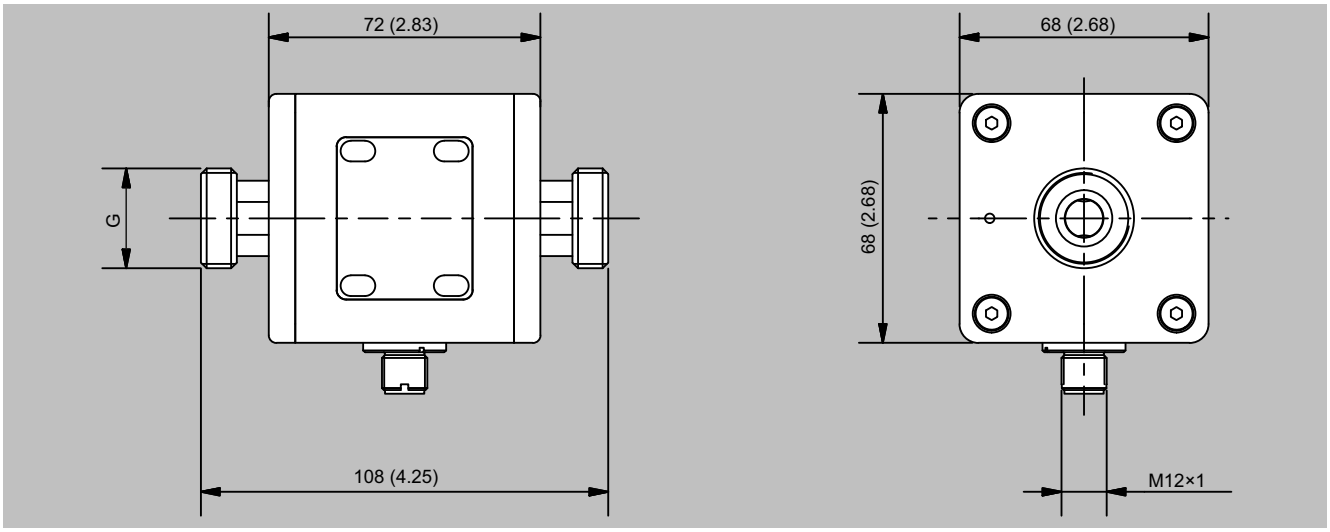

SITRANS FM100 with compact transmitter, process connection G1/2", G3/4" and G1"; dimensions in mm (inch)

Process connection	Nominal size	Weight (g)
Male thread	G1/2"	998
Male thread	G3/4"	988
Male thread	G1"	1010

Process connection G2"

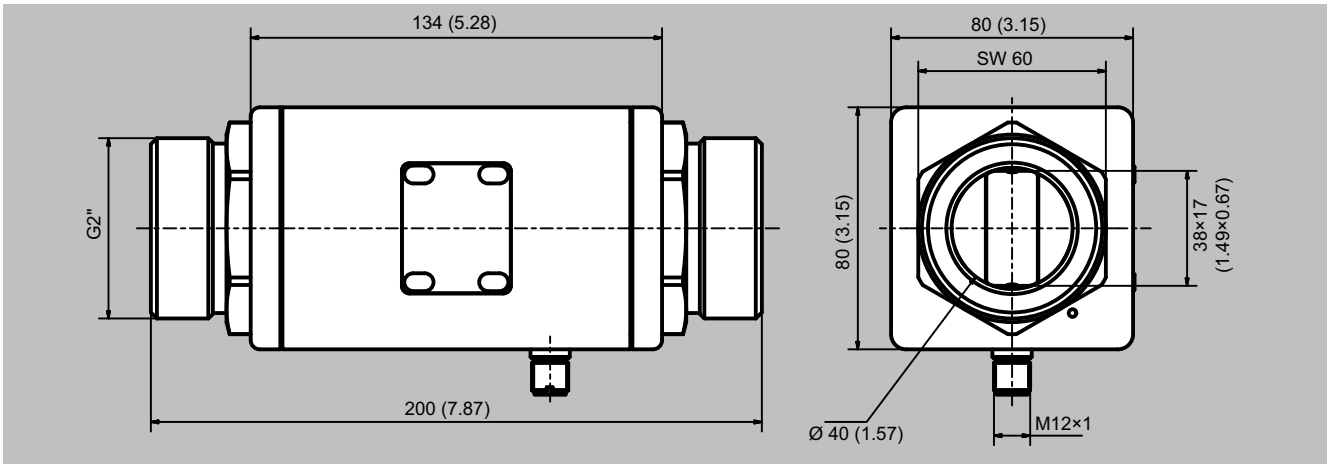

SITRANS FM100 with compact transmitter, process connection G2"; dimensions in mm (inch)

Process connection	Nominal size	Weight (g)
Male thread	G2"	2420

Dimensional drawings (continued)

Process connection 2" NPT IG

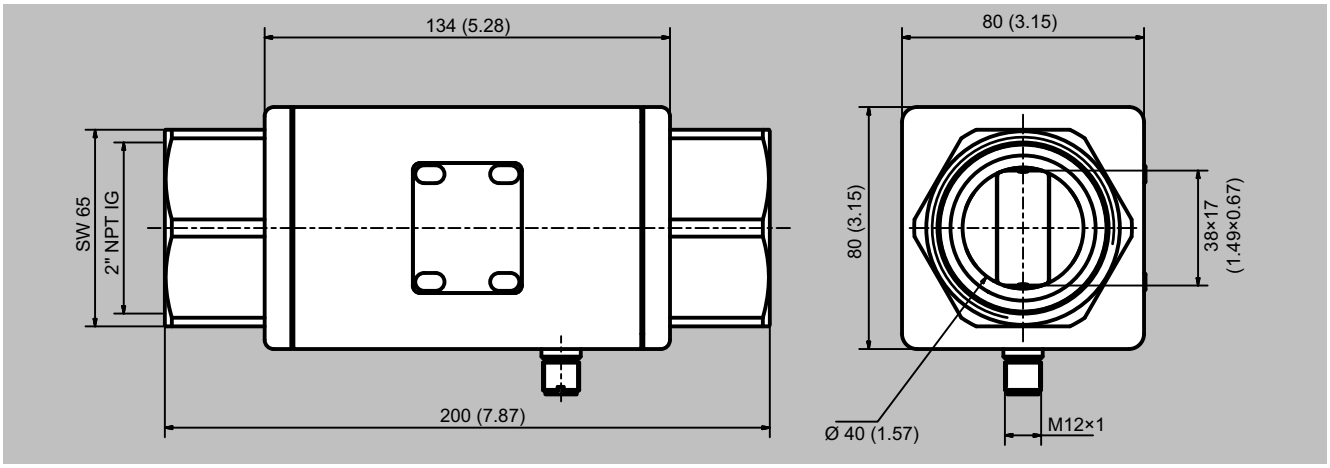

SITRANS FM100 with compact transmitter, process connection 2" NPT (female); dimensions in mm (inch)

Process connection	Nominal size	Weight (g)
Female thread	2" NPT IG	2140

SITRANS FM100 inner diameters

Connection, nominal size	Inside diameters (DN)	Range
G1/2"	5 mm	0.03 ... 3 l/min / 0.04 ... 10 l/min
G3/4"	10 mm	0.1 ... 25 l/min / 0.2 ... 50 l/min
G1"	15 mm	0.2 ... 50 l/min / 0.4 ... 100 l/min
2" NPT IG	see dimensional drawings	1.5 ... 350 l/min