FLUXER
FLOOD CONTROL

Type 2300







Pneumatically operated 2 way angle seat control valve ELEMENT

- Excellent combination of good control characteristic and high flow rate
- Long service life
- Control units can be mounted directly without external tubing
- Stainless steel housing with thread, clamp and weld end connection

Product variants described in the data sheet may differ from the product presentation and description.

Can be combined with

	**Type 8696** Digital electropneumatic positioner for the integrated mounting on process control valves
	**Type 8693** Digital electropneumatic process controller for the integrated mounting on process control valves
	**Type 8692** Digital electropneumatic Positioner for the integrated mounting on process control valves
	**Type 8694** Digital electropneumatic positioner for the integrated mounting on process control valves
	**Type 8792** Digital electropneumatic Positioner SideControl
	**Type 8793** Digital electropneumatic Process Controller SideControl

Type description

In line with Bürkert's philosophy for modular valves and sensors the construction of Type 2300 angle-seat valve fulfils tough criteria for process environments. Unrivalled cycle life and sealing integrity is guaranteed by the proven self adjusting packing gland.

The parabolic trim results in a flow characteristic approximately 35 % larger than conventional control valves. It is available in either stainless steel on stainless steel or with a durable PTFE seal for tight shut-off. The design enables the easy integration of automation modules whether they are digital electropneumatic positioner or process controller.

The fully integrated system has a compact and smooth design, integrated pneumatic lines, IP65/67, NEMA Type 4X protection class and superior chemical resistance. This system has been engineered for reliable accurate control in applications where high flow rate is an advantage.

16.08.2022

1. General technical data

Product properties	
Dimensions	Detailed information can be found in chapter “5. Dimensions” on page 5.
Material	Detailed information can be found in chapter “4. Materials” on page 4.
Design	Angle seat control valve
Nominal diameter	DN10…DN65, NPS ⅜…NPS 2½
Safety setting in case of power failure	Normally closed (control function A), normally open (control function B)
Flow direction	Flow to open (below seat)
Performance data	
Operating pressure	0 bar(g) … 25 bar(g), vacuum version up to -0.9 bar (g) (Option), see “6.1. Fluidic data” on page 11
Nominal pressure	PN25 (DIN EN 1333), Class 150 (DIN EN 1759)
Pilot pressure	5.6 bar(g)… 7 bar(g)
Seat leakage	Acc. DIN EN 60534-4:2006, see “6.1. Fluidic data” on page 11
Leakage class III and IV	Stainless steel
Leakage class VI	PTFE and PEEK
K_v value	5 m^3/h…90 m^3/h, see “6.1. Fluidic data” on page 11
Operating characteristic	Modified equal percentage
Medium data	
Medium	Steam, neutral gases, water, alcohol, oils, fuels, hydraulic fluids, salt solutions, alkalis, organic solvents, oxygen (option)
Medium temperature	-40 °C…230 °C, see “6.2. Operating limits” on page 13
Viscosity	Max. 600 mm^2/s
Control medium	Air, neutral gases
Process/Port connection & communication	
Port connection	
Threaded connection	G (EN ISO 228-1) Rc (ISO 7/1 /DIN EN 10226-2) NPT (ASME B 1.20.1)
Welded connection	DIN EN ISO 1127/ISO 4200/DIN 11866 B DIN 11850 2/DIN 11866 A ASME BPE/DIN 11866 C SMS 3008
Clamp connection	DIN 32676 B (pipe ISO 4200) DIN 32676 A (pipe DIN 11850 2) ASME BPE
Approvals and certificates	
Conformity	Food contact 1935/2004(EG), FDA Drinking water Pressure equipment directive Machinery Directive Detailed information can be found in chapter “3. Approvals” on page 3.
Approval	Explosion proof ATEX / IECex
Material certificate	2.2, 3.1
Environment and installation	
Ambient temperature	-10 °C…80 °C (with Remote Sensor Type 8798 for positioner or process controller, Type 8791/8792/8793) -10 °C…55 °C (with positioner or process controller, Type 8692/8693/8694)
Degree of protection	IP65/67
Installation position	As required, preferably with actuator in upright position

2. Circuit functions

Control function (CF)	Description	
Flow direction below seat for fluids, steam and gases		
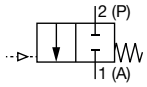	**CF: A, pneumatically operated control valve** 2/2 way Flow direction below seat Normally closed by spring force	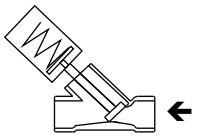
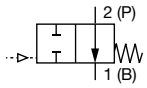	**CF: B, pneumatically operated control valve** 2/2 way Flow direction below seat Normally open by spring force	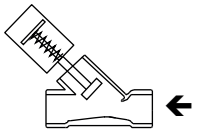

3. Approvals

Approvals	Description
	Food produce contact Materials in contact with the medium conform to EC regulation 1935/2004 (option) Materials in contact with the medium conform to FDA (option)
H_2O	**Drinking water** Suitable for use with drinking water for medium temperatures up to 85 °C in accordance with the Drinking Water Ordinance §17 and the assessment principles of the Federal Environment Agency (option).
O_2	**Oxygen** Suitable for use with gaseous oxygen for medium temperature up to 60 °C and operating pressure up to 25 bar(g) (option)
	Explosion proof As category 2 device suitable for zone 1/21 and zone 2/22 (option) **ATEX**: II 2G Ex h IIC T4 Gb II 2D Ex h IIIC T135 °C Db **IECEx**: Ex h IIC T4 Gb Ex h IIIC T135 °C Db
	Safety requirements Evaluation of functional safety according to IEC 61508 (on request)

4. Materials

4.1. Material specifications

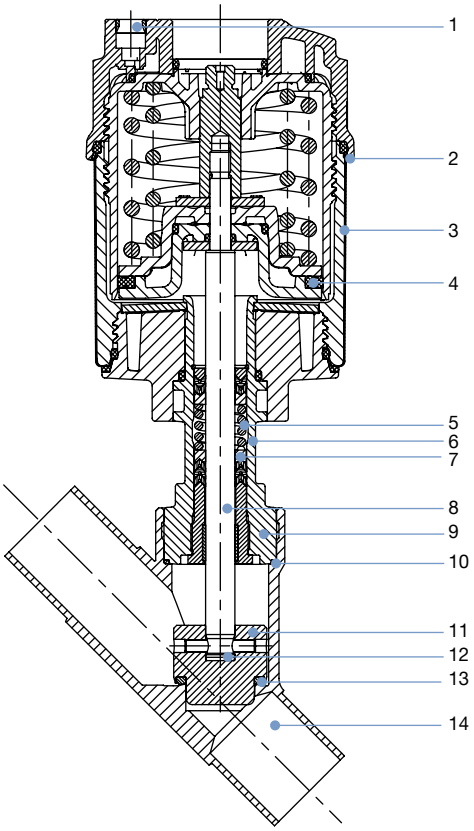

No.	Element	Material
1	Pilot air ports	Push-in connector PP (Standard)
2	Actuator	PPS
3	Cover	Stainless steel 1.4561 (316Ti)
4	Piston seal	FKM
5	Spring	Stainless steel 1.4310
6	Pipe	Stainless steel 1.4401 (316) / 1.4404 (316L)
7	Spindle sealing	PTFE V-Rings (filled), with spring compensation
8	Spindle	Stainless steel 1.4401 (316) / 1.4404 (316L)
9	Spindle guide	Stainless steel 1.4404 (316L)
10	Body seal	Graphite or PTFE
11	Control cone	Stainless steel 1.4571
12	Spring straight pin	Stainless steel 1.4310
13	Seat seal	Stainless steel 1.4571, PTFE or PEEK
14	Valve body	Stainless steel CF3M

5. Dimensions

5.1. Actuator

Note:
Dimensions in mm

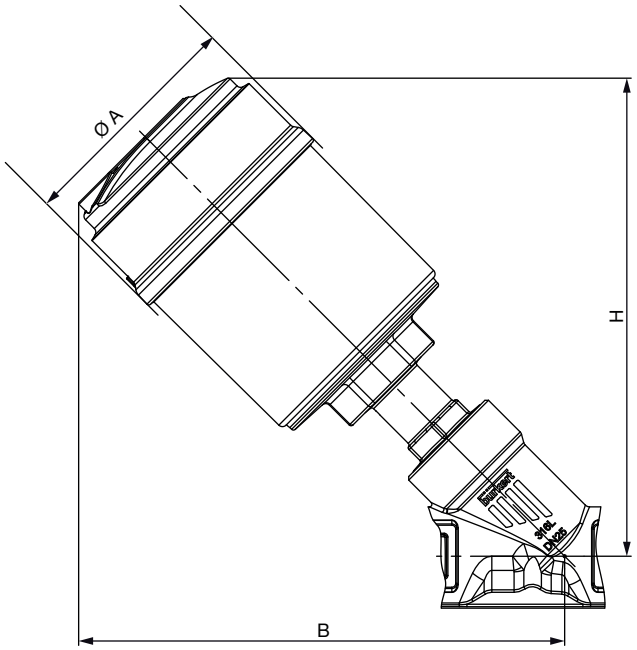

Nominal diameter (pipe)		Actuator size	Ø A	B[1.)]	H[1.)]
DN	NPS				
10	⅜	50(D)	64.5	166	163
		70(M)	91	182	178
15	½	50(D)	64.5	166	163
		70(M)	91	182	178
20	¾	50(D)	64.5	174	171
		70(M)	91	189	186
25	1	50(D)	64.5	175	173
		70(M)	91	191	188
		90(N)	120	228	227
32	1¼	90(N)	120	201	197
		130(P)	159	243	242
40	1½	90(N)	120	247	246
		130(P)	159	296	296
50	2	90(N)	120	262	261
		130(P)	159	312	312
65	2½	130(P)	159	342	342

1.) Dimensions for B and H are maximum dimensions and can be up to 6 mm smaller, depending on nominal diameter and standard.

Valve system Continuous ELEMENT

Note:

- Dimensions in mm, unless otherwise stated
- Please note actuator size A in table **"5.1. Actuator" on page 5**

With positioner TopControl **Type 8692**
or with process controller TopControl **Type 8693**

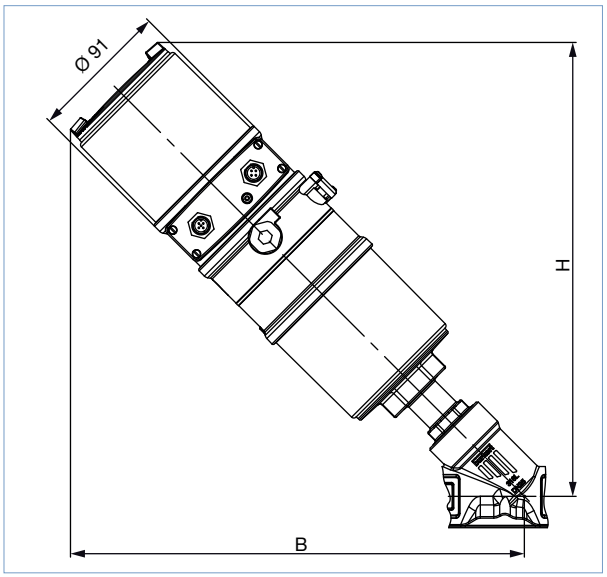

With positioner TopControl Basic **Type 8694**

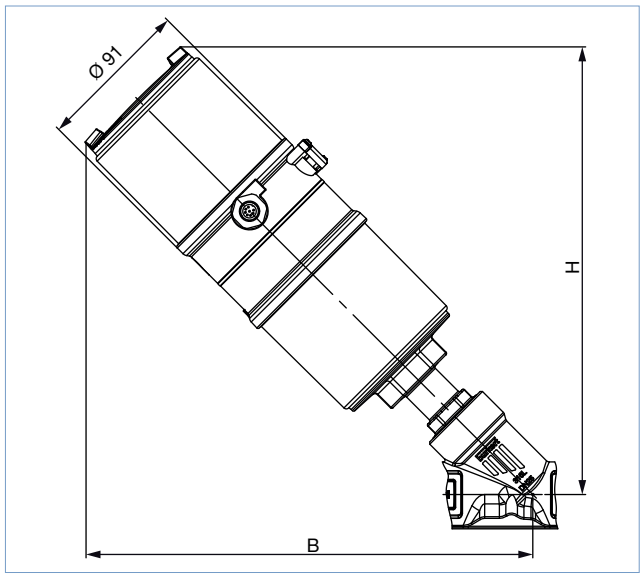

With positioner TopControl **Type 8696**

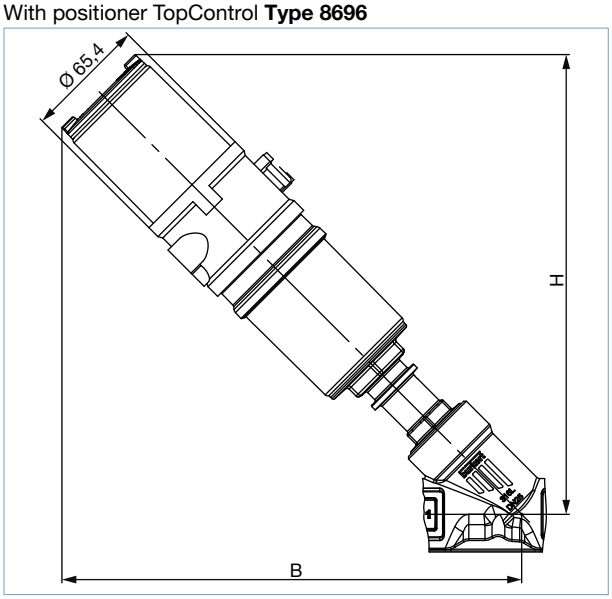

Nominal diameter (pipe)		Actuator size	B/H[1.] with	
DN	NPS		8692 or 8693	8694 or 8696
10	⅜	50(D)	–	239
		70(M)	285	257
15	½	50(D)	–	239
		70(M)	285	257
20	¾	50(D)	–	247
		70(M)	293	264
25	1	50(D)	–	249
		70(M)	295	266
		90(N)	332	303
32	1¼	90(N)	304	276
		130(P)	347	318
40	1½	90(N)	351	322
		130(P)	387	359
50	2	90(N)	366	337
		130(P)	403	375
65	2½	130(P)	433	405

1.) Dimensions for B and H are maximum dimensions and can be up to 6 mm smaller, depending on nominal diameter and standard.

With remote positioner SideControl **Type 8792**
or with remote process controller SideControl **Type 8793**

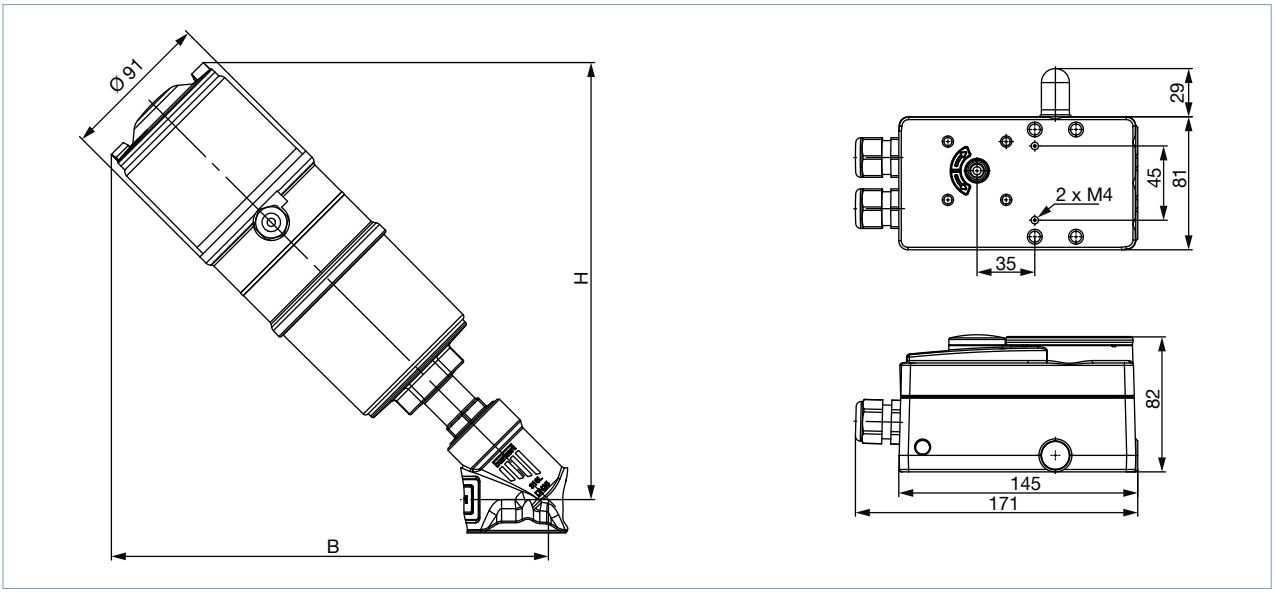

Nominal diameter (pipe)		Actuator size	B / H with 8792 or 8793
DN	NPS		
10	⅜	70(M)	257
15	½	70(M)	257
20	¾	70(M)	264
25	1	70(M)	266
		90(N)	303
32	1¼	90(N)	276
		130(P)	318
40	1½	90(N)	322
		130(P)	359
50	2	90(N)	337
		130(P)	375
65	2½	130(P)	405

1.) Dimensions for B and H are maximum dimensions and can be up to 6 mm smaller, depending on nominal diameter and standard.

5.2. Body with threaded connection

Note:
Dimensions in mm, unless otherwise stated

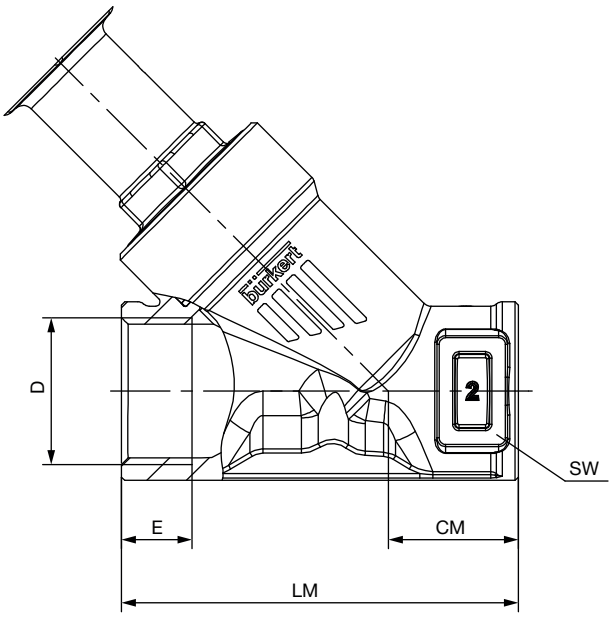

Nominal diameter (pipe)	G, Rc, NPT (EN ISO 228-1, ISO 7/1/DIN EN 10226-2, ASME B 1.20.1)						
	D	E			CM	LM	SW
[DN]	[NPS]	[G]	[NPT]	[Rc]			
15	½	14	13.7	13.2	24	65	27
20	¾	16	14.0	14.5	27	75	34
25	1	18	16.8	16.8	29.5	90	41
32	1¼	16	17.3	19.1	36	110	50
40	1½	18	17.3	19.1	35	120	55
50	2	24	17.6	23.4	45	150	70
65	2½	26	23.7	26.7	57	185	85

5.3. Body with welded connection

Note:
Dimensions in mm, unless otherwise stated

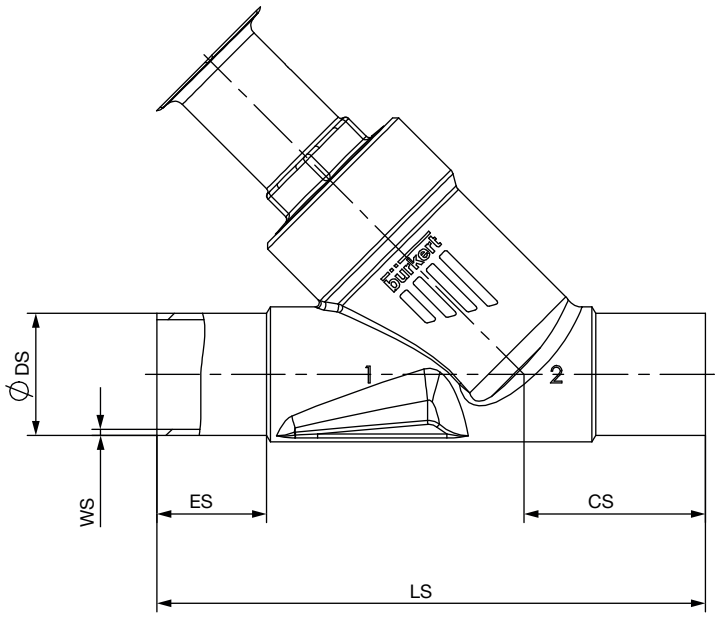

Nominal diameter (pipe)	DIN EN ISO 1127 ISO 4200 DIN 11866 B					DIN 11850 2 DIN 11866 A				
[DN]	ES	CS	LS	ØDS	WS	ES	CS	LS	ØDS	WS
15	19	34	100	21.3	1.6	19	34	100	19	1.5
20	20	39	115	26.9	1.6	20	39	115	23	1.5
25	26	43	130	33.7	2.0	26	43	130	29	1.5
32	26	45	145	42.4	2.0	26	45	145	35	1.5
40	26	49	160	48.3	2.0	26	49	160	41	1.5
50	26	50	175	60.3	2.0	26	50	175	53	1.5
65	26	50	210	76.1	2.3	26	50	210	70	2

Nominal diameter (pipe)	ASME BPE DIN 11866 C				
[NPS]	ES	CS	LS	ØDS	WS
½	30	46	135	12.7	1.65
¾	30	52	145	19.05	1.65
1	30	51	152	25.4	1.65
1½	30	60	182	38.1	1.65
2	30	64	210	50.8	1.65
2½	26	56	230	63.5	1.65

5.4. Body with clamp connection

Note:
Dimensions in mm

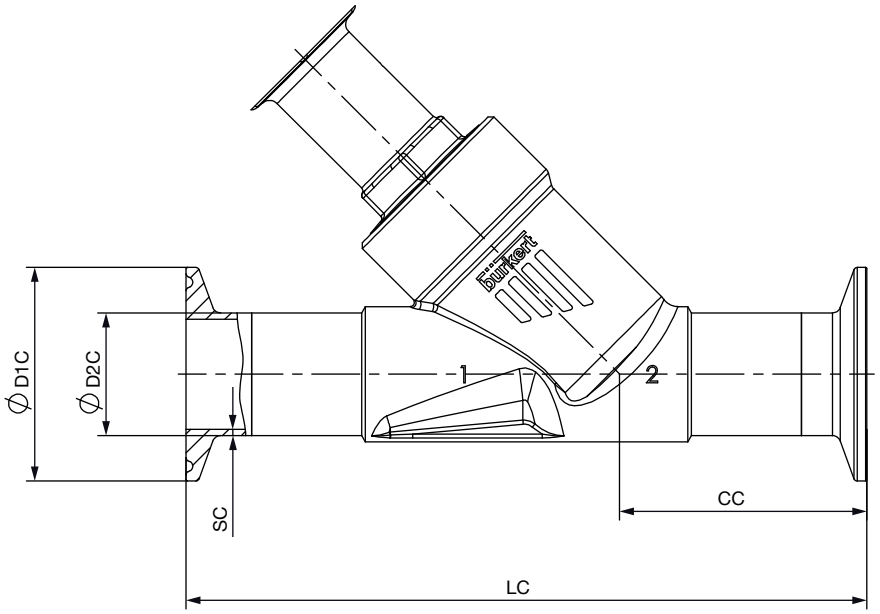

Nominal diameter (pipe)	Clamp: DIN 32676 B Pipe: EN ISO 1127 1 ISO 4200 DIN 11866 B					Clamp: DIN 32676 A (DN15 similar DIN 32676 B) Pipe: DIN 11850 2 DIN 11866 A				
DN	**LC**	**CC**	**ØD1C**	**ØD2C**	**SC**	**LC**	**CC**	**ØD1C**	**ØD2C**	**SC**
15	156	49.0	50.5	21.3	1.6	130	49.5	34.0	19	1.5
20	150	56.5	50.5	26.9	1.6	150	57.0	34.0	23	1.5
25	160	58.0	50.5	33.7	2.0	160	58.5	50.5	29	1.5
32	200	57.5	50.5	42.4	2.0	180	58.0	50.5	35	1.5
40	200	69.0	64.0	48.3	2.0	200	69.5	50.5	41	1.5
50	230	77.5	77.5	60.3	2.6	230	78.0	64.0	53	1.5

Nominal diameter (pipe)	Clamp: ASME BPE Pipe: ASME BPE DIN 11866 C				
NPS	**LC**	**CC**	**ØD1C**	**ØD2C**	**SC**
½	130	49.0	25.0	12.7	1.65
¾	150	56.5	25.0	19.05	1.65
1	160	58.0	50.5	25.4	1.65
1½	200	69.0	50.5	38.1	1.65
2	230	77.5	64.0	50.8	1.65

6. Performance specifications

6.1. Fluidic data

Flow characteristics

Note:

- Modified equal percentage flow characteristic
- Higher flow values compared to globe control valves

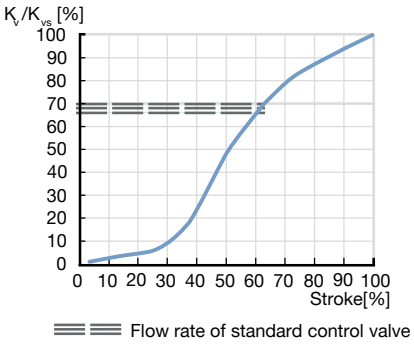

Overview of fluidic data for flow below seat (for fluids, steam and gases)

Note:

- K_V value [m³/h]: Measured with water acc. to DIN EN 60534-2-4
- See "6.2. Operating limits" on page 13

Nominal diameter (pipe)		Actuator size Ø	Operating pressure max. CF: A (Seat leakage class)			K_V value at stroke [m³/h]						K_{VS} value
			Seat seal									
			Stainless steel	PTFE	PEEK							
[DN]	[NPS]	[mm]	[bar(g)]	[bar(g)]	[bar(g)]	5 %	10 %	30 %	50 %	70 %	90 %	[m³/h]
15	½	50(D)	16 (IV)	16 (VI)	10 (VI)	0.16	0.17	0.40	2.7	4.0	4.8	5.0
		70(M)	25 (IV)	25 (VI)	25 (VI)							
20	¾	70(M)	25 (IV)	25 (VI)	10 (VI)	0.26	0.27	1.1	5.9	8.3	9.6	10.0
		90(N)	25 (IV)	25 (VI)	25 (VI)							
25	1	70(M)	12 (IV)	12 (VI)	7 (VI)	0.34	0.36	1.5	8.9	13.0	15.4	16.0
		90(N)	25 (IV)	25 (VI)	20 (VI)							
32	1¼	70(M)	6 (III)	6 (VI)	–	0.43	0.52	1.4	9.3	16.4	21.5	23.0
		90(N)	16 (IV)	16 (VI)	10 (VI)							
		130(P)	25 (IV)	25 (VI)	20 (VI)							
40	1½	90(N)	12 (III)	12 (VI)	7 (VI)	0.47	0.62	2.6	17.0	25.5	31.5	34.0
		130(P)	25 (IV)	25 (VI)	20 (VI)	0.48	0.66	5.1	20.0	28.5	34.5	36.0
50	2	90(N)	7 (III)	7 (VI)	–	0.85	1.1	2.7	20.0	35.5	45.0	49.0
		130(P)	25 (20*) (IV)	25 (20*) (VI)	20 (VI)	0.87	1.2	4.0	26.0	40.5	48.0	53
65	2½	130(P)	16 (15*) (IV)	16 (15*) (VI)	10 (VI)	1.7	2.0	20.0	48.0	67	83	90

1.) According to pressure equipment directive 97/23/EC for compressible fluids of group 1 (dangerous gases and vapours) according to Article 3 number 1.3 letter a first indent)

2.) Normally open by spring force: see "2. Circuit functions" on page 3

Pilot pressure diagram with flow direction below seat (control function B)

Actuator size Ø: 50 mm

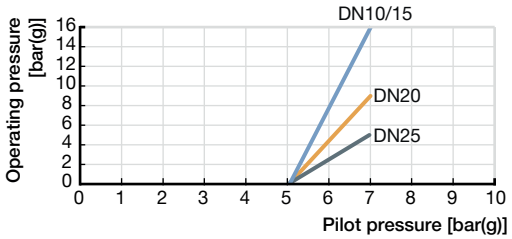

Actuator size Ø: 70 mm

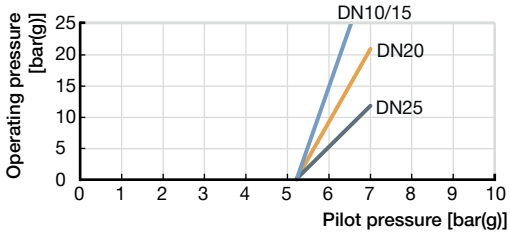

Actuator size Ø: 90 mm

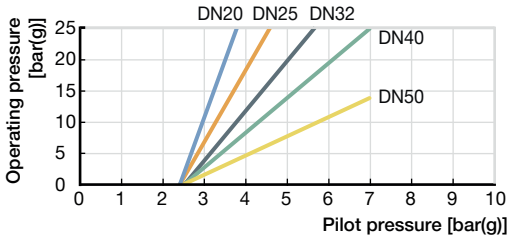

Actuator size Ø: 130 mm

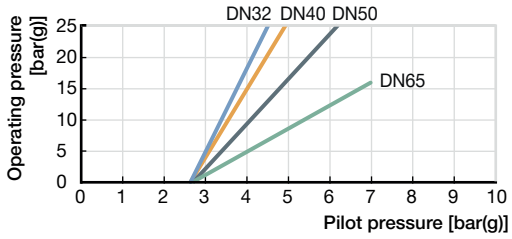

6.2. Operating limits

Operating limits for medium temperature and operating pressure

The operating range of Bürkert process valves is in addition to the maximum operating pressures limited by the nominal pressure according to the relevant standard.

Application limits of operating pressure and medium pressure

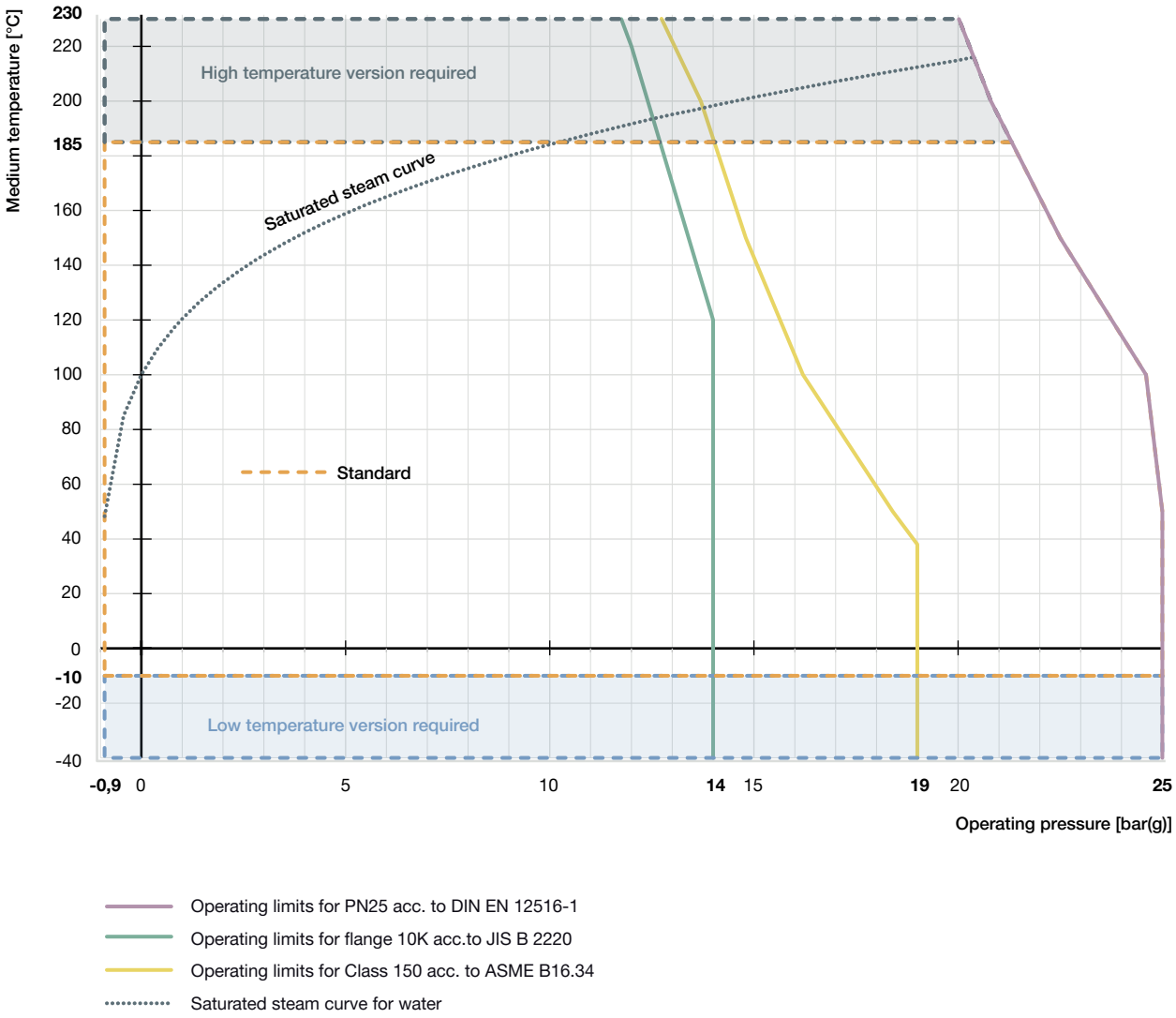

Operating limits for PN25 acc. to DIN EN 12516-1

Operating limits for flange 10K acc.to JIS B 2220

Operating limits for Class 150 acc. to ASME B16.34

Saturated steam curve for water

Operating limits for ambient and medium temperature

ELEMENT Actuator

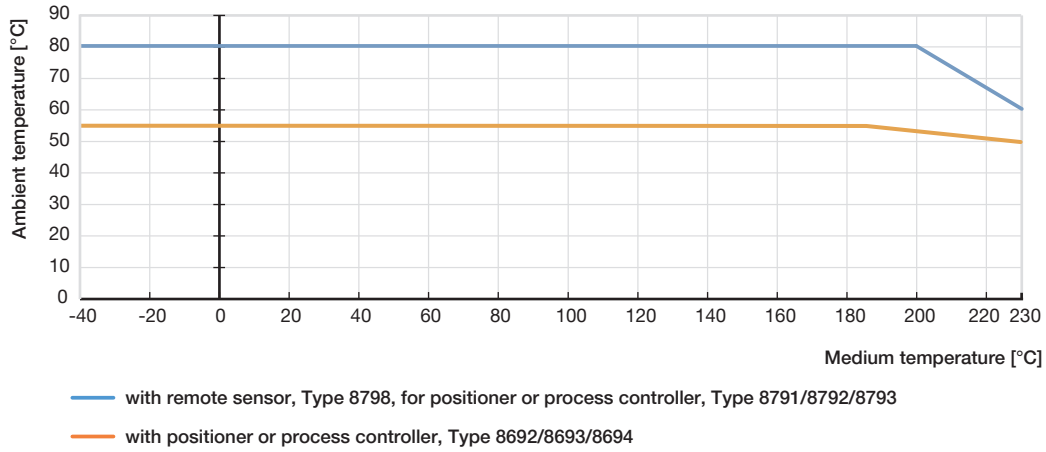

Operating limits seat seal

Tight sealing required	Leakage class (DIN EN 60534-4)	Medium temperature	Seat seal
No An additional shut-off valve is recommended	III / IV (metal seals) Metal-sealed valves have larger leakages (0.1 % or 0.01 % of the nominal flow rate are permissible). Metallic seals are impervious even under demanding process conditions.	-40…230 °C	Stainless steel
Yes An additional shut-off valve is often unnecessary.	VI (soft seals) By using plastics as sealing material, the control valves can close tightly. Their use is not recommended in cases of increased erosion due to demanding process conditions.	-40…130 °C (recommended for ≤ 130 °C)	PTFE
		-10…230 °C (recommended for > 130 °C)	PEEK

Operating limits for optional versions

High temperature version
By adapting the spindle sealing this version is suitable for applications with steam, neutral gases and other heat transfer mediums up to 230 °C.

Hot water version
For applications with hot water up to 200 °C; a special configuration of the spindle seal increases the lifetime significantly. It is recommended for water temperatures starting at 85 °C.

Drinking water version
Materials in contact with the medium are tested for suitability with drinking water up to 85 °C.

Vacuum version
Without leakage bore, this design is suitable for pressures down to -0.9 bar(g).

Low temperature version
Suitable for minimum medium temperatures down to -40 °C

Version for oxygen
Non-metallic materials in contact with the medium are tested for suitability with oxygen. Suitable for operating pressures up to 25 bar(g) and medium temperatures up to 60 °C.

7. Product accessories

Process controller TopControl	
Type 8693 **Actuator size Ø 70/90/130 mm**	**Description**
	The intelligent process controller Type 8693 is designed for integrated mounting on pneumatic actuators from the process control valve series Type 23xx/2103 and especially for the requirements of hygienic process conditions. Using the TUNE-Functions, the process and positioner can be initialized automatically. Easy operation and selection of additional software functions as well as parameterization are carried out via the large graphic display and the membrane keypad. Device configuration and parameterization can also be conveniently carried out by the Bürkert Communicator software tool via a PC interface. **Features** • Contactless position sensor • Universal control system for single and double acting actuators • Highly dynamic actuating system without internal control air consumption in the balanced state • Integrated diagnostic functions for valve monitoring • Automatic initialization of the positioner and process controller using the TUNE-Function • Safeguarding in the event of failure of the electrical or pneumatic auxiliary power • PROFIBUS DP-V1, EtherNet/IP, PROFINET, Modbus TCP, Bürkert system bus (büS) • Compact and robust hygienic stainless steel design **Customer benefits** • Quick and easy commissioning • Intuitive and simple operation via graphic display with backlight and membrane keyboard • High system availability due to increased drive service life by means of spring chamber ventilation • Guaranteed reliability and predictable maintenance through valve monitoring and diagnostics • Easy maintenance and process monitoring

Positioner TopControl	
Type 8692 **Actuator size Ø 70/90/130 mm**	**Description**
	The intelligent electropneumatic positioner Type 8692 is designed for integrated attachment to pneumatic actuators of the process control valve series Type 23xx/2103 and especially for the requirements of hygienic process conditions. The positioner can be initialized automatically using the TUNE-Function. Easy operation and the selection of the extensive additional software functions as well as parameterization are carried out via the large graphic display and the membrane keypad. The device configuration and parameterization can also be conveniently carried out using the Bürkert Communicator software tool via a PC interface. **Features** • Contactless position sensor • Universal positioning system for single and double-acting actuators • Highly dynamic positioning system without internal control air consumption • Integrated diagnostic functions for valve monitoring • Automatic initialization of the positioner by means of the TUNE-Function • Safeguard in the event of failure of the electrical or pneumatic auxiliary power • PROFIBUS DP-V1, EtherNet/IP, PROFINET, Modbus TCP, Bürkert system bus (büS) • Compact and robust hygienic stainless steel design **Customer benefits** • Quick and easy commissioning • Intuitive and simple operation via graphic display with backlight and touch keypad • Guaranteed reliability and predictable maintenance through valve monitoring and diagnostics • A high degree of system availability due to increased drive service life by means of spring chamber ventilation
Positioner TopControl BASIC	
Type 8694 **Actuator size Ø 70/90/130 mm**	**Description**
	The compact positioner Type 8694/8696 is designed for integrated attachment to pneumatic actuators of the Type 23xx/2103 Process Control Valve series and especially for the requirements of hygienic process conditions. Operation and parameterization are performed via push buttons and DIP switches. The device configuration and parameterization can also be conveniently carried out using the Bürkert Communicator software tool via a PC interface. **Features** • Contactless position sensor • Universal positioning system for single and double-acting actuators • Ultra dynamic positioning system without internal control air consumption • AS-Interface, IO-Link, Bürkert system bus (büS) (only 8694) • Compact and robust hygienic stainless steel design **Customer benefits** • Simple and safe commissioning through Teach-In function • Minimum space requirement in the plant pipework for more flexibility in plant design • A high degree of system availability due to increased drive service life by means of spring chamber ventilation
Type 8696 **Actuator size Ø 50 mm**	
	

Process controller SideControl Remote	
Type 8793 with Remote Sensor 8798 Actuator size Ø 70/90/130 mm	**Description**
	The intelligent digital positioner/process controller Type 8793 is designed for mounting on lift or swivel drives with standardization in accordance with IEC 534-6 or VDI/VDE 3845 and is designed for demanding control tasks. The version with remote position sensor Type 8798 is used to control Bürkert process control valves. It is operated via a backlit graphic display. The initialization of process and positioner can be done automatically by means of TUNE-Function. Here the type of controlled system is automatically recognized and the appropriate controller structure with the corresponding optimum parameter set is determined. **Features** • Universal control system for single and double acting actuators • Integrated diagnostic functions for valve monitoring • Automatic initialization of the position and process controller by means of TUNE-Function • Ultra dynamic actuating system without internal control air consumption. • Illuminated graphic display with touch screen • PROFIBUS DP-V1, EtherNet/IP, PROFINET, Modbus TCP, Bürkert system bus (büS) • Compact and robust design • Adaptation acc. to IEC 534-6 or VDI / VDE 3845 for lift and swivel drives or as remote version on Bürkert process valves **Customer benefits** • Quick and easy commissioning • Intuitive and simple operation via graphic display with backlight and touch keypad. • Guaranteed reliability and scheduled maintenance thanks to valve monitoring and diagnostics. • Easy maintenance and process monitoring • Long service life

Positioner SideControl Remote	
Positioner Type 8792 with Remote Sensor Type 8798 Actuator size Ø 70/90/130 mm	**Description**
	The intelligent digital position/process controller Type 8792 is designed for attachment to lift and swivel drives with standardization according to IEC 534-6 or VDI/VDE 3845 for demanding control tasks. The Type 8798 version with remote position sensor is used to control Bürkert process control valves. It is operated via a backlit graphic display. The initialization of process and positioner can be done automatically by means of TUNE-Function. **Features** • Illuminated graphic display with touch screen • Universal control system for single and double acting actuators • Ultra dynamic actuating system without internal control air consumption. • Integrated diagnostic functions for valve monitoring • PROFIBUS DP-V1, EtherNet/IP, PROFINET, Modbus TCP, Bürkert system bus (büS) • Compact and robust design • Adaptation acc. to IEC 534-6 or VDI / VDE 3845 for lift and swivel drives or as remote version on Bürkert process valves **Customer benefits** • Quick and easy commissioning • Intuitive and simple operation via backlit graphic display and touch keypad. • Guaranteed reliability and scheduled maintenance thanks to valve monitoring and diagnostics. • Long service life
Positioner SideControl BASIC Remote	
Positioner Type 8791 with Remote Sensor Type 8798 Actuator size Ø 70/90/130 mm	**Description**
	The positioner Type 8791 is designed for mounting on lift or swivel drives with standardization in accordance with IEC 534-6 or VDI/VDE 3845 designed for simple control tasks. The variant with the remote sensor Type 8798 is used to control Bürkert process control valves. All operating elements are located inside the housing. **Features** • Simple design • Universal control system for single and double acting actuators • Highly dynamic actuating system without internal control air consumption in the balanced state • Adaptation according to IEC 534-6 or VDI/VDE 3845 for lift and swivel drives or as remote version on Bürkert process valves • AS-Interface, IO-Link, Bürkert system bus (büS) (only for Positioner Type 8791 BASIC Remote) **Customer benefits** • Simple commissioning • Simple device for simple control tasks • Low energy consumption
Positioner IP20 Type 8791 with Remote Sensor Type 8798 Actuator size Ø 70/90/130 mm	
	

8. Networking and combination with other Bürkert products

The **angle seat valve, Type 2300,** can be combined with **process controller, Type 8693** or the positioner controller, **Type 8692/8694** to form the **Continuous ELEMENT valve system, Type 8801-YA**.

Note:

- For the configuration of further valve systems please use the **product enquiry form** at the end of this data sheet.
- You order two components and receive a completely assembled and tested valve.

Angle seat valve



Type 2300 threaded connection



Type 2300 welded connection



Type 2300 clamp connection

Positioner



Type 8692
Digital electropneumatic Positioner for the integrated mounting on process control valves

Process controller



Type 8693
Digital electropneumatic process controller for the integrated mounting on process control valves

Positioner



Type 8694
Digital electropneumatic positioner for the integrated mounting on process control valves

Valve system
Continuous ELEMENT



Type 8802-YG-I
ELEMENT continuous valve system



Type 8802-YG-J
ELEMENT continuous valve system



Type 8802-YG-L
ELEMENT continuous valve system

The **angle seat valve, Type 2300** can be combined with the **process controller, Type 8793,** the **positioner, Type 8792** or the **Top Control Basic, Type 8696** to form the **Continuous ELEMENT Type valve system 8802-YG**.

Note:

- For the configuration of further valve systems please use the **product enquiry form** at the end of this data sheet.
- You order two components and receive a completely assembled and tested valve.

Angle seat valve



Type 2300 threaded connection



Type 2300 welded connection



Type 2300 clamp connection

Positioner



Type 8792
Digital electropneumatic Positioner Side-Control

Process controller



Type 8793
Digital electropneumatic Process Controller SideControl

TopControl Basic



Type 8696
Digital electropneumatic positioner for the integrated mounting on process control valves

Valve system
Continuous ELEMENT



Type 8802-YG-P
ELEMENT continuous valve system



Type 8802-YG-Q
ELEMENT continuous valve system



Type 8802-YG-N
ELEMENT continuous valve system

9. Ordering information

9.1. Ordering chart threaded connection

Valves with flow direction below seat

Control function	Nominal diameter	Port connection thread	Actuator size Ø	K_{VS} value water	Operating pressure bis + 185 °C	Article no. Control cone	Leakage class	Article no. Control cone	Leakage class
	[mm]	[inch]	[mm]	[m³/h]	[bar]	PTFE		Stainless steel	
G-Thread									
CF: A, see control functions[1.)]	15	G ½	50(D)	5	16	213712	VI	213763	IV
		G ½	70(M)	5	25	213713	VI	213764	IV
	20	G ¾	70(M)	10	25	213715	VI	213766	IV
	25	G 1	70(M)	16	12	213718	VI	213768	IV
		G 1	90(N)(N)	16	25	245405	VI	229276	IV
	32	G 1¼	70(M)	23	6	213719	VI	213769	III
		G 1¼	90(N)	23	16	245406	VI	225395	IV
	40	G 1½	90(N)	34	12	213720	VI	213770	III
		G 1½	130(P)	36	25	223307	VI	223310	IV
	50	G 2	90(N)	49	7	203500	VI	206230	III
		G 2	130(P)	53	25 (20[2.)])	213697	VI	213708	IV
	65	G 2½	130(P)	90	16 (15[2.)])	239487	VI	239503	IV
CF: B, see control functions[1.)]	15	G ½	50(D)	5	See diagram[3.)]	213722	VI	223313	IV
		G ½	70(M)	5		213721	VI	223314	IV
	20	G ¾	70(M)	10		213724	VI	223316	IV
	25	G 1	70(M)	16		213726	VI	223318	III
	32	G 1¼	70(M)	23		213727	VI	223319	III
	40	G 1½	90(N)	34		213728	VI	223320	IV
	50	G 2	90(N)	49		203510	VI	223321	III
	65	G 2½	130(P)	90		239495	VI	239511	IV
NPT-Thread									
CF: A, see control functions[1.)]	15	NPT ½	50(D)	5	16	213729	VI	213771	IV
		NPT ½	70(M)	5	25	213730	VI	213772	IV
	20	NPT ¾	70(M)	10	25	213732	VI	213774	IV
	25	NPT 1	70(M)	16	12	213734	VI	213776	IV
		NPT 1	90(N)	16	25	465032	VI	464364	IV
	32	NPT 1¼	70(M)	23	6	213736	VI	213777	III
		NPT 1¼	90(N)	23	16	465033	VI	464365	IV
	40	NPT 1½	90(N)	34	12	213737	VI	213778	III
		NPT 1½	130(P)	36	25	223308	VI	223311	IV
	50	NPT 2	90(N)	49	7	203537	VI	206239	III
		NPT 2	130(P)	53	25 (20[2.)])	213699	VI	213709	IV
	65	NPT 2½	130(P)	90	16 (15[2.)])	239488	VI	239504	IV
CF: B, see control functions[1.)]	15	NPT ½	50(D)	5	See diagram[3.)]	213738	VI	223322	IV
		NPT ½	70(M)	5		213739	VI	223323	IV
	20	NPT ¾	70(M)	10		213741	VI	223325	IV
	25	NPT 1	70(M)	16		213743	VI	223327	III
	32	NPT 1¼	70(M)	23		213744	VI	223328	III
	40	NPT 1½	90(N)	34		213745	VI	223329	IV
	50	NPT 2	90(N)	49		203546	VI	223330	III
	65	NPT 2½	130(P)	90		239486	VI	239512	IV

1.) For more information, refer to the chapter "2. Circuit functions" on page 3.

2.) According to pressure equipment directive 97/23/EC for compressible fluids of group 1 (dangerous gases and vapours acc. to Article 3 point 1.3 letter a first indent)

3.) See diagram in chapter "Pilot pressure diagram with flow direction below seat (control function B)" on page 12.

Control function	Nominal diameter	Port connection thread	Actuator size Ø	K_{VS} value water	Operating pressure bis + 185 °C	Article no. Control cone	Leakage class	Article no. Control cone	Leakage class
	[mm]	[inch]	[mm]	[m³/h]	[bar]	PTFE		Stainless steel	
Rc-Thread									
CF: A, see control functions[1.)]	15	Rc ½	50(D)	5	16	213746	VI	213779	IV
		Rc ½	70(M)	5	25	213747	VI	213780	IV
	20	Rc ¾	70(M)	10	25	213749	VI	213782	IV
	25	Rc 1	70(M)	16	12	213751	VI	213784	IV
		Rc 1	90(N)	16	25	245407	VI	245438	IV
	32	Rc 1¼	70(M)	23	6	213752	VI	213785	III
		Rc 1¼	90(N)	23	16	245408	VI	245439	IV
	40	Rc 1½	90(N)	34	12	213753	VI	213786	III
		Rc 1½	130(P)	36	25	223309	VI	223312	IV
	50	Rc 2	90(N)	49	7	203555	VI	206249	III
		Rc 2	130(P)	53	25 (20[2.)])	213700	VI	213710	IV
	65	Rc 2½	130(P)	90	16 (15[2.)])	239489	VI	239506	IV
CF: B, see control functions[1.)]	15	Rc ½	50(D)	5	See diagram[3.)]	213755	VI	223331	IV
		Rc ½	70(M)	5		213756	VI	223332	IV
	20	Rc ¾	70(M)	10		213758	VI	223334	IV
	25	Rc 1	70(M)	16		213760	VI	223336	III
	32	Rc 1¼	70(M)	23		213761	VI	223337	III
	40	Rc 1½	90(N)	34		213762	VI	223338	IV
	50	Rc 2	90(N)	49		203564	VI	223339	III
	65	Rc 2½	130(P)	90		239497	VI	239513	IV

1.) For more information, refer to the chapter "2. Circuit functions" on page 3.

2.) According to pressure equipment directive 97/23/EC for compressible fluids of group 1 (dangerous gases and vapours acc. to Article 3 point 1.3 letter a first indent)

3.) See diagram in chapter "Pilot pressure diagram with flow direction below seat (control function B)" on page 12.

9.2. Ordering chart welded connection

Valves with flow direction below seat

Control function	Nominal diameter	Port connection thread	Actuator size Ø	K_{VS} value water	Operating pressure bis + 185 °C	Article no. Control cone	Leakage class	Article no. Control cone	Leakage class
	[mm]	[inch]	[mm]	[m³/h]	[bar]	PTFE		Stainless steel	
Welded connection acc. to EN ISO 1127									
CF: A, see control functions[1.)]	15	21.3 × 1.6	50(D)	5	16	203565	VI	206250	IV
		21.3 × 1.6	70(M)	5	25	203566	VI	206252	IV
	20	26.9 × 1.6	70(M)	10	25	203568	VI	206254	IV
	25	33.7 × 2	70(M)	16	12	203570	VI	206256	III
		33.7 × 2	90(N)	16	25	245395	VI	245403	IV
	32	42.4 × 2	70(M)	23	6	203571	VI	206257	III
		42.4 × 2	90(N)	23	16	204766	VI	245404	IV
	40	48.3 × 2	90(N)	34	12	203572	VI	206258	III
		48.3 × 2	130(P)	36	25	223299	VI	223306	IV
	50	60.3 × 2.0	90(N)	49	7	274669	VI	274670	III
		60.3 × 2.0	130(P)	53	25 (20[2.)])	274672	VI	274673	IV
	65	76.1 × 2.3	130(P)	90	16 (15[2.)])	239490	VI	217770	IV
CF: B, see control functions[1.)]	15	21.3 × 1.6	50(D)	5	See diagram[3.)]	203574	VI	223340	IV
		21.3 × 1.6	70(M)	5		203575	VI	223341	IV
	20	26.9 × 1.6	70(M)	10		203577	VI	223343	IV
	25	33.7 × 2	70(M)	16		203579	VI	223345	III
	32	42.4 × 2	70(M)	23		203580	VI	223346	III
	40	48.3 × 2	90(N)	34		203581	VI	223347	IV
	50	60.3 × 2.0	90(N)	49		274674	VI	274675	III
	65	76.1 × 2.3	130(P)	90		239498	VI	239515	IV
Welded connection acc. to DIN 11850 R2									
CF: A, see control functions[1.)]	15	19 × 1.5	50(D)	5	16	203583	VI	223349	IV
		19 × 1.5	70(M)	5	25	203584	VI	223350	IV
	20	23 × 1.5	70(M)	10	25	203586	VI	223352	IV
	25	29 × 1.5	70(M)	16	12	203588	VI	223354	III
		29 × 1.5	90(N)	16	25	245396	VI	245409	IV
	32	35 × 1.5	70(M)	23	6	203589	VI	223355	III
		35 × 1.5	90(N)	23	16	204767	VI	245410	IV
	40	41 × 1.5	90(N)	34	12	203590	VI	223356	III
		41 × 1.5	130(P)	36	25	223300	VI	223357	IV
	50	53 × 1.5	90(N)	49	7	203591	VI	223358	III
		53 × 1.5	130(P)	53	25 (20[2.)])	213702	VI	223359	IV
	65	70 × 2	130(P)	90	16 (15[2.)])	239491	VI	239507	IV
CF: B, see control functions[1.)]	15	19 × 1.5	50(D)	5	See diagram[3.)]	203592	VI	223360	IV
		19 × 1.5	70(M)	5		203593	VI	223361	IV
	20	23 × 1.5	70(M)	10		203595	VI	223363	IV
	25	29 × 1.5	70(M)	16		203597	VI	223365	III
	32	35 × 1.5	70(M)	23		203598	VI	223366	III
	40	41 × 1.5	90(N)	34		203599	VI	223367	IV
	50	53 × 1.5	90(N)	49		203600	VI	223368	III
	65	70 × 2	130(P)	90		239499	VI	239516	IV

1.) For more information, refer to the chapter "2. Circuit functions" on page 3.

2.) According to pressure equipment directive 97/23/EC for compressible fluids of group 1 (dangerous gases and vapours acc. to Article 3 point 1.3 letter a first indent)

3.) See diagram in chapter "Pilot pressure diagram with flow direction below seat (control function B)" on page 12.

Control function	Nominal diameter	Port connection thread	Actuator size Ø	K_{VS} value water	Operating pressure bis + 185 °C	Article no. Control cone	Leakage class	Article no. Control cone	Leakage class
	[mm]	[inch]	[mm]	[m³/h]	[bar]	PTFE		Stainless steel	
Welded connection acc. to ASME BPE									
CF: A, see control functions[1.)]	15	12.7 × 1.65	50(D)	5	16	203601	VI	223369	IV
		12.7 × 1.65	70(M)	5	25	203602	VI	223370	IV
	20	19.05 × 1.65	70(M)	10	25	203604	VI	223372	IV
	25	25.4 × 1.65	70(M)	16	12	203606	VI	223374	III
		25.4 × 1.65	90(N)	16	25	245397	VI	464366	IV
	40	38.1 × 1.65	90(N)	34	12	203607	VI	212906	III
		38.1 × 1.65	130(P)	36	25	223303	VI	223376	IV
	50	50.8 × 1.65	90(N)	49	7	203608	VI	223377	III
		50.8 × 1.65	130(P)	53	25 (20[2.)])	213703	VI	223378	IV
	65	63.5 × 1.65	130(P)	90	16 (15[2.)])	239492	VI	239508	IV
CF: B, see control functions[1.)]	15	12.7 × 1.65	50(D)	5	See diagram[3.)]	203609	VI	223379	IV
		12.7 × 1.65	70(M)	5		203610	VI	223380	IV
	20	19.05 × 1.65	70(M)	10		203612	VI	223382	IV
	25	25.4 × 1.65	70(M)	16		203614	VI	223384	III
	40	38.1 × 1.65	90(N)	34		203615	VI	223385	IV
	50	50.8 × 1.65	90(N)	49		203616	VI	223386	III
	65	63.5 × 1.65	130(P)	90		239500	VI	239517	IV
Welded connection acc. to SMS 3008									
CF: A, see control functions[1.)]	15	12 × 1.0	50(D)	5	16	203617	VI	223387	IV
		12 × 1.0	70(M)	5	25	203618	VI	223388	IV
	20	18 × 1.0	70(M)	10	25	203620	VI	223390	IV
	25	25 × 1.2	70(M)	16	12	203622	VI	223392	III
		25 × 1.2	90(N)	16	25	245398	VI	245412	IV
	40	38 × 1.2	90(N)	34	12	203623	VI	223393	III
		38 × 1.2	130(P)	36	25	223302	VI	223394	IV
	50	51 × 1.2	90(N)	49	7	203624	VI	223395	III
		51 × 1.2	130(P)	53	25 (20[2.)])	213704	VI	223396	IV
	65	63.5 × 1.65	130(P)	90	16 (15[2.)])	239493	VI	239509	IV
CF: B, see control functions[1.)]	15	12 × 1.0	50(D)	5	See diagram[3.)]	203625	VI	223397	IV
		12 × 1.0	70(M)	5		203626	VI	223398	IV
	20	18 × 1.0	70(M)	10		203628	VI	223400	IV
	25	25 × 1.2	70(M)	16		203630	VI	223402	III
	40	38 × 1.2	90(N)	34		203631	VI	223403	IV
	50	51 × 1.2	90(N)	49		203632	VI	223404	III
	65	63.5 × 1.65	130(P)	90		239501	VI	239518	IV

1.) For more information, refer to the chapter "2. Circuit functions" on page 3.

2.) According to pressure equipment directive 97/23/EC for compressible fluids of group 1 (dangerous gases and vapours acc. to Article 3 point 1.3 letter a first indent)

3.) See diagram in chapter "Pilot pressure diagram with flow direction below seat (control function B)" on page 12.

9.3. Ordering chart clamp connection

Valves with flow direction below seat

Control function	Nominal diameter	Port connection thread	Actuator size Ø	K_{VS} value water	Operating pressure bis + 185 °C	Article no. Control cone	Leakage class	Article no. Control cone	Leakage class
	[mm]	[inch]	[mm]	[m³/h]	[bar]	PTFE		Stainless steel	
Clamp acc. to ISO 2852									
CF: A, see control functions[1.)]	15	34.0	50(D)	5	16	203649	VI	223423	IV
		34.0	70(M)	5	25	203650	VI	223424	IV
	20	50.5	70(M)	10	25	203652	VI	223426	IV
	25	50.5	70(M)	16	12	203654	VI	223428	III
		50.5	90(N)	16	25	245401	VI	245414	IV
	32	50.5	70(M)	23	6	203655	VI	223429	III
		50.5	90(N)	23	16	204768	VI	245415	IV
	40	64.0	90(N)	34	12	203656	VI	223430	III
		64.0	130(P)	36	25	223304	VI	223431	IV
	50	77.5	90(N)	49	7	203657	VI	223433	III
		77.5	130(P)	53	25 (20[2.)])	213706	VI	223434	IV
CF: B, see control functions[1.)]	15	34.0	50(D)	5	See diagram[2.)]	203658	VI	223435	IV
		34.0	70(M)	5		203659	VI	223436	IV
	20	50.5	70(M)	10		203661	VI	223438	IV
	25	50.5	70(M)	16		203663	VI	223440	III
	32	50.5	70(M)	23		203664	VI	223441	III
	40	64.0	90(N)	34		203665	VI	223442	IV
	50	77.5	90(N)	49		203666	VI	223443	III
Clamp acc. to ASME BPE									
CF: A, see control functions[1.)]	15	25.0	50(D)	5	16	203667	VI	223444	IV
		25.0	70(M)	5	25	203668	VI	223445	IV
	20	25.0	70(M)	10	25	203670	VI	223447	IV
	25	50.5	70(M)	16	12	203672	VI	223449	III
		50.5	90(N)	16	25	245402	VI	245416	IV
	40	50.5	90(N)	34	12	203673	VI	223450	III
		50.5	130(P)	36	25	223305	VI	223451	IV
	50	64.0	90(N)	49	7	203674	VI	223452	III
		64.0	130(P)	53	25 (20[2.)])	213707	VI	223453	IV
CF: B, see control functions[1.)]	15	25.0	50(D)	5	See diagram[2.)]	203675	VI	223454	III
		25.0	70(M)	5		203677	VI	223455	IV
	20	25.0	70(M)	10		203679	VI	223457	IV
	25	50.5	70(M)	16		203681	VI	223459	III
	40	50.5	90(N)	34		203682	VI	223460	IV
	50	64.0	90(N)	49		203683	VI	223461	III

1.) For more information, refer to the chapter "2. Circuit functions" on page3.

2.) See diagram in chapter "Pilot pressure diagram with flow direction below seat (control function B)" on page 12.

Further versions on request

Process connection Clamp acc. to DIN 32676, BS4825	**Circuit function** B (normally open) and I (double-acting)