SIEMENS

SITRANS F

Electromagnetic flowmeters SITRANS FM MAG8000 Battery-operated water meter

Operating Instructions

Introduction 1
Safety notes 2
Description 3
Installing/Mounting 4
Connecting 5
Commissioning 6
Operating 7
Service and maintenance 8
Diagnostics and Troubleshooting 9
Technical specifications 10
Dimension drawings 11
Product documentation and support A
Spare parts/Accessories B
Flow Tool C
Qualification certificate D
Unit conversion table E
Parameter lists F
Sizing sensor G
Features H

7ME681. MAG8000
7ME682. MAG8000CT

FLUXER

03/2025
A5E03071515-AM

Legal information

Warning notice system

This manual contains notices you have to observe in order to ensure your personal safety, as well as to prevent damage to property. The notices referring to your personal safety are highlighted in the manual by a safety alert symbol, notices referring only to property damage have no safety alert symbol. These notices shown below are graded according to the degree of danger.

⚠ DANGER

indicates that death or severe personal injury **will** result if proper precautions are not taken.

⚠ WARNING

indicates that death or severe personal injury **may** result if proper precautions are not taken.

⚠ CAUTION

indicates that minor personal injury can result if proper precautions are not taken.

NOTICE

indicates that property damage can result if proper precautions are not taken.

If more than one degree of danger is present, the warning notice representing the highest degree of danger will be used. A notice warning of injury to persons with a safety alert symbol may also include a warning relating to property damage.

Qualified Personnel

The product/system described in this documentation may be operated only by **personnel qualified** for the specific task in accordance with the relevant documentation, in particular its warning notices and safety instructions. Qualified personnel are those who, based on their training and experience, are capable of identifying risks and avoiding potential hazards when working with these products/systems.

Proper use of Siemens products

Note the following:

⚠ WARNING

Siemens products may only be used for the applications described in the catalog and in the relevant technical documentation. If products and components from other manufacturers are used, these must be recommended or approved by Siemens. Proper transport, storage, installation, assembly, commissioning, operation and maintenance are required to ensure that the products operate safely and without any problems. The permissible ambient conditions must be complied with. The information in the relevant documentation must be observed.

Trademarks

All names identified by ® are registered trademarks of Siemens Aktiengesellschaft. The remaining trademarks in this publication may be trademarks whose use by third parties for their own purposes could violate the rights of the owner.

Disclaimer of Liability

We have reviewed the contents of this publication to ensure consistency with the hardware and software described. Since variance cannot be precluded entirely, we cannot guarantee full consistency. However, the information in this publication is reviewed regularly and any necessary corrections are included in subsequent editions.

Siemens Aktiengesellschaft
Digital Industries
Postfach 48 48
90026 NÜRNBERG
GERMANY

Document order number: A5E03071515
Ⓟ 04/2025 Subject to change

Copyright © Siemens 2022 - 2025.
All rights reserved

Table of contents

1 Introduction 7

1.1 Purpose of this documentation 7

1.2 Document history 7

1.3 Checking the consignment 7

1.4 Items supplied 8

1.5 Security information 8

1.6 Transportation and storage 9

1.7 Notes on warranty 9

2 Safety notes 11

2.1 General safety instructions 11

2.2 Laws and directives 11

2.3 Conformity with European directives 11

2.4 Lithium batteries 12

3 Description 13

3.1 System components 13

3.2 Operating principle 13

3.3 Design 13

3.4 Benefits 15

4 Installing/Mounting 17

4.1 Sensor installation 18
4.1.1 Locating the sensor 18
4.1.2 Orienting the sensor 20
4.1.3 Mounting the sensor 22

4.2 Potential equalization 26

4.3 Grounding 27

4.4 Cathodic-protected pipes 29

4.5 Potting and direct burial 30

4.6 Transmitter installation 31

4.7 MAG 8000 CT 33
4.7.1 Sealing of MAG 8000 CT 33
4.7.1.1 Verification sealing 33
4.7.1.2 User sealing 33
4.7.2 Installation conditions 34
4.7.2.1 MID option (MI-001) 34

5 Connecting 35
5.1 General safety requirements 36
5.2 Remote version 37
5.3 Power supply 38
5.4 Outputs 40
5.5 Communication modules 41
5.6 Connection of add-on modules 44
6 Commissioning 45
6.1 Overview SIMATIC PDM 45
6.2 Initial commissioning via SIMATIC PDM 46
6.2.1 Check SIMATIC PDM version 46
6.2.2 Updating the Electronic Device Description (EDD) or Field Device Integration (FDI) 46
6.2.3 Configuring the device 48
6.3 Setting the basic parameters 53
6.4 Unit selection 58
6.5 Output configuration 58
6.6 Data protection 59
7 Operating 61
7.1 Operation via key and display 61
7.2 Display symbols 62
7.3 Default display information and accessible display menus 63
7.4 Operator menu 66
7.5 Internal data handling 72
7.6 Battery-powered operation 73
8 Service and maintenance 79
8.1 Maintenance 79
8.2 MAG 8000 service guidelines 79
8.3 Replacing transmitter or PCB board 80
8.4 Battery replacement 80
8.5 Power up with battery reset, date and time set up 83
8.6 Verification mode 84
8.7 Transport 85
8.8 Return procedure 85
8.9 Disposal 86
8.9.1 Battery disposal 86

9 Diagnostics and Troubleshooting 87
9.1 Fault codes 87
9.2 Built-in functions 89
9.3 Flow simulation 91
10 Technical specifications 93
10.1 MAG 8000 water meter 93
10.2 Sensor 94
10.3 Transmitter 95
10.4 Power supply 97
10.5 Modbus RTU 98
10.6 Output characteristics 99
10.7 Meter uncertainty 104
10.8 FM Fire Service applications (MAG 8000 and MAG 8000 CT) 105
10.9 MAG 8000 CT (7ME6820) (Revenue program) water meter type approval 106
10.10 MAG 8000 CT (7ME6820) (Revenue program) MID option (MI-001) 106
10.11 The effect of temperature MAG 8000 (7ME6810) and MAG 8000 CT (7ME6820) 109
11 Dimension drawings 111
A Product documentation and support 119
A.1 Product documentation 119
A.2 Technical support 120
B Spare parts/Accessories 121
B.1 Ordering of spare parts 121
C Flow Tool 123
C.1 Flow Tool 123
C.2 Initial commissioning via Flow Tool 123
C.3 Configuring the device 124
C.4 Setting the basic parameters 126
C.5 Unit selection 130
C.6 Output configuration 133
C.7 Default display information and accessible display menus 134
C.8 Internal data handling 135
C.9 Battery configuration 136
D Qualification certificate 139
D.1 Commissioning 139
D.2 Enabling insulation test 140

D.3 Uploading the device data to the pc 141
D.4 Generating the qualification certificate 142
D.5 Result evaluation 144
E Unit conversion table 145
F Parameter lists 147
F.1 1-99 147
F.2 100-199 148
F.3 200-299 149
F.4 300-399 153
F.5 400-499 156
F.6 500-599 157
F.7 600-799 159
F.8 800-899 164
G Sizing sensor 169
G.1 Sizing table DN 25 to 1200 (1" to 48") 169
H Features 171
Index 177

Introduction

1

1.1 Purpose of this documentation

These instructions contain all information required to commission and use the device. Read the instructions carefully prior to installation and commissioning. In order to use the device correctly, first review its principle of operation.

The instructions are aimed at persons mechanically installing, connecting and commissioning the device, as well as service and maintenance engineers.

1.2 Document history

The contents of these instructions are regularly reviewed and corrections are included in subsequent editions. We welcome all suggestions for improvement.

The following table shows the most important changes in the documentation compared to each previous edition.

Edition	Remarks
03/2025	• MAG8000 CT type approval update • Additional information for grounding, installation in cabinets
04/2022	• Update for software version 3.13/device revision 16
10/2021	• Correction of torque values
09/2021	• Update for software version 3.12
03/2020	• Corrections regarding pulse B output
02/2020	• Update for software version 3.11/device revision 15
07/2019	• MAG 8000 Irrigation discontinued and removed
11/2018	• Update for software version 3.09 • Technical data and Appendix C.2 updated
05/2014	• NMI M 10 approval for MAG 8000 Irrigation
10/2012	• Primary operation software changed from Flow Tool to PDM (Flow Tool moved to appendix) • Qualification Certificate functionality added
03/2010	• Integration of MAG 8000 for irrigation applications • Restructuring of the document

1.3 Checking the consignment

1. Check the packaging and the delivered items for visible damages.
2. Report any claims for damages immediately to the shipping company.

3. Retain damaged parts for clarification.
4. Check the scope of delivery by comparing your order to the shipping documents for correctness and completeness.

⚠ **WARNING**
Using a damaged or incomplete device Risk of explosion in hazardous areas. • Do not use damaged or incomplete devices.

1.4 Items supplied

- SITRANS F M MAG 8000 Standard, MAG 8000 CT
- Siemens Process Instrumentation documentation disk containing certificates, and manuals

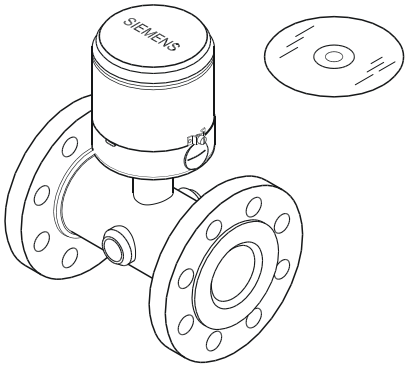

Note

Scope of delivery may vary, depending on version and add-ons. Make sure the scope of delivery and the information on the nameplate correspond to your order and the delivery note.

1.5 Security information

Siemens provides products and solutions with industrial security functions that support the secure operation of plants, systems, machines and networks.

In order to protect plants, systems, machines and networks against cyber threats, it is necessary to implement – and continuously maintain – a holistic, state-of-the-art industrial security concept. Siemens' products and solutions constitute one element of such a concept.

Customers are responsible for preventing unauthorized access to their plants, systems, machines and networks. Such systems, machines and components should only be connected to an enterprise network or the internet if and to the extent such a connection is necessary and only when appropriate security measures (e.g. firewalls and/or network segmentation) are in place.

For additional information on industrial security measures that may be implemented, please visit
https://www.siemens.com/industrialsecurity.

Siemens' products and solutions undergo continuous development to make them more secure. Siemens strongly recommends that product updates are applied as soon as they are available and that the latest product versions are used. Use of product versions that are no longer supported, and failure to apply the latest updates may increase customer's exposure to cyber threats.

To stay informed about product updates, subscribe to the Siemens Industrial Security RSS Feed under
https://www.siemens.com/cert.

1.6 Transportation and storage

To guarantee sufficient protection during transport and storage, observe the following:

- Keep the original packaging for subsequent transportation.
- Devices/replacement parts should be returned in their original packaging.
- If the original packaging is no longer available, ensure that all shipments are properly packaged to provide sufficient protection during transport. Siemens cannot assume liability for any costs associated with transportation damages.

NOTICE
Insufficient protection during storage The packaging only provides limited protection against moisture and infiltration. • Provide additional packaging as necessary.

Special conditions for storage and transportation of the device are listed in Technical specifications (Page 93).

1.7 Notes on warranty

The contents of this manual shall not become part of or modify any prior or existing agreement, commitment or legal relationship. The sales contract contains all obligations on the part of Siemens as well as the complete and solely applicable warranty conditions. Any statements regarding device versions described in the manual do not create new warranties or modify the existing warranty.

The content reflects the technical status at the time of publishing. Siemens reserves the right to make technical changes in the course of further development.

Safety notes

2

2.1 General safety instructions

⚠ CAUTION
Correct, reliable operation of the product requires proper transport, storage, positioning and assembly as well as careful operation and maintenance. Only qualified personnel should install or operate this instrument.

Note

Alterations to the product, including opening or improper modifications of the product are not permitted.

If this requirement is not observed, the CE mark and the manufacturer's warranty will expire.

If the equipment is used in a manner not specified by the manufacturer, the protection provided by the equipment may be impaired.

2.2 Laws and directives

Observe the safety rules, provisions and laws applicable in your country during connection, assembly and operation. These include, for example:

- National Electrical Code (NEC - NFPA 70) (USA)
- Canadian Electrical Code (CEC Part I) (Canada)

Further provisions for hazardous area applications are for example:

- IEC 60079-14 (international)
- EN 60079-14 (EU and UK)

2.3 Conformity with European directives

The CE marking on the device symbolizes the conformity with the following European directives:

Electromagnetic compatibility EMC 2014/30/EU	Directive of the European Parliament and of the Council on the harmonisation of the laws of the Member States relating to electromagnetic compatibility
Low voltage directive LVD 2014/35/EU	Directive of the European Parliament and of the Council on the harmonisation of the laws of the Member States relating to the making available on the market of electrical equipment designed for use within certain voltage limits

Pressure equipment directive PED 2014/68/EU	Directive of the European Parliament and of the Council on the harmonisation of the laws of the Member States relating to the making available on the market of pressure equipment
RED 2014/53/EU	Directive of the European Parliament and of the Council on the harmonisation of the laws of the Member States relating to the making available on the market of radio equipment and repealing Directive 1999/5/EC
Measuring instruments directive MID 2014/32/EU	Directive of the European Parliament and the Council on the harmonisation of the laws of the Member States relating to the making available on the market of measuring instruments
2011/65/EU RoHS	Directive of the European Parliament and the Council on the restriction of the use of certain hazardous substances in electrical and electronic equipment

The applicable directives can be found in the EU declaration of conformity of the specific device.

2.4 Lithium batteries

Lithium batteries are primary power sources with high energy content designed to provide the highest possible degree of safety.

⚠ WARNING

Potential hazard

Lithium batteries may present a potential hazard if they are abused electrically or mechanically. Observe the following precautions when handling and using lithium batteries:

- Do not short-circuit.
- Do not recharge.
- Do not expose to temperatures beyond the specified temperature range.
- Do not incinerate.
- Do not crush, puncture or open cells or disassemble.
- Do not weld or solder to the battery's body and electrical contacts.
- Do not expose contents to water.

This device is not approved for use in hazardous areas.

Description

3

3.1 System components

A SITRANS F M MAG 8000 water meter system includes:

- A transmitter and a sensor. The transmitter is either compact mounted (integral) or remote mounted at a distance of maximum 30 m (100 ft).
- An internally or externally mounted battery supply or 115 to 230 V AC or 12/24 V AC/DC power supply with battery backup.

Communication solutions

The following communication modules are available:

- RS 232/RS 485 Modbus RTU
- Encoder interface for AMR solutions
- 3G/UMTS module
- 4G/LTE module

3.2 Operating principle

MAG 8000 is a microprocessor-based water meter with graphical display and key for optimum customer operation and information on site. The transmitter drives the magnetic field in the sensor, evaluates the flow signal from the sensor, and calculates the volume passing through. Its intelligent functionality, information and diagnostics ensure optimum meter performance and information to optimize water supply and billing.

MAG 8000 Standard and MAG 8000 CT can be ordered as a Basic or an Advanced version.

3.3 Design

MAG 8000 is a battery-supplied magnetic inductive water meter for revenue, district metering application.



Figure 3-1 MAG 8000 product program

Compact



Figure 3-2 MAG 8000 Standard compact

Remote



Figure 3-3 MAG 8000 Standard remote

Custody transfer

Compact and remote versions.



Figure 3-4 MAG 8000 CT (compact version)

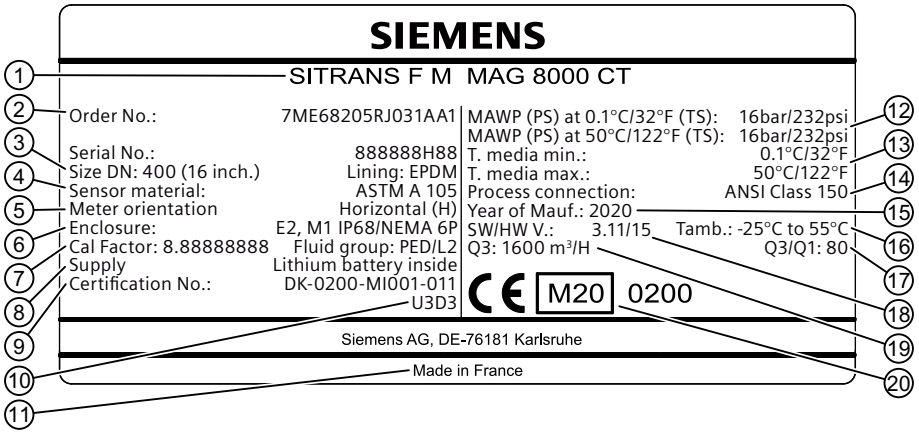

①	Product name	⑪	Manufacturer and place of manufacture
②	Article number and serial number	⑫	Maximum allowable working pressures
③	Size and liner type	⑬	Process media temperature
④	Sensor material	⑭	Process connection
⑤	Permitted meter orientation	⑮	Manufacturing year
⑥	Degree of protection	⑯	Permitted ambient temperature
⑦	Calibration factor and fluid group	⑰	Dynamic range
⑧	Power supply	⑱	Software version and hardware version
⑨	Certification number	⑲	Maximum flow rate
⑩	Sensitivity class	⑳	Conformity with country-specific directives

Figure 3-5 MAG 8000 CT nameplate example

3.4 Benefits

- Simple placement of the meter - bury the meter underground or in a floating chamber. The IP 68 (NEMA 6P) design is unaffected by meter position or in-line piping stresses, and there is no requirement for filters.
- Minimal pressure loss - an unrestricted flow tube ensures minimal pressure loss, even at the highest flow rates. Overall network system pressures can be reduced, helping to prevent leakage from burst pipes ánd excess stress placed on pumping stations. This also saves energy.
- Zero maintenance - designed without moving parts and a battery lifetime of up to 15 years.
- Measurement in both directions - only one meter required for measuring in both direction.
- Intelligent meter - only one meter for leak detection, data logger function, and self-detection of errors.

Installing/Mounting

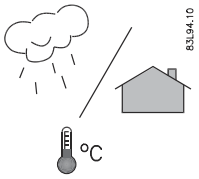

MAG 8000 water meters are suitable for indoor and outdoor installations.

- Make sure that pressure and temperature specifications indicated on the device nameplate / label are not exceeded.

General information

This chapter describes how to install the water meter in the compact version as well as in the remote version.

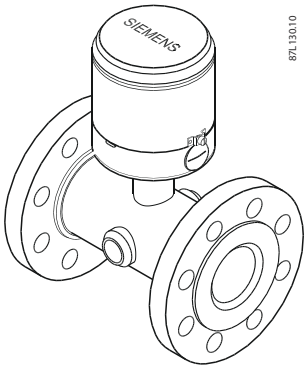

Figure 4-1 Compact installation

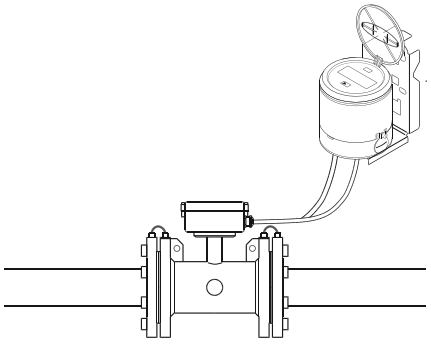

Figure 4-2 Remote installation

The installation consists of two steps:

1. Sensor installation.
2. Transmitter installation (remote version only).

4.1 Sensor installation

The sensor installation consists of three steps:

1. Locating the sensor (Page 18).
2. Orienting the sensor (Page 20).
3. Mounting the sensor (Page 22).

4.1.1 Locating the sensor

Ensure that the sensor is located in the most optimum place and no magnetic fields are present.

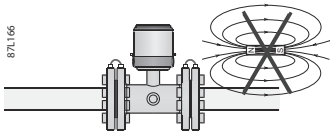

Flow direction

Ensure that sensor is mounted in correct flow direction as indicated on label.

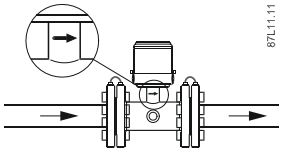

If process flow direction is opposite of flow direction indicated on sensor label, forward flow rates can be restored via parameter 327, if factor is adjusted to "-1".

MAG 8000 CT is approved for bidirectional measurement for class 2 OIML R49.

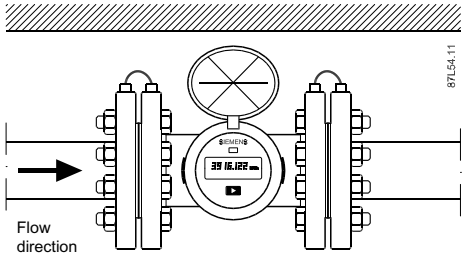

Inlet and outlet condition

To achieve most accurate flow measurement it is essential to have certain straight inlet and outlet pipe lengths as shown (D_i: sensor diameter).

MAG 8000 CT is approved with OIML R49:2013 and MID for the following installations:

- DN 50 to DN 300 with 0x D_i of straight pipe upstream to the sensor and 0x D_i of straight pipe downstream from the sensor.
- DN 350 to DN 600 with 3x D_i of straight pipe upstream to the sensor and 3x D_i of straight pipe downstream from the sensor.

For optimal measurement performance, it is recommended to follow the installation guidelines for the MAG 8000 standard water meter.

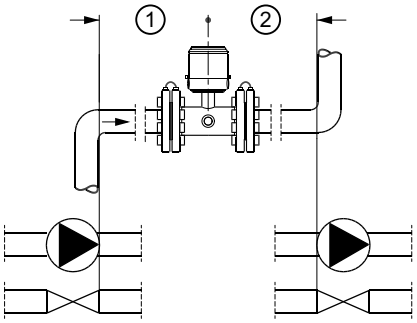

	MAG 8000 (recommended)	**MAG 8000 CT DN 50 to DN 300**	**MAG 8000 CT DN 350 to DN 600**
① Minimum straight inlet pipe length	5x D_i	0x D_i	3x D_i
② Minimum straight outlet pipe length	3x D_i	0x D_i	3x D_i

Sensor must be completely full of liquid

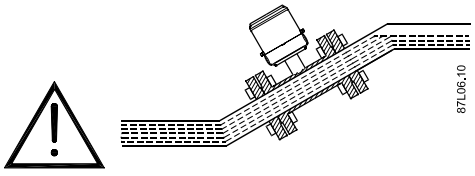

Therefore avoid:

- Air in pipe.
- Installation at the highest point in pipe system.
- Installation in vertical pipes with free outlet.

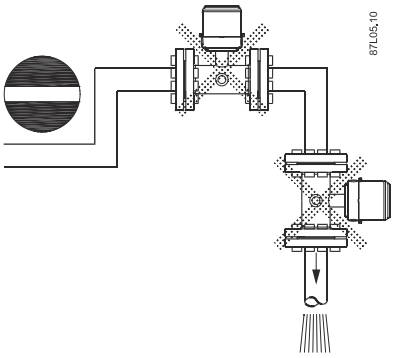

Partially filled pipes

For partially filled pipes or pipes with downwards flow and free outlet, sensor must be mounted in a U-tube.

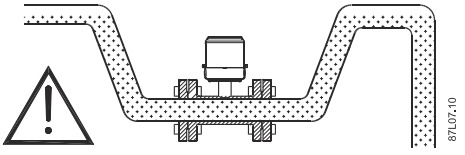

4.1.2 Orienting the sensor

MAG 8000 CT with OIML R49:2013 and MID approval DN 50 to DN 600 can only be installed horizontally.

Horizontal pipes

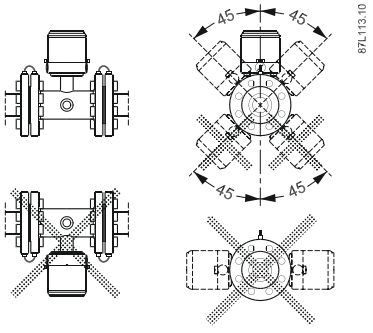

Sensor must be mounted as shown in upper part of figure. Do not mount sensor as shown in lower part of figure as electrodes then will be positioned at top where air bubbles may occur and in bottom, where mud, sludge, sand etc. may deposit and cover the electrode, thus impacting the measurement.

If "Empty Pipe Detection" is used, sensor should be tilted 45° as shown in upper right figure to maximize full pipe detection and provide accurate volume calculations.

Note

Physical installation of battery pack may influence battery capacity. Optimal battery capacity is achieved with battery pack in an upright position. Installation examples marked with dotted cross will affect battery capacity.

Vertical pipes (MAG 8000)

Recommended installation is in a vertical/inclined pipe to minimize wear and deposits in sensor.

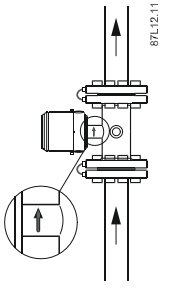

Installation in large pipes (MAG 8000)

The water meter can be installed between two reducers (e.g. DIN 28545).

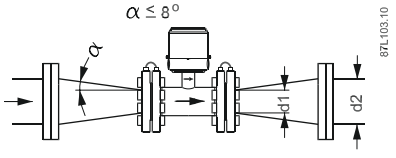

With an 8° reducer, the following pressure drop curve applies. The curves are applicable to water.

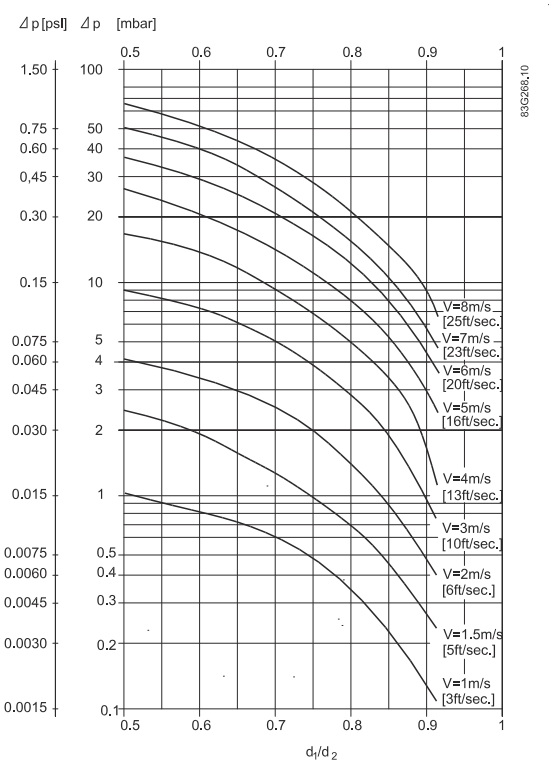

Example:

A flow velocity of 3 m/s (10 ft./sec.) (V) in a sensor with a diameter reduction from DN 100 to DN 80 (4" to 3") (d_1/d_2 = 0.8) gives a pressure drop of 2.9 mbar (0.04 psi).

4.1.3 Mounting the sensor

1. Install gaskets.
2. Ensure connection flange has a smooth surface and is in line with sensor.

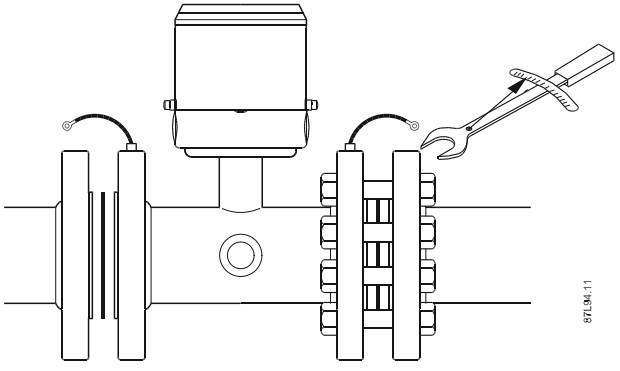

Gaskets are recommended but not included in water meter delivery.

Advice for gasket selection:

- Only use flat rubber gaskets.
- Thickness 1 to 6 mm (0.0 to 0.02 ft) dependent on gap/tolerance.
- Inner diameter must be larger than bore of water meter.
- Material should be compatible with process fluid.
- Hardness should be maximum 75 Shore A.

Transporting

WARNING

Lifting the sensor

Do **NOT** lift the sensor by the terminal box. Do **NOT** use a forklift. If available lift the sensor by the lifting eyes fitted to the device. Otherwise lift the sensor by the process connections.

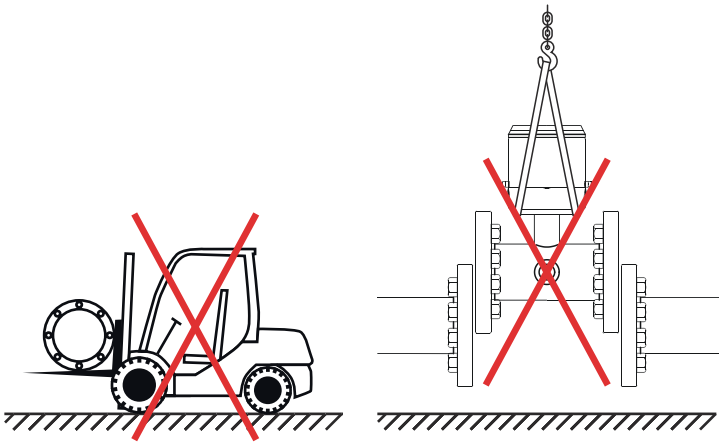

Figure 4-3 Incorrect transportation

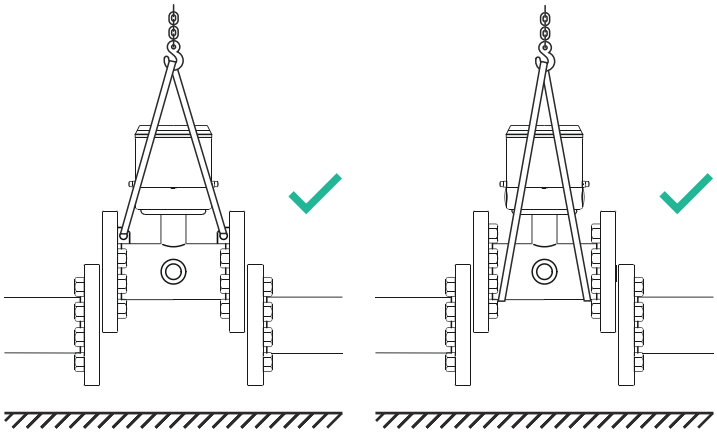

Figure 4-4 Correct transportation

Vibrations

In installations with strong vibrations remote installation of the transmitter is recommended. Alternatively mitigate vibrations by installing pipe support in close proximity to the water meter.

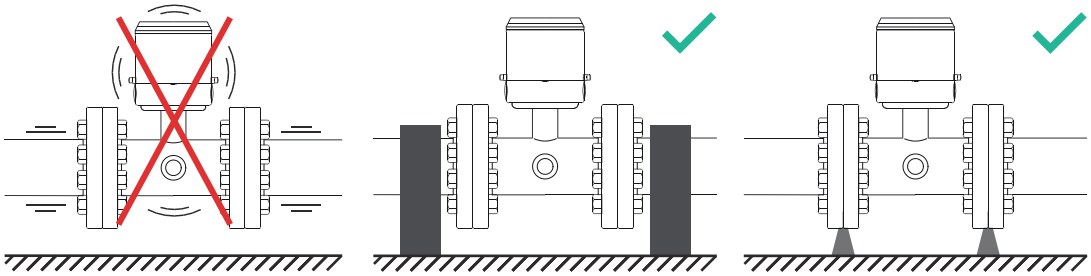

Figure 4-5 Vibration mitigation

Maximum allowable torques

Standard bolts must be well lubricated and tightened evenly around gasket.

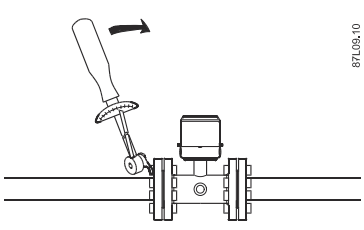

Leakage/damage to water meter or piping may arise if bolts are overtightened.

Torque calculations

All values are theoretical and are calculated on the assumption that:

- All bolts are new and material selection is according to EN 1515-1 table 2.
- Gasket material not exceeding 75 shore A is used between the water meter and mating flanges.
- All bolts are galvanized and adequately lubricated.
- Flanges are made of carbon steel.
- Water meter and mating flanges are correctly aligned.

Table 4-1 Minimum and maximum torques for 7ME6810 and 7ME6820, EN 1092-1 in Nm

Nominal size		**EN 1092-1**							
		PN 10		**PN 16**		**PN 25**		**PN 40**	
Liner		**EPDM**		**EPDM**		**EPDM**		**EPDM**	
mm	**inch**	**Min.**	**Max.**	**Min.**	**Max.**	**Min.**	**Max.**	**Min.**	**Max.**
25	1	-	-	-	-	-	-	6.9	7
40	1 ½	-	-	-	-	-	-	15.0	16
50	2	-	-	9.2	10	-	-	-	-

Nominal size		EN 1092-1							
		PN 10		PN 16		PN 25		PN 40	
Liner		EPDM		EPDM		EPDM		EPDM	
mm	inch	Min.	Max.	Min.	Max.	Min.	Max.	Min.	Max.
65	2 ½	-	-	6.7	7	-	-	-	-
80	3	-	-	8.2	9	-	-	-	-
100	4	-	-	11.6	12	-	-	-	-
125	5	-	-	16.4	17	-	-	-	-
150	6	-	-	26.8	28	-	-	-	-
200	8	26.1	27	27.9	29	-	-	-	-
250	10	25.5	27	48.8	51	-	-	-	-
300	12	34.0	36	65.1	68	-	-	-	-
350	14	33.7	35	67.0	70	138.6	146	257.4	270
400	16	50.7	53	94.3	99	189.9	199	373.4	392
450	18	49.4	52	95.1	100	183.5	193	327.5	344
500	20	59.8	63	130.6	137	225.4	237	426.1	447
600	24	92.3	97	200.6	211	338.6	356	702.2	737
700	28	104.9	110	201.0	211	-	-	-	-
750	30	-	-	-	-	-	-	-	-
800	32	149.8	157	282.3	296	-	-	-	-
900	36	158.4	166	298.8	314	-	-	-	-
1000	40	210.1	221	400.6	421	-	-	-	-
1050	42	-	-	-	-	-	-	-	-
1100	44	-	-	-	-	-	-	-	-
1200	48	289.1	304	575.4	604	-	-	-	-

Table 4-2 Minimum and maximum torques for 7ME6810 and 7ME6820, ANSI B16.5, AWWA C-207 and AS 4087 in Nm

Nominal size		ANSI B16.5		AWWA C-207		AS 4087	
		Class 150		Class D		PN 16	
Liner		EPDM		EPDM		EPDM	
mm	inch	Min.	Max.	Min.	Max.	Min.	Max.
25	1	7.8	8	-	-	-	-
40	1 ½	12.9	14	-	-	-	-
50	2	11.9	13	-	-	7.5	8
65	2 ½	17.2	18	-	-	13.3	14
80	3	21.2	22	-	-	16.4	17
100	4	15.0	16	-	-	23.2	24
125	5	25.0	26	-	-	-	-
150	6	32.8	34	-	-	21.6	23
200	8	51.1	54	-	-	33.6	35
250	10	56.0	59	-	-	61.2	64
300	12	74.7	78	-	-	54.4	57

Nominal size		ANSI B16.5		AWWA C-207		AS 4087	
		Class 150		Class D		PN 16	
Liner		EPDM		EPDM		EPDM	
mm	inch	Min.	Max.	Min.	Max.	Min.	Max.
350	14	103.7	109	-	-	89.3	94
400	16	100.8	106	-	-	111.4	117
450	18	145.9	153	-	-	141.9	149
500	20	140.1	147	-	-	129.6	136
600	24	216.4	227	-	-	203.9	214
700	28	-	-	116.9	123	206.0	216
750	30	-	-	131.7	138	-	-
800	32	-	-	178.3	187	338.8	356
900	36	-	-	194.1	204	350.8	368
1000	40	-	-	212.3	223	408.5	429
1050	42	-	-	233.7	245	-	-
1100	44	-	-	230.7	242	-	-
1200	48	-	-	246.8	259	446.7	469

4.2 Potential equalization

Liquid potential equalization or grounding is accomplished with built-in grounding electrodes and/or grounding rings. The electrodes ensure electrical connection between liquid and meter providing a stable and accurate measurement.

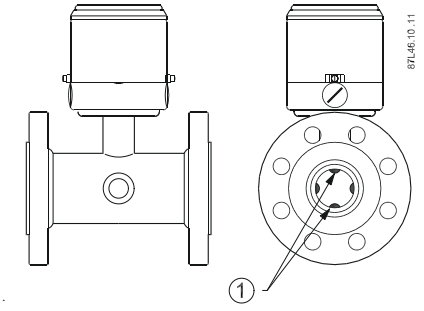

① Built-in grounding electrode (7ME6810 and 7ME6820)

4.3 Grounding

The sensor body must be grounded using grounding/bonding straps and/or grounding rings to protect flow signal against stray electrical noise and/or lightning. This ensures that noise is carried through sensor body and that the measuring area within sensor body is noise-free.

Note

Grounding connector rotated

For sensor sizes between DN 25 (1") and DN 300 (12"), the grounding connector on the sensor are located between the first and second bolt hole.

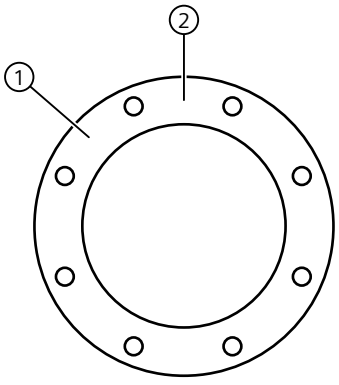

① DN 25 (1") to DN 300 (12")
② DN 350 (14") to DN 1200 (47")

Figure 4-6 Grounding connector location

Metal pipes

Connect straps to both flanges with 6 mm (1/4") screws.

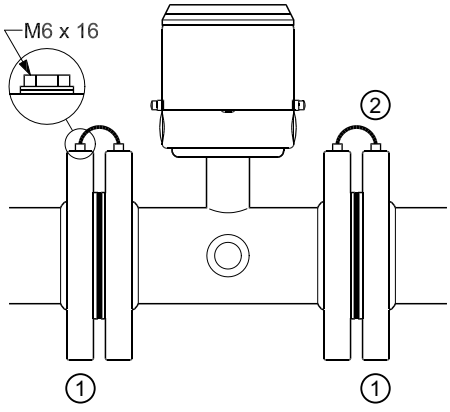

① Metal pipes
② Grounding straps (for DN 25 to DN 300 position is rotated)

Grounding straps are part of delivery and pre-mounted on water meter.

Plastic pipes and lined metal pipes

Use optional grounding rings at both ends.

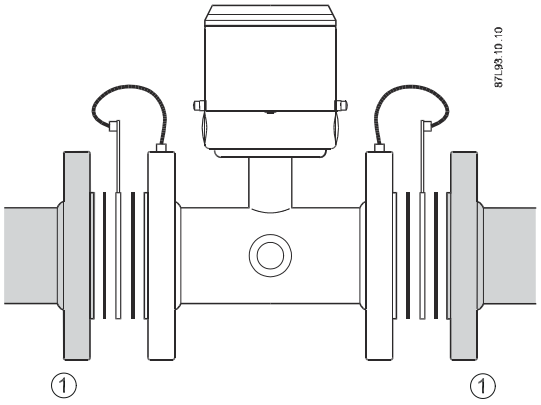

① Plastic pipes or lined metal pipes

Grounding rings are not included in delivery.

Combination of metal and plastic pipes

Use straps for metal pipe and grounding rings for plastic pipe.

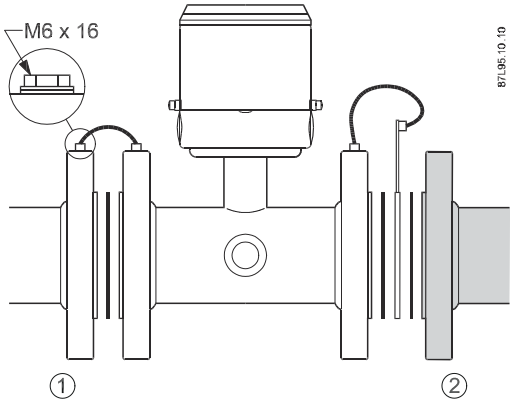

① Metal pipe
② Plastic pipe

Bonding/grounding straps, grounding rings and straps are not included in delivery.

Note

All straps or grounding wires must be 12 AWG (or heavier) copper wire and connected with 6 mm screws.

Electromagnetically polluted environment

Note

Applications with risk of electromagnetically polluted environment

For applications with risk of electromagnetically polluted environment (e.g. HVAC systems, electrical drives, etc.), connect the sensor directly to the ground.

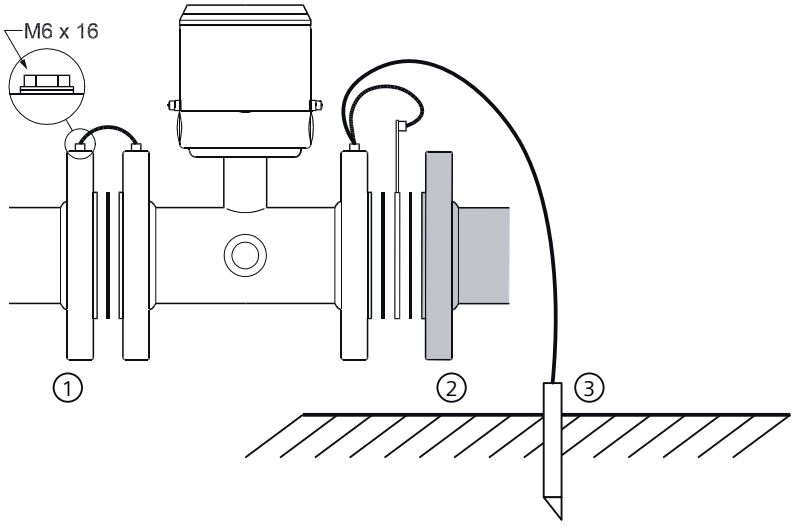

① Metal pipe
② Plastic pipe
③ Grounding rod

4.4 Cathodic-protected pipes

Pay special attention to meter installation in cathodic-protected pipe.

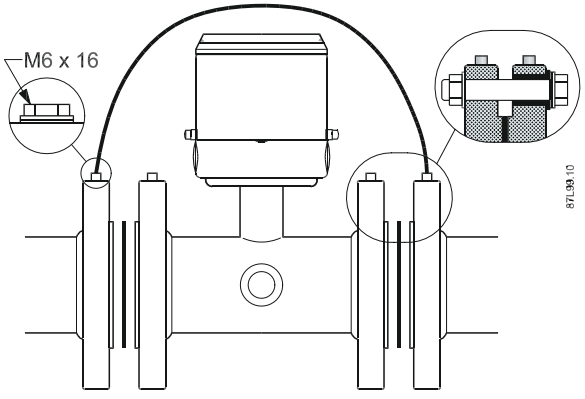

Isolate meter from pipeline by mounting isolation sleeves and washers on flange bolts and connect a wire dimensioned to manage the cathodic current and environmental influence, between pipelines.

4.5 Potting and direct burial

NOTICE
Electrical connections Do **not** pot meter before electrical connections have been made.

Meter is rated IP68/NEMA 6P from the factory as standard. If cable glands are used, IP68/ NEMA 6P enclosure rating is obtained by potting transmitter bottom with Sylgard potting kit. Otherwise only an IP67/NEMA 4 rating is obtained.

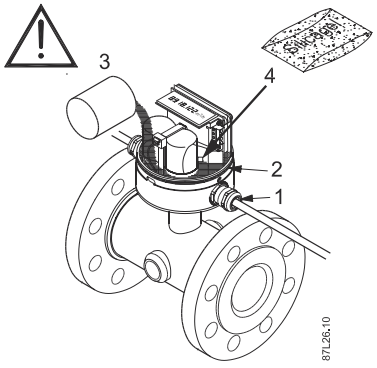

Sealing of transmitter

1. Select the proper gland size to fit installed cable size.
2. Mount O-ring properly and correctly and grease with gel.
3. Fill Sylgard potting kit in bottom part of casing.
4. Renew Silicagel bag (placed behind battery cup) to prevent condensation within meter, if necessary.
5. Mount the enclosure carefully and make sure not to damage the O-ring.

Note

Potting

Ensure not to fill the potting kit in the space for the battery pack.

Ensure Silicagel bag is not in contact with the potting compound.

See also Potting kit instruction (http://support.automation.siemens.com/WW/view/en/43208835).

Direct burial of remote sensor

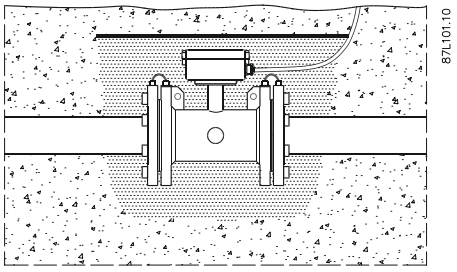

Remote sensor is protected to IP68/NEMA 6P and can be buried.

The use of pea gravel, at least 300 mm (12 inches) all around sensor, is mandatory to provide some drainage and to prevent dirt from solidifying on sensor.

It also helps to locate the sensor should excavation be necessary. Before covering pea gravel with earth, use electrical cable identification tape above gravel.

Run remote sensor cable through a plastic conduit of minimum 50 mm (2 inches).

4.6 Transmitter installation

Mount bracket on a wall as shown below or on a horizontal or a vertical pipe using ordinary hose clips or duct straps.

Wall mounting

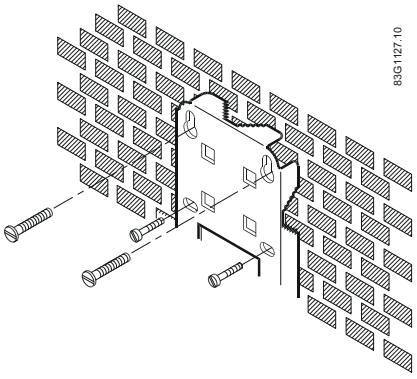

Figure 4-7 Wall mounting

Pipe mounting

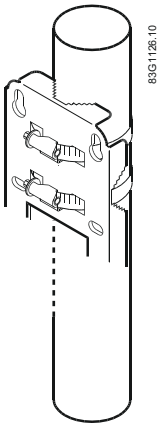

Figure 4-8 Pipe mounting - vertical

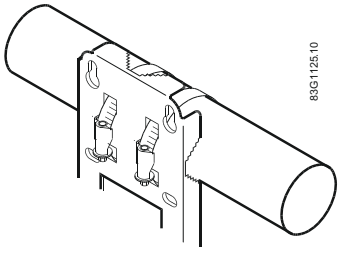

Figure 4-9 Pipe mounting - horizontal

Installation in cabinets

When installing the MAG8000 in cabinets, ensure that the temperature in the cabinet does not exceed or fall below the specified ambient temperatures refer to Technical specifications (Page 93) or device label.

NOTICE
Sufficient cooling Sufficient cooling (passive or active) must be provided in the event of high temperatures due to direct sunlight or other factors. This can be achieved, for example, through ventilation openings at the top and bottom of the enclosure, active fans or air conditioning. Please contact the manufacturer of the cabinet to ensure a professional installation conforming to standards.

Note

Install antennas outside the cabinet

When using a wireless communication module like 3G/IIoT or any external gateway, make sure that the antenna is installed outside the cabinet. Installation inside the cabinet has a significant impact on the signal strength and therefore also on battery consumption.

4.7 MAG 8000 CT

Calibration sealing has been carried out at calibration.

4.7.1 Sealing of MAG 8000 CT

4.7.1.1 Verification sealing

Note

The verification sealing is done at factory after initial verification.

Note

For type-approved and verified MID MAG 8000 CT products

The verification sealing may only be broken by an authorized person, with the acceptance and under direction of the local authorities.

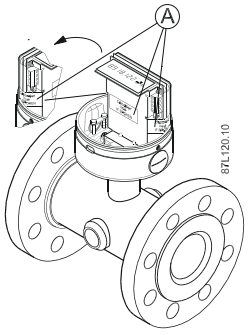

Figure 4-10 MAG 8000 CT verification sealing (A)

4.7.1.2 User sealing

Note

User sealing has to be done after commissioning by an authorized person.

1. Lead one or two wires through the sealing bolts.
2. Seal the ends of each wire.

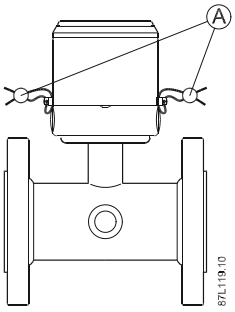

MAG 8000 CT user sealing (A) - compact

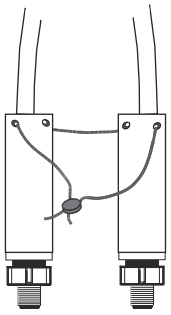

MAG 8000 CT user sealing - remote

4.7.2 Installation conditions

4.7.2.1 MID option (MI-001)

MAG 8000 CT are approved for MI-001 under the following installation conditions.

- DN 50 to 300 (2" to 12") in all orientations
- DN 350 to 600 (14" to 24") only in horizontal installation

Note

Straight pipe upstream and downstream

- DN 50 to DN 300 requires 0x D of straight pipe upstream and downstream from the sensor.
- DN 350 to DN 600 requires 3x D of straight pipe upstream and 3x D downstream from the sensor

Other restrictions may apply (see certificate).

Connecting

5

This chapter consists of general safety requirements as well as a description of how to connect the device.

The connection of the device is done in four steps.

1. Wiring sensor and transmitter (remote version only) (Page 37).
2. Connecting power supply (Page 38).
3. Connecting outputs (Page 40).
4. Connecting add-on module (Page 44).

Connection diagram

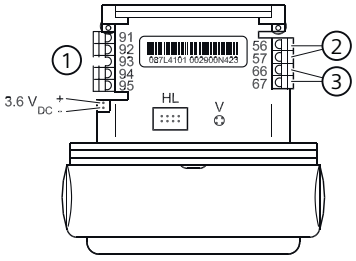

① Module Interface (Option)
② Output A
③ Output B

The 3.6 V DC battery connector - plug and pulse connection terminals are placed in the left side of the PCB board - see figure.

Connection for add-on interface modules is placed on the left side.

HL = Hardware lock key connection

V = Verification button (enables verification mode for 4 hours)

To configure the outputs via PDM, see "Output configuration" (Page 58).

To configure the outputs via Flow Tool, see "Output configuration" (Page 133) in the Flow Tool appendix.

5.1 General safety requirements

WARNING

The pertinent regulations must be observed for electrical installation.

- Never install the device with the mains voltage switched on!
- Danger of electric shock!
- The electrodes and magnetic current line may only be connected when the device is not connected to the power supply.
- If the housing is under voltage (power supply), the cover may be unscrewed by qualified personnel only.

WARNING

Mains supply from building installation Class II

A switch or circuit breaker (max. 16 A) must be installed in close proximity to the equipment and within easy reach of the operator. It must be marked as the disconnecting device for the equipment.

5.2 Remote version

Remote installation

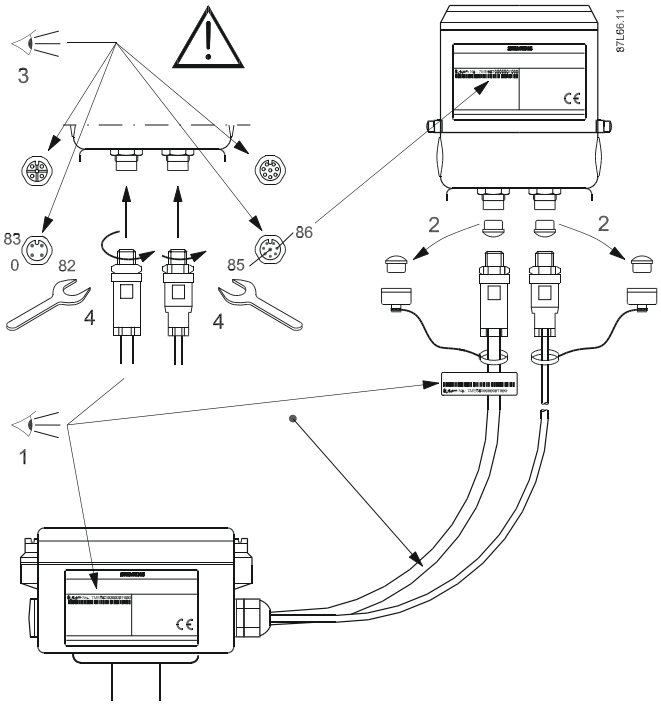

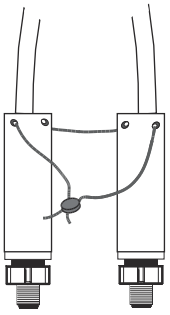

MAG 8000 CT user sealing

1. Verify that model and serial numbers shown on labels of sensor and transmitter are matched properly.
2. Ensure that cable is safely installed to avoid damage of cable and connectors. Please note the different coil and electrode connector types both having a minimum RADIUS of 45 mm (1.8 inches); otherwise there s a risk of damaging the cable. Save dust covers for future use and protection.
3. Ensure connectors are clean.
4. Ensure connectors are fastened securely to achieve a good connection and watertight seal.

Note

If dirt enters connector ends, use plain water for cleaning. Ensure connectors are completely dry before making connections.

For MAG 8000 CT user sealing, see Sealing of MAG 8000 CT (Page 33).

5.3 Power supply

Connection diagram for 115 to 230 V AC (mains) or 12/24 V AC/DC (line) power supply

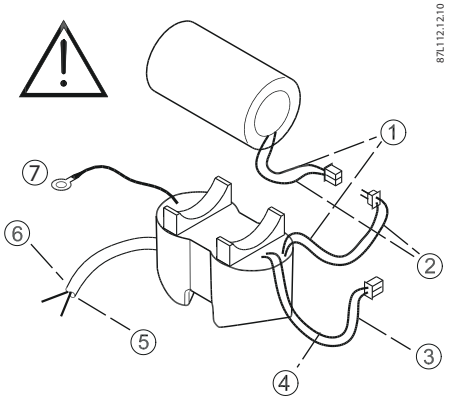



Backup battery connection	①	Red
	②	Black
MAG 8000 PCB connection	③	Blue
	④	Yellow
External power supply connection	⑤	Blue (**N**eutral / **-**)
	⑥	Brown (**L**ine / **+**)
Shielding	⑦	Shielding wire

It is mandatory to connect the shielding wire to the MAG 8000 device earthing; otherwise IrDA communication will not work satisfactorily.

115 to 230 V AC (mains) power supply

Mains power input	Factory mounted PUR cable with 2 x 1 mm² (brown wire, blue wire) cable length = 3 m
	Brown wire - L (**L**ine, **+**) and blue wire - N (**N**eutral, **-**)
Mains power output	Battery cable socket with blue and yellow wires; blue wire is ground. Battery cable socket has to be connected to 3.6 V DC cable plug on PCB board
Battery backup input	Battery cable plug with black and red wires; black wire is ground. Battery cable plug has to be connected to cable socket on backup battery
Functional ground	Black wire with terminal must be connected to the device encapsulation with a screw
Mains power supply has to be connected to a switch near water meter according to IEC 61010-1 clause 5.4.3.d	

12/24 V AC/DC (line) power supply

Line power input	Factory mounted PUR cable with 2 x 1 mm² (brown wire, blue wire) cable length = 3 m
	Brown wire - L (line, hot, positive) and blue wire - N (neutral, cold, negative)
Line power output	Battery cable socket with blue and yellow wires; blue wire is ground. Battery cable socket has to be connected to 3.6 V DC cable plug on PCB board

Battery backup input	Battery cable plug with black and red wires; black wire is ground. Battery cable plug has to be connected to cable socket on backup battery
Functional ground	Black wire with terminal must be connected to the device encapsulation with a screw

Cable installation

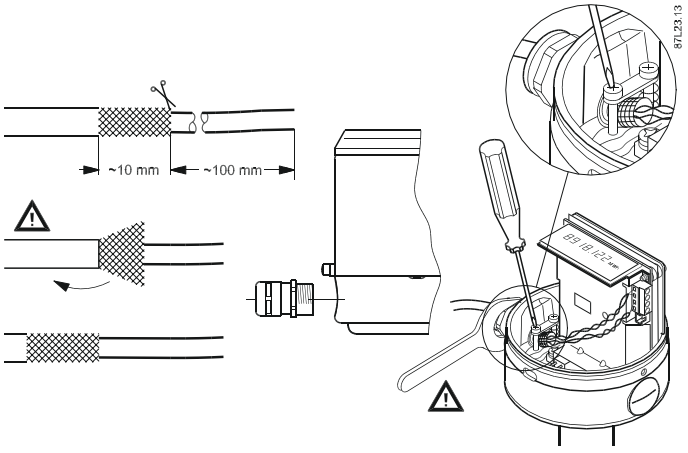

Choose the correct glands for the selected cable type, see Accessories for glands selection.
Ensure shield is mounted under cable clamps - do not make pig tails.

Note

Mains or line-powered PUR cable (no shield) has to be mounted under cable clamps. All cable glands have to be sufficiently tightened to ensure IP-rating.

5.4 Outputs

Pulse output connection diagram for MAG 8000

MAG 8000 internal connection 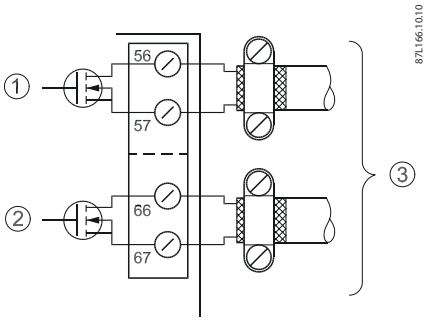		① Output A ② Output B ③ Passive output - no polarization - open drain
External connection variant 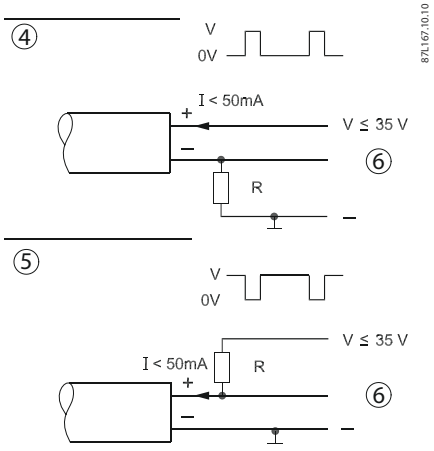		④ Positive pulse logic ⑤ Negative pulse logic ⑥ Signal

Pulse output can be configured as volume, alarm or call-up, see Commissioning (Page 58).

Pulse output is not polarized and can be connected for positive or negative logic.

Pull up/down resistor (R) is selected in relation to power supply voltage (V) and with a max. current (I) of 50 mA.

Note

Pulse output isolation

The MAG 8000 pulse output has a functional isolation only and must therefore be connected to equipment complying with the Low Voltage Directive in order to be considered safe.

Note

Pulse output is not part of the MID-001 approval

The use of the pulse output for billing purposes is only permitted if:

- The legislation in the country of use permits an ancillary device for verification required billing. The regulations are not uniform within the European Union. In some countries, the local display of the water meter is the only permitted display for use in legal metrology.
- The system consisting of the MAG 8000 CT pulse output and the pulse count of an external measured-value display is certified by the national metrological authority.
- Pulse B function is only allowed to be set to Alarm or call up in MAG 8000 CT with MID-001 approval.

5.5 Communication modules

RS 232 connection diagram

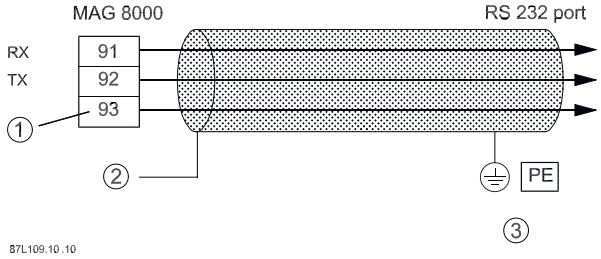

① Common
② Connect shield to encapsulation
③ Shield must be connected to protective ground

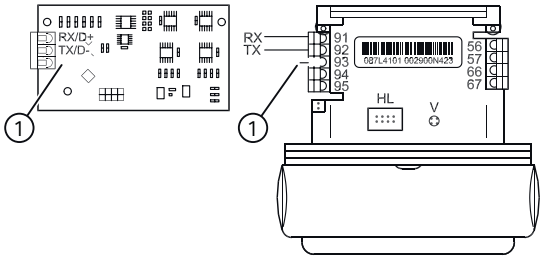

① Common

A Modbus over serial line cable must be shielded.

At one end of each cable its shield must be connected to protective ground. If a connector is used at this end, connector shell must be connected to cable shield.

RS 485 connection diagram

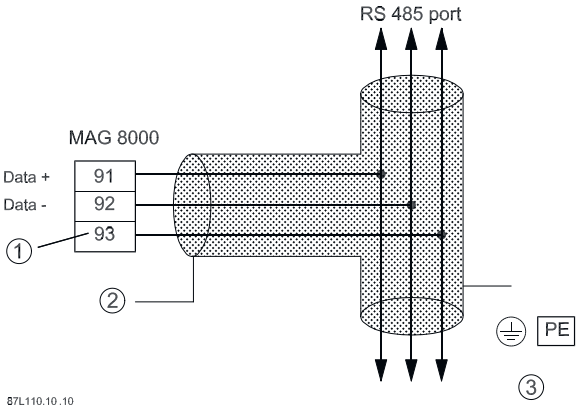

① Common
② Connect shield to encapsulation
③ Shield must be connected to protective ground

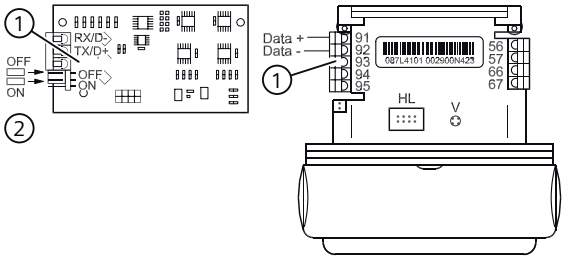

① Common
② Termination

A Modbus RS 485 must use a balanced pair (for D+ - D–) and a third wire (for common).

For the balanced pair used in an RS 485 system, a characteristic impedance with a value between 100 and 120 ohms must be used.

Shield must always be connected to MAG 8000 encapsulation using cable clamp as shown in figure in section cable installation, see Power supply (Page 38).

Bus termination:

All RS 485-based networks must be terminated correctly to function properly. A termination must be placed at each end of segment.

The Modbus RTU module can add a 120 ohm termination if a jumper is placed beside terminals in position "ON".

Termination is set to "ON" from factory.

Note

White tape ring on Modbus cable

With order code M83 and M86 both cables are factory mounted. To differentiate between the cables, the Modbus cable is marked with a white tape ring.

Encoder interface connection diagram

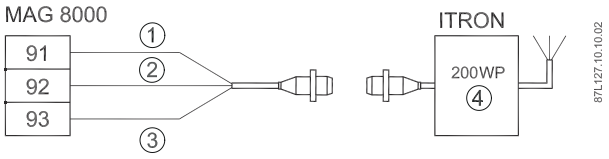

① Black wire
② Red wire
③ Unshielded wire
④ Endpoint

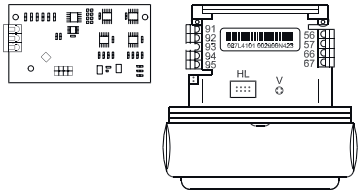

Figure 5-1 Encoder interface cable connection between MAG 8000 and ITRON 200WP with Itron cable

Connect black wire to terminal 91, red wire to terminal 92 and unshielded wire to terminal 93.

⚠ WARNING

Unshielded wire

It is important that unshielded wire does not touch any metal parts of MAG 8000 housing.

Other radio interface cable has to be a 3-wire cable with a shield connected to MAG 8000 housing (mounting cable shield is shown to the right).

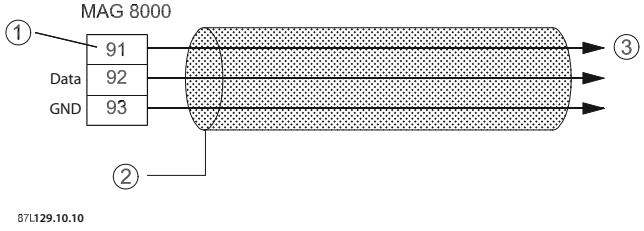

① Power clock
② Connect shield to encapsulation
③ Radio interface

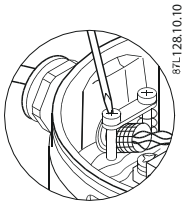

5.6 Connection of add-on modules

When the add-on module has been installed, the electrical connections are available on terminal rows 91-97.

For more information

Refer to the relevant BUS communication Quick Start or Operating Instructions available on an included DVD or on the internet, at: www.siemens.com/flowdocumentation (www.siemens.com/flowdocumentation).

Information on the operation of communication modules

For information on how to operate the various communication modules, see:

- 3G/UMTS add-on module Operating Instructions (https://support.industry.siemens.com/cs/ww/en/view/109751612)
- Modbus RTU Operating Instructions (http://support.automation.siemens.com/WW/view/en/54091509)

Commissioning

6

The meter can be configured using a PC software package - either SIMATIC PDM or Flow Tool.

Both SIMATIC PDM and Flow Tool are software packages for configuring, parameterizing, commissioning and maintaining devices (e.g. transducers) and for configuring networks and PCs.

For commissioning via Flow Tool, refer to the appendix "Flow Tool" (Page 123).

6.1 Overview SIMATIC PDM

SIMATIC PDM (Process Device Manager) is a general-purpose, manufacturer-independent tool for the configuration, parameter assignment, commissioning, diagnostics and maintenance of intelligent field devices and field components. Follow-up installations and additional information on SIMATIC PDM are available on the Internet at SIMATIC PDM (https://www.siemens.com/simatic-pdm).

SIMATIC PDM monitors the process values, alarms and status signals of the device. It allows you to display, compare, adjust, verify, and simulate process device data; also to set schedules for calibration and maintenance.

For information on, for example, how to install and integrate devices, commission the software, see Operating Manual 'Help for SIMATIC PDM'. The manual is delivered with SIMATIC PDM software. Once the SIMATIC PDM is installed on your computer you find the manual under: Start > All programs > Siemens Automation > SIMATIC > Documentation. Link at our website: SIMATIC PDM instructions and manuals (https://support.industry.siemens.com/cs/ww/en/ps/16983/man).

Note

Field device parameters

- For a list of parameters and additional information, consult section "Parameter lists (Page 147)".
- The field device remains in measurement mode during the time you configure the field device.

6.2 Initial commissioning via SIMATIC PDM

6.2.1 Check SIMATIC PDM version

Procedure

1. Go to SIMATIC PDM Download (http://www.siemens.com/simaticpdm/downloads).
2. Check the support page to make sure you have:
   - The latest version of SIMATIC PDM
   - The most recent Service Pack (SP)
   - The most recent hot fix (HF)

6.2.2 Updating the Electronic Device Description (EDD) or Field Device Integration (FDI)

Procedure

1. Check that the EDD or FDI revision match the Firmware revision in the device according to the table in section Document history (Page 7).
2. Go to the support page Software downloads (https://www.siemens.com/processinstrumentation/downloads).
3. Enter the product name in the field "Enter search term...".
4. Download the most current EDD or FDI of your device.
5. Save files to your computer in an easily accessed location.
6. Launch SIMATIC PDM – Device Integration Manager.
   From the File menu, click "Read device descriptions from compressed source...".
7. Browse to the compressed EDD or FDI files, select and open it.
8. From the Catalog menu, use the "Integration" function to integrate the EDD or FDI into the device catalog. The EDD or FDI is now accessible via SIMATIC Manager.

This chapter describes how to install the PDM device driver (EDD). The newest EDD driver is available on the internet (http://support.automation.siemens.com/WW/view/en/19701862/133100).

The PDM device driver (EDD) is compatible with PDM 6, PDM 8 and PDM 9.

Install the EDD files from SIMATIC PDM "Manage Device Catalog" via the following steps:

Windows START menu → program folder "SIMATIC" → SIMATIC PDM → Manage device catalog.

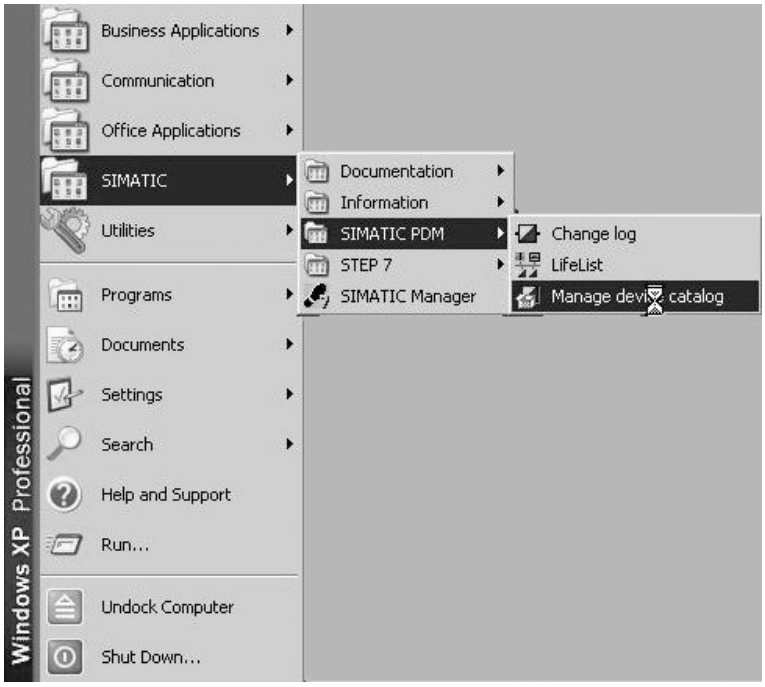

In the SIMATIC PDM "Manage Device Catalog" window, click on "Browse" and navigate to the driver and the path where the file was downloaded and saved. The PDM will show a tree with the Software options. Click on the "Siemens" checkbox to select all options.

Click OK to install the new EDD files.

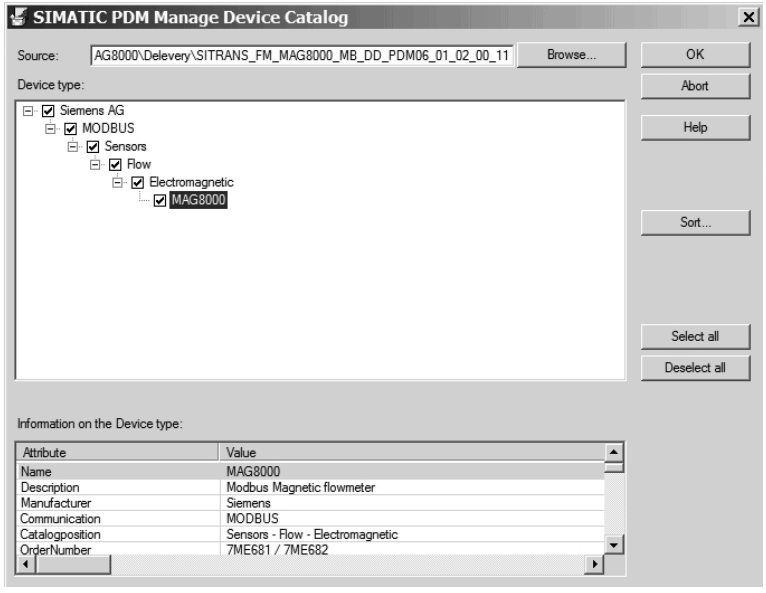

6.2.3 Configuring the device

This chapter describes how to set up the meter for communication with the PC. The options in both SIMATIC PDM and Flow Tool software are the same; only the views on the PC screen differ.

Setting up meter

1. Click on "File".
2. Select "New".
3. Assign a new project name in the "Name" box, e.g. MAG8000.

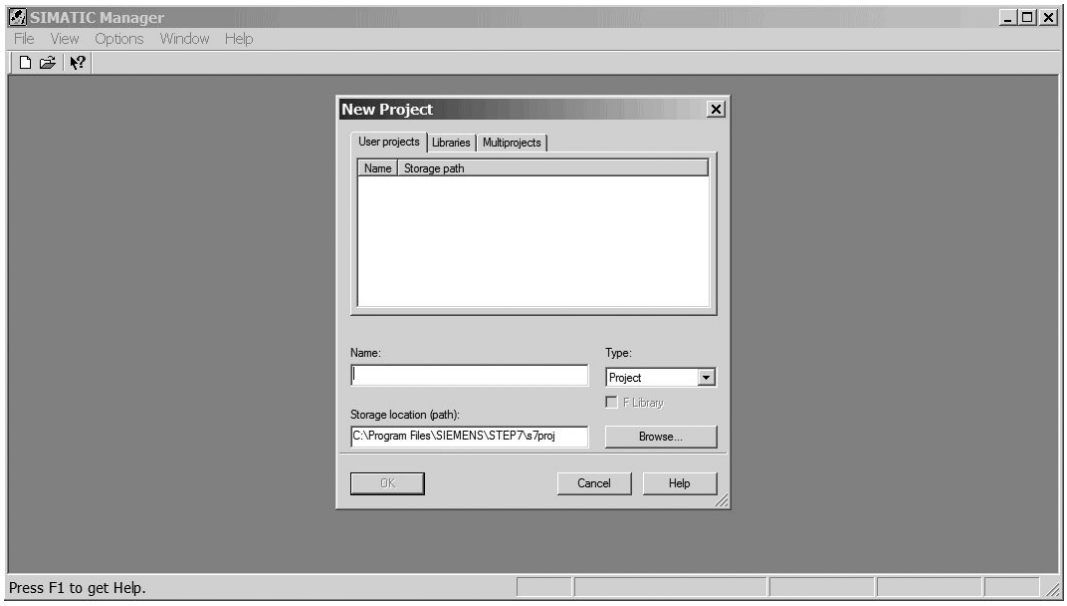

4. In Process Device Network View, right-click on "Net" → select "Insert New Object" → "MODBUS net".

5. Right-click on "MODBUS net" → select "Object Properties...".

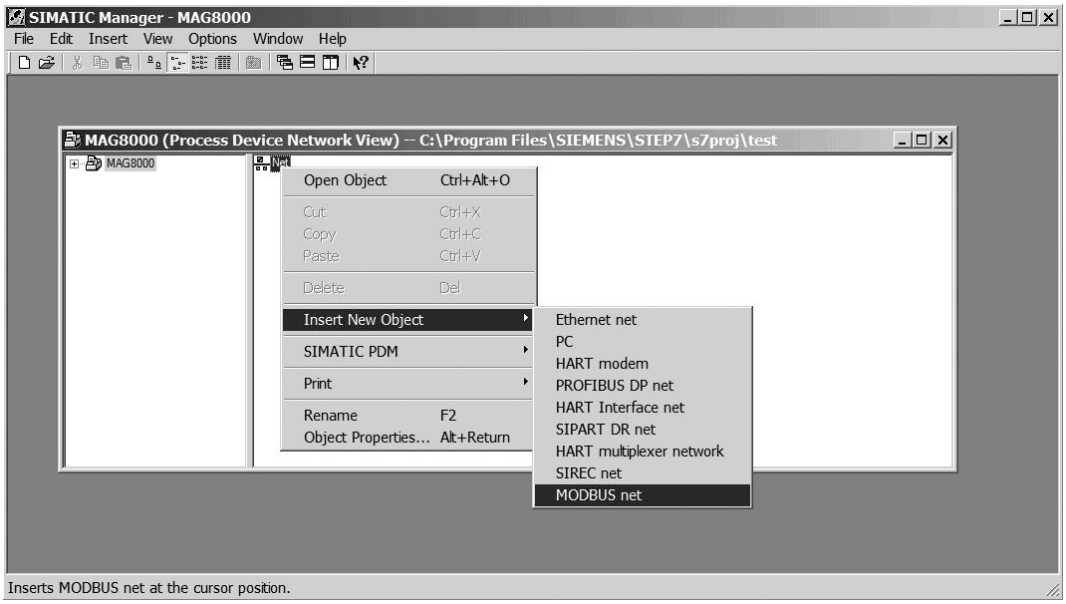

6. Click on "Connection" tab and select "activated" for IrDA. Click "OK".

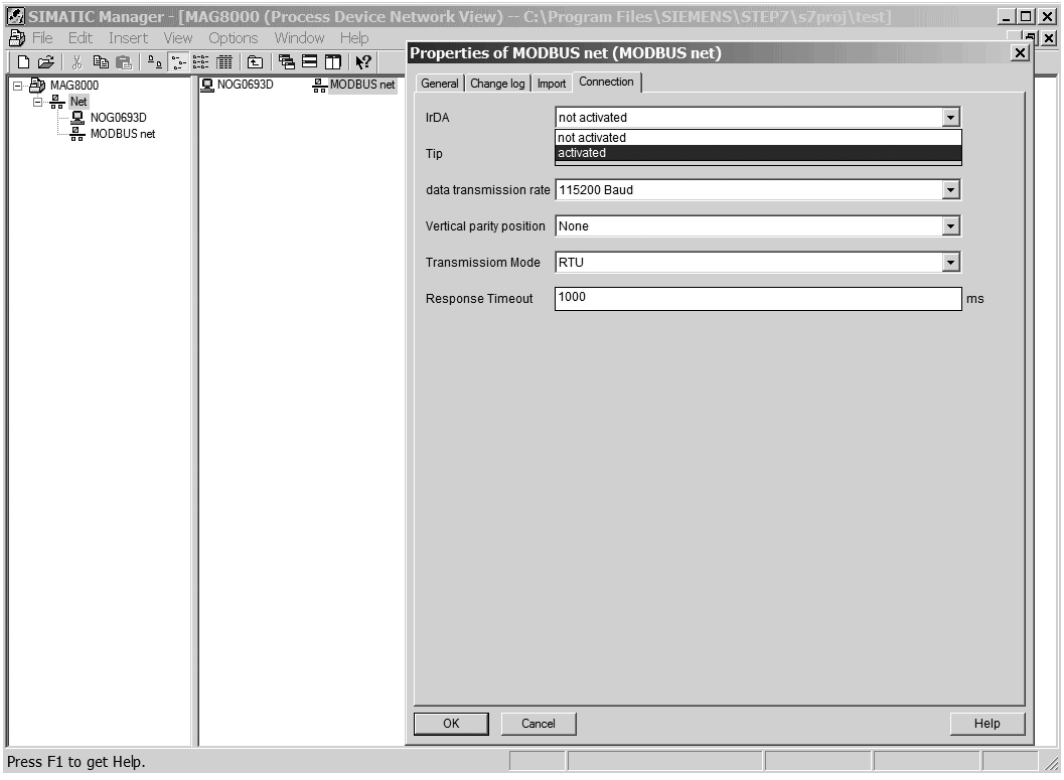

Note

Maximum data transmission rate

The maximum data transmitter rate for the MAG 8000 is 19 200 baud.

If the IrDA adapter is connected properly, a small IrDA icon will appear in the Windows notification area.



When placing mouse at this icon, the device information will be shown (e.g. "MAG8000 SN1234 is in range").

7. In Process Device Network View, right-click on "MODBUS net" → "Insert New Object" → "MODBUS device".

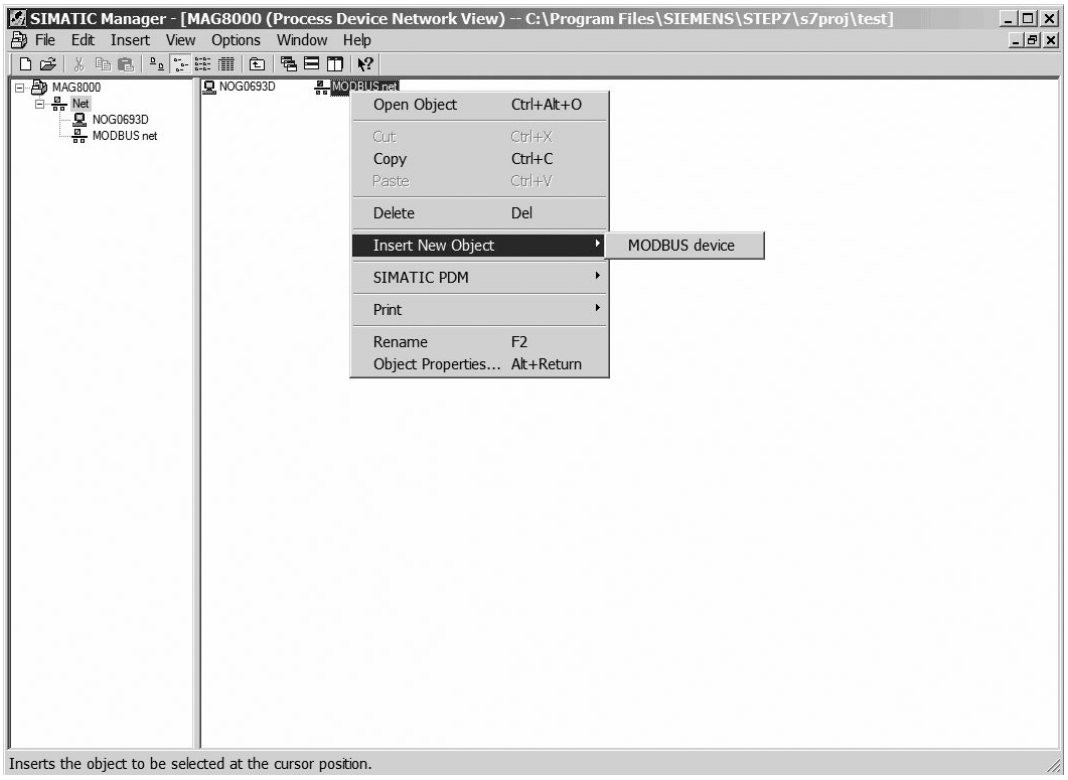

8. Click on "Assign". In new pop-up window, click on "Flow" → "Electromagnetic" → "Siemens AG" → "MAG8000".
9. Select the proper device (MAG 8000 Advanced, MAG 8000 Basic, MAG 8000 CT Advanced, or MAG 8000 CT Basic) depending on transmitter version to be controlled.

10. Click on "OK".

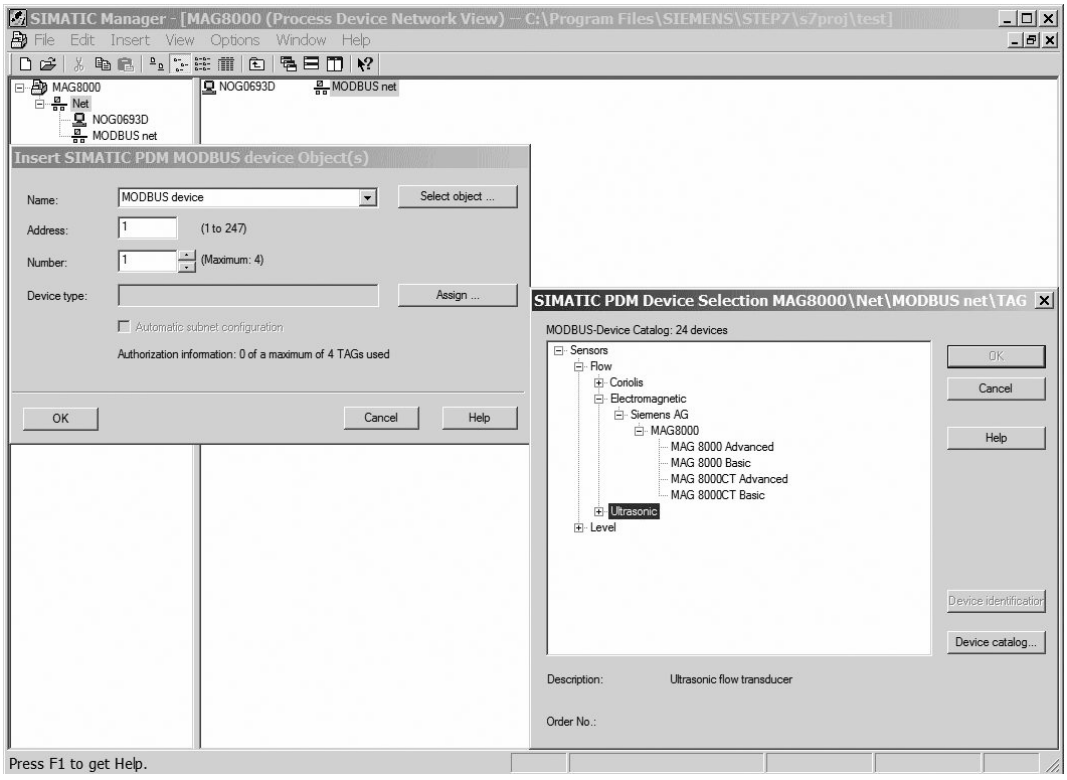

11. Double-click created device, e.g. "MAG8000 Advanced". A new window will pop up for device parameter configuration.

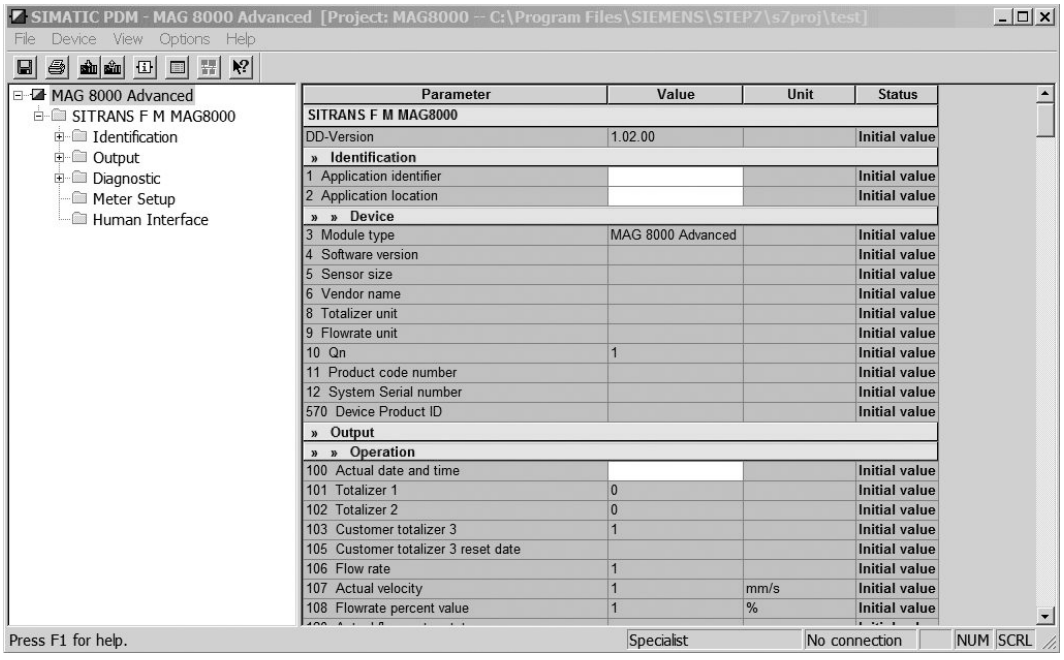

Parameter	Value	Unit	Status
SITRANS F M MAG8000			
DD-Version	1.02.00		Initial value
» Identification			
1 Application identifier			Initial value
2 Application location			Initial value
» » Device			
3 Module type	MAG 8000 Advanced		Initial value
4 Software version			Initial value
5 Sensor size			Initial value
6 Vendor name			Initial value
8 Totalizer unit			Initial value
9 Flowrate unit			Initial value
10 Qn	1		Initial value
11 Product code number			Initial value
12 System Serial number			Initial value
570 Device Product ID			Initial value
» Output			
» » Operation			
100 Actual date and time			Initial value
101 Totalizer 1	0		Initial value
102 Totalizer 2	0		Initial value
103 Customer totalizer 3	1		Initial value
105 Customer totalizer 3 reset date			Initial value
106 Flow rate	1		Initial value
107 Actual velocity	1	mm/s	Initial value
108 Flowrate percent value	1	%	Initial value

6.3 Setting the basic parameters

Note

No factory reset

The device is delivered with factory settings that are not stored as default values. Because no default values are present in the meter, an automatic return to factory values is not possible.

Enter password

The "User" dialog box is always displayed on the first start-up after installation of SIMATIC PDM but not on the first start-up for a specific device.

You can also use the menu command "Options" → "Settings" to specify whether you are permanently registered as a "Maintenance engineer" or "Specialist" and/or whether to disable the display of the "User" dialog box. Refer to SIMATIC PDM help manual for more details of "Maintenance engineer" and "Specialist".

Proceed as follows:

Click the appropriate button ("Maintenance engineer" or "Specialist").

If the option "Specialist" is selected, enter the password in the "Password" box in order to work with additional parameters. The default password is "1000", and can be changed after gaining access to the meter.

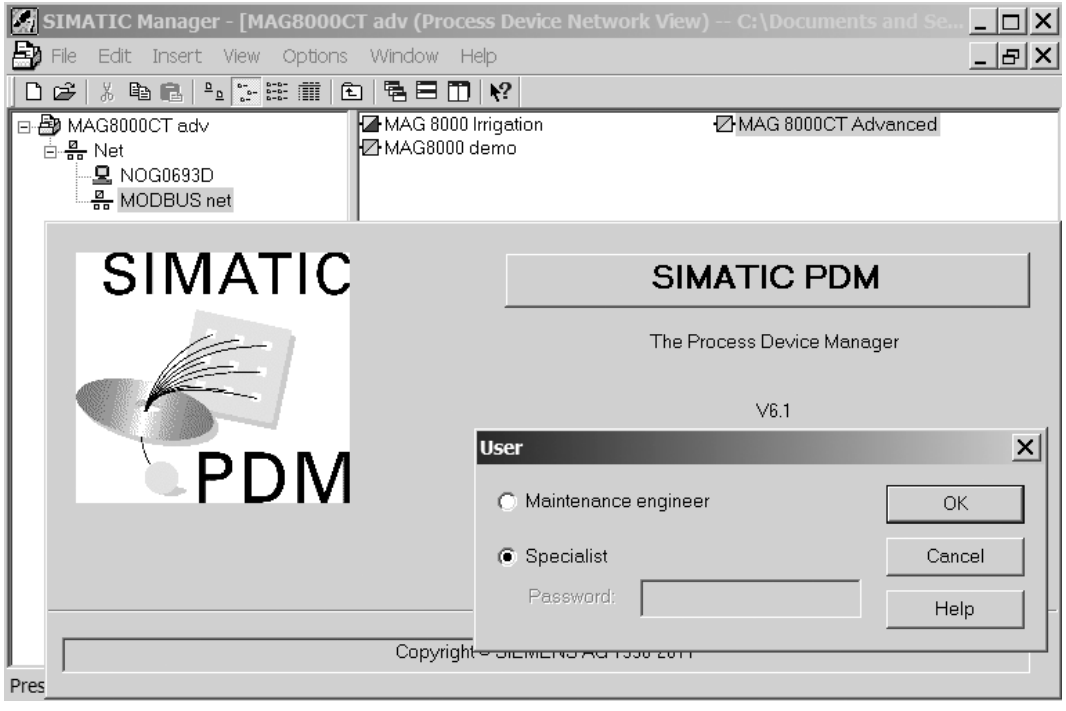

Read, write, print or export meter data

Select "Device" → "Upload to PC/PG" to load all device parameters from the device to the offline data storage.

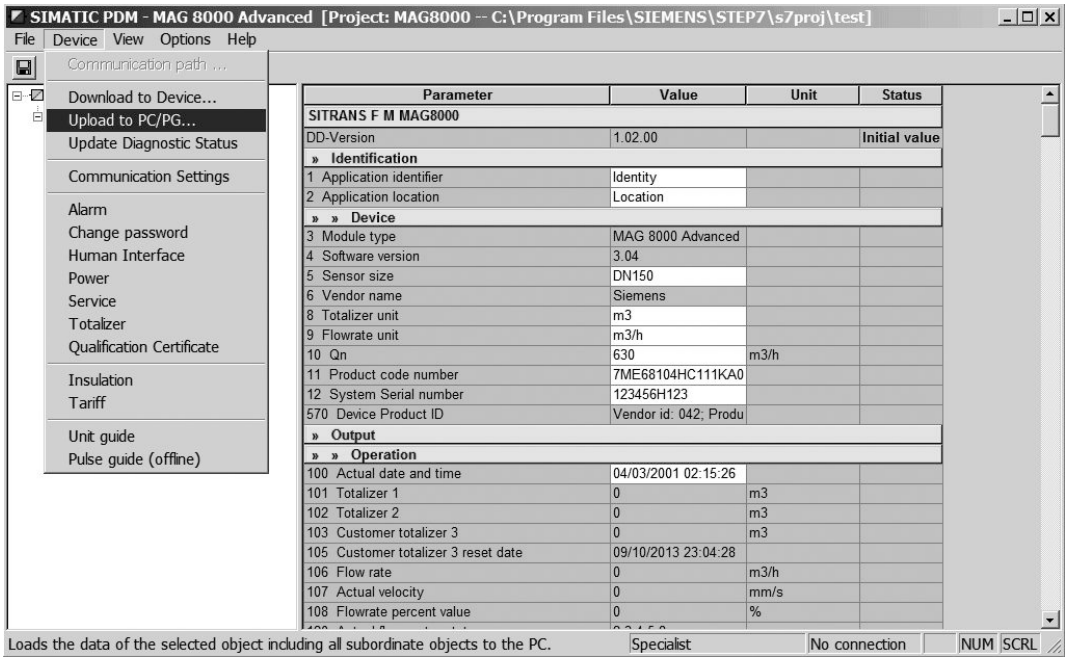

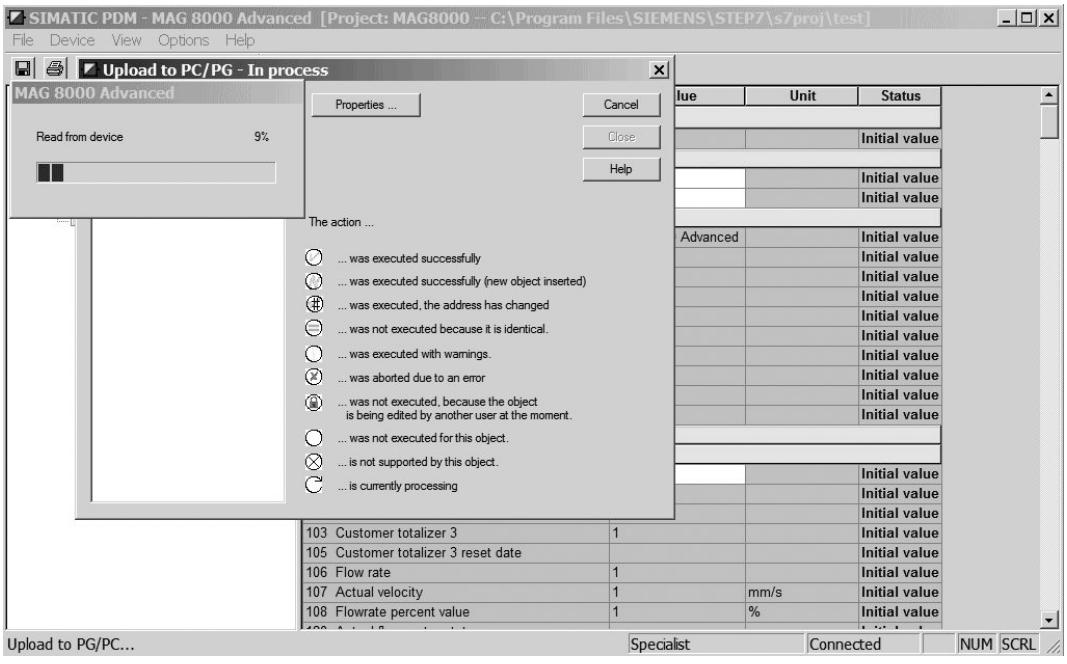

Only parameters (data) shown on white background can be changed. Red texts are off-line data which are not stored in the MAG 8000 yet, whereas black texts show the actual meter data. Each adjustable parameter has a "Default Value", a "Minimum Value", and a "Maximum Value" which are prompted by right-clicking on the parameter. More information will be available when the "Help" button is clicked.

Each parameter has a description (prompt) advising how the parameter can be programmed and which settings are programmable.

The figure below shows alarm status with the marked alarms enabled. Click on "Transfer" to instantly synchronize alarm configurations between the PC and the device.

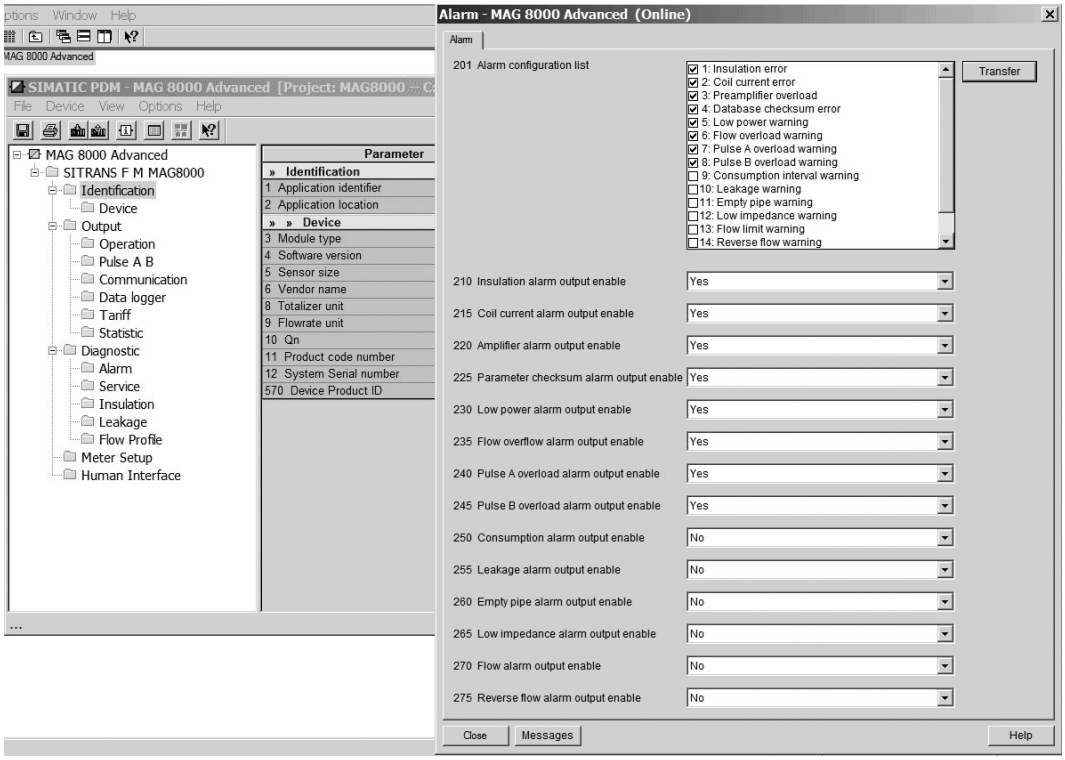

Figure 6-1 Alarm status - marked alarms are enabled

Select "Device" → "Download to Device..." to download all the changed parameters to the device.

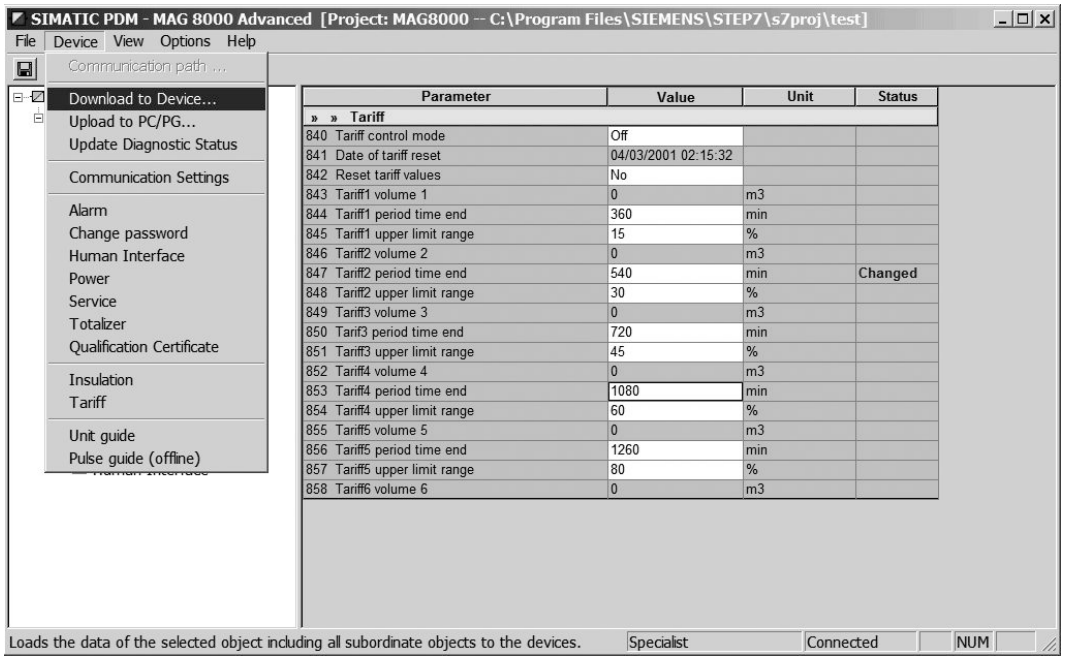

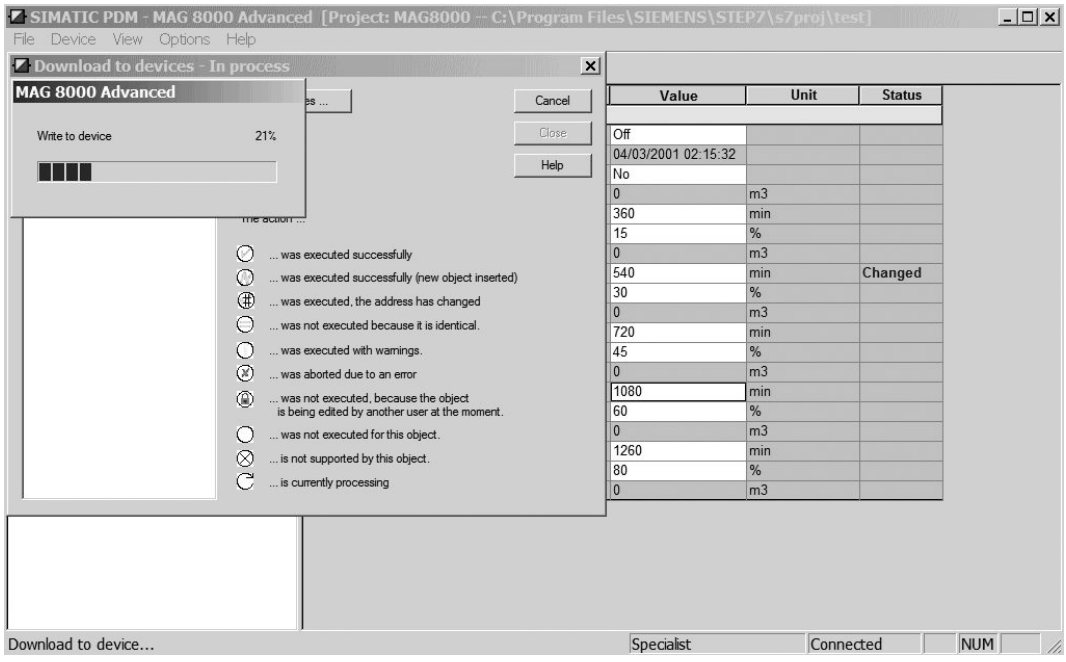

The meter configuration and parameters can also be exported as PDM data, and imported to another location, e.g. another project or PC.

In the SIMATIC Manager view, right-click on the PDM object to be exported, select "Export...". In the subsequent dialog box, specify the type of export as well as the name and location where the PDM file containing the exported data is to be saved. Confirm the entries by clicking "OK".

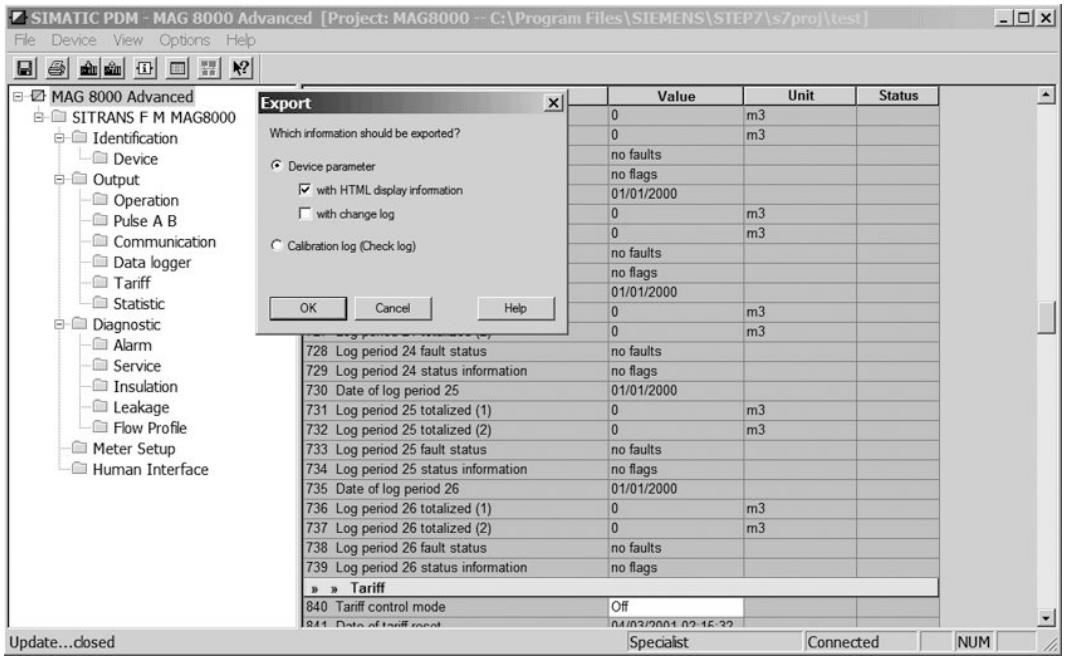

During the export process, a dialog box is displayed showing export progress. After the export is completed, the status "Result" is displayed.

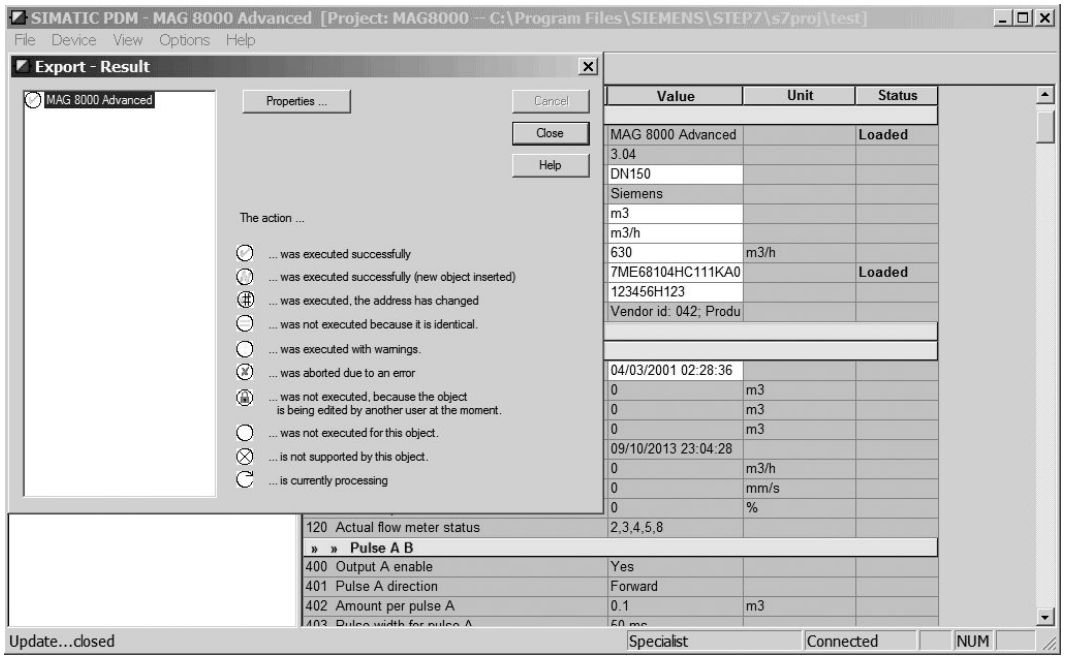

See also

www.siemens.com/flow (www.siemens.com/flow)

6.4 Unit selection

The device is delivered with totalizer and flow rate units in m and m^3/h, respectively, as standard. However, it is possible to manually configure the device to operate with other units.

Changing the units

1. Select "Device" → "Unit guide".
2. Select the new unit from the list.
3. Click on "Apply Change of Units".

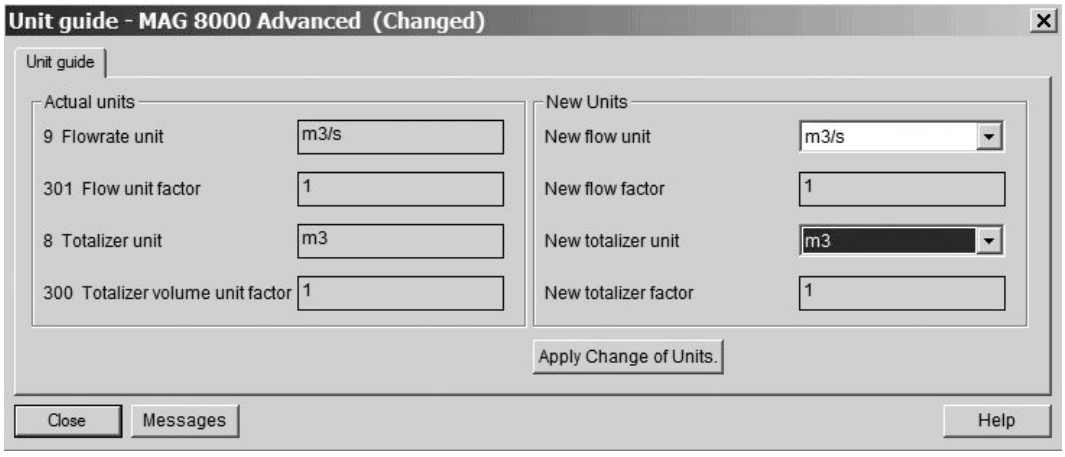

Afterwards, the change must be stored into the transmitter via "Download to Device".

6.5 Output configuration

Pulse output can be configured as volume pulse, alarm or call-up. Default factory setting is with output A enabled for forward flow and output B for alarm output.

Output configuration in SIMATIC PDM

Select "Output". The software window shows the parameters for output configuration. Each parameter has its own guideline for selecting the correct parameter setting.

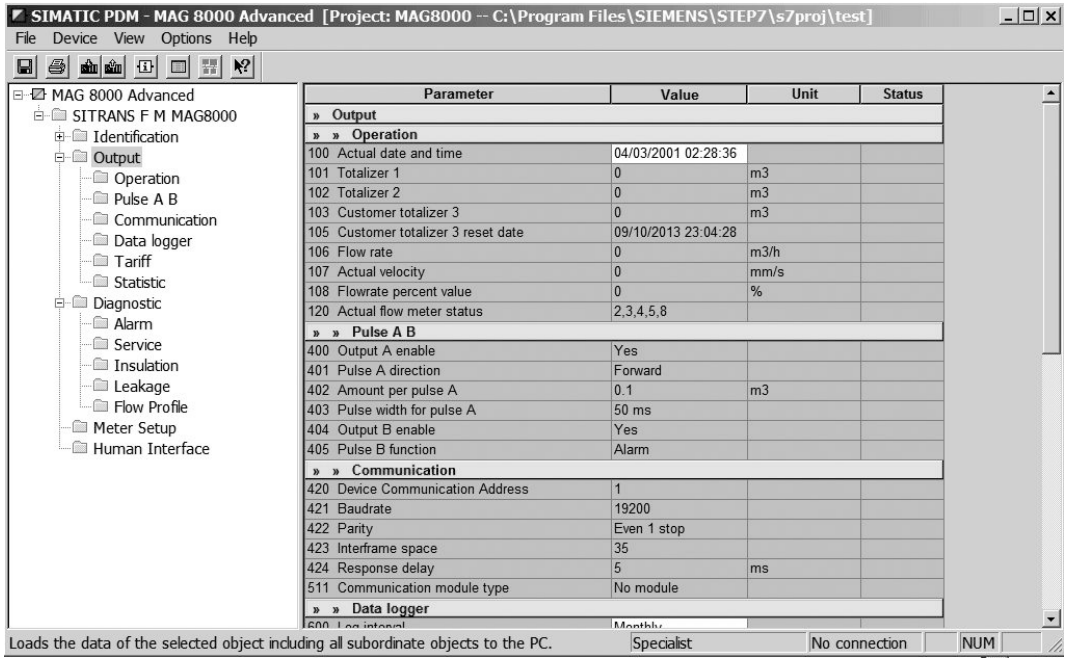

See "Output characteristics" (Page 99) for more information on how the outputs work.

6.6 Data protection

Using the hardware key

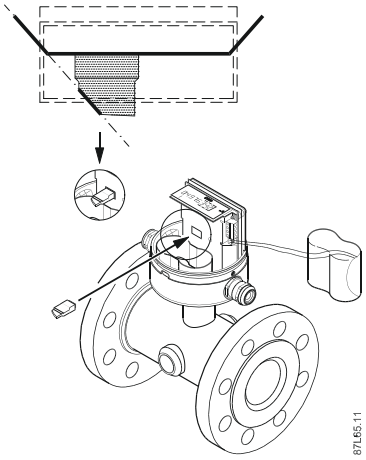

A hardware key is installed in the hardware lock hole to change protected parameters. The hardware lock hole is located in the front of the PCB board behind the battery. For a complete list of protected parameters go to Unit selection (Page 130).

Operating

7

7.1 Operation via key and display

The meter is designed with a single key and a symbolic display for optimal dialog.

Display

Display is divided into 3 areas.

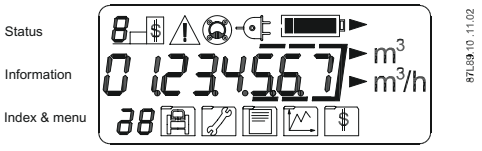

Figure 7-1 Display

- Top area with symbols for status information.
- Middle area with actual information.
- Bottom area with index for actual information and selected menu.

Some of the information has additional information connected and display will automatically toggle between information, see menu overview (Page 66). If key is not pressed for 10 minutes, display will time-out and return to default configured operator menu.

Key

There are three different ways the interface key will respond to being pressed:

1. A brief press (less than 2 seconds) will advance screen to next index or menu.
2. A short press (2 to 5 seconds) will enter a menu or escape menu selection.
3. A long press (more than 5 seconds) while in the operator menu (▬) will activate a reset of selected value (e.g., call-up function) indicated by an "r".

A flashing "r" indicates a reset. A request for time and date setup is shown during power-up.

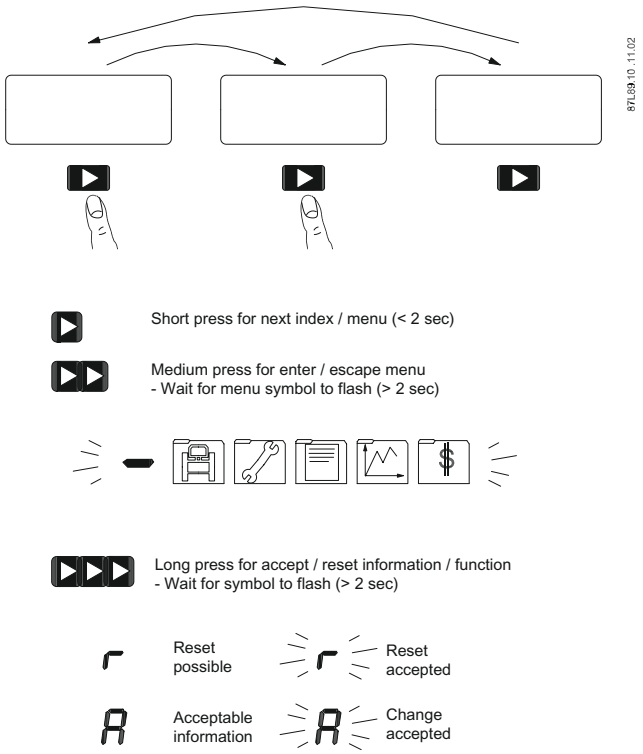

Figure 7-2 Key and display operation

It will take 3 to 5 minutes for the capacitive touch key's self-calibration once the MAG 8000 transmitter enclosure is removed and mounted again. There will be no response from the touch key during self-calibration.

7.2 Display symbols

Top area of display shows status bar.

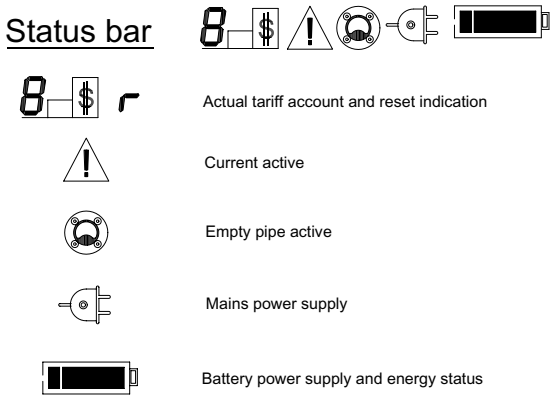

Figure 7-3 Status bar

Status information symbols show actual operation of meter.

Tariff symbol shows actual accounting tariff. In operator menu, tariff value will change to "r" if information is resettable.

Alarm symbol is active when an alarm is active and shown independently of alarm output configuration.

Empty pipe symbol indicates an empty pipe condition. To conserve power and prevent false readings due to exposed measurement electrodes, flow measurement is disabled until a full pipe is detected and the symbol has disappeared.

Power supply type is automatically detected by meter.
Plug symbol indicates that mains power is supplied.
Battery symbol indicates that battery power is supplied. It also indicates remaining battery capacity, see Operation menu index 1 (Page 66) for more information.

Bottom part of display shows menu bar.

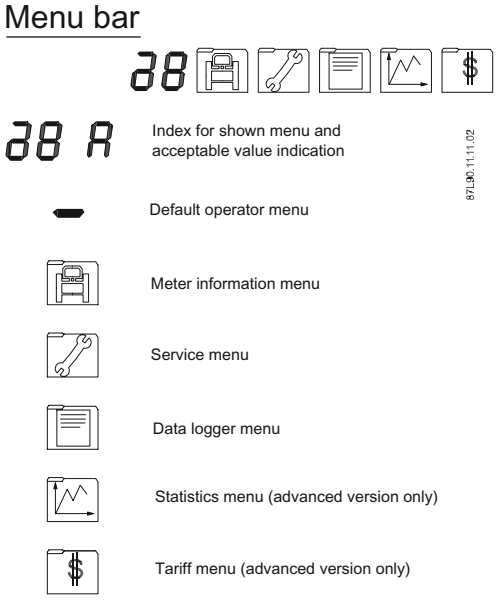

Figure 7-4 Menu bar

The **menu bar icons** indicate actual selected menu and related index for selected information. Display overview shows relation between menu, index and information.

Only operator menu (▬) has information and functions that can be reset. During power-up function battery power can be preset to 100% capacity and time and date can be adjusted - an "A" in index shows acceptable values. The menu shown in each menu index is the menu bar.

7.3 Default display information and accessible display menus

Parameter 131 defines the default display information with selection between

- Totalizer 1 (Index 1)
- Totalizer 2 (Index 2)
- Actual flow rate (Index 3, updated with selected measuring frequency)

- Fault codes (Index 4)
- Net totalizer

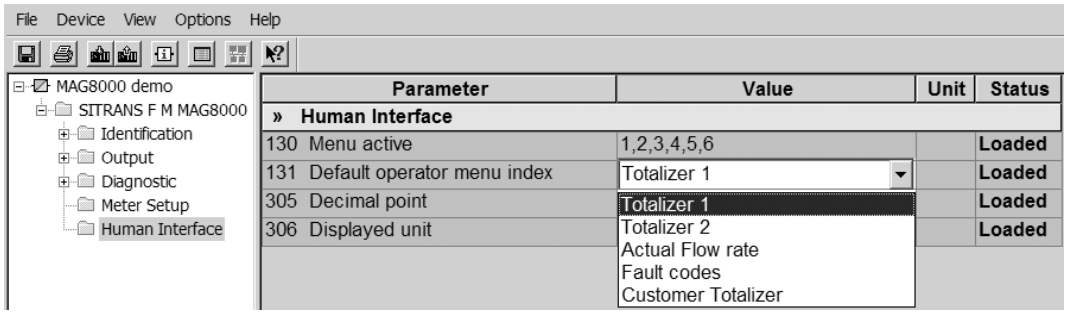

Default information is shown after power-up as well as after no key operation for 10 minutes.

Parameter 130 defines accessible display menus with selection of one or more of the following menus:

- Operator menu
- Meter info menu
- Service menu
- Data logger menu
- Statistic menu (advanced version only)
- Revenue menu (advanced version only)

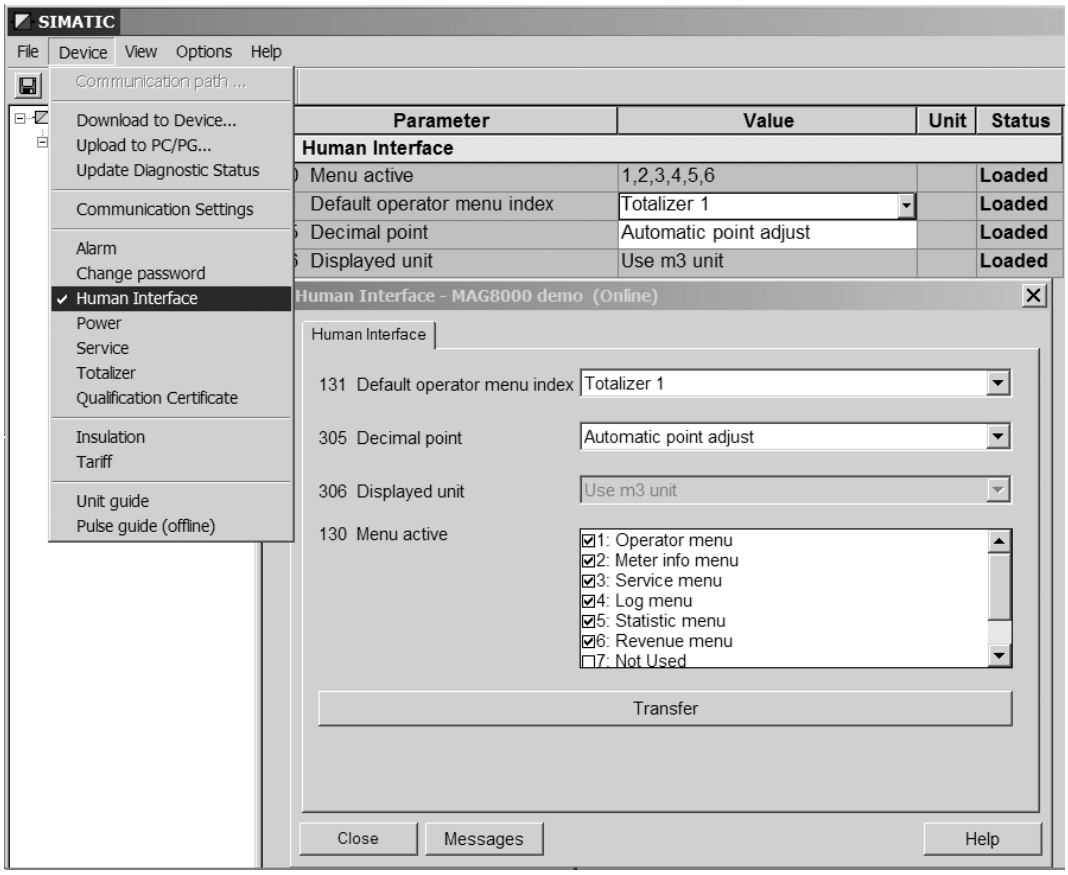
SIMATIC
File
Device
View
Options
Help
Communication path ...
Download to Device...
Upload to PC/PG...
Update Diagnostic Status
Communication Settings
Alarm
Change password
Human Interface
Power
Service
Totalizer
Qualification Certificate
Insulation
Tariff
Unit guide
Pulse guide (offline)
Parameter
Value
Unit
Status
Human Interface
Menu active
1,2,3,4,5,6
Loaded
Default operator menu index
Totalizer 1
Loaded
Decimal point
Automatic point adjust
Loaded
Displayed unit
Use m3 unit
Loaded
Human Interface - MAG8000 demo (Online)
Human Interface
131 Default operator menu index
Totalizer 1
305 Decimal point
Automatic point adjust
306 Displayed unit
Use m3 unit
130 Menu active
1: Operator menu
2: Meter info menu
3: Service menu
4: Log menu
5: Statistic menu
6: Revenue menu
7: Not Used
Transfer
Close
Messages
Help

7.4 Operator menu

The operator menu consists of several indexes described in the following.

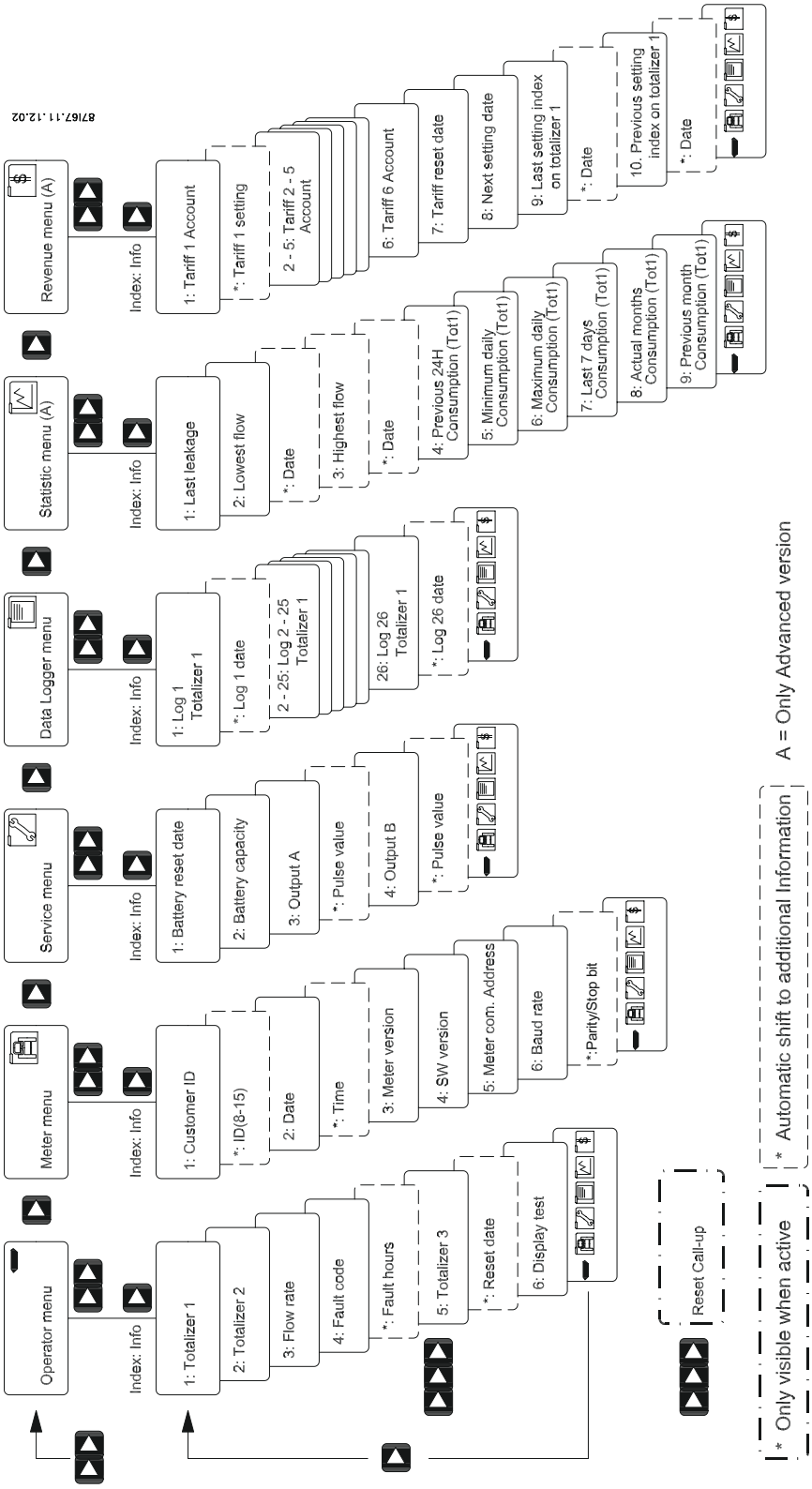

Figure 7-5 Menu overview

Index 1

Totalizer 1

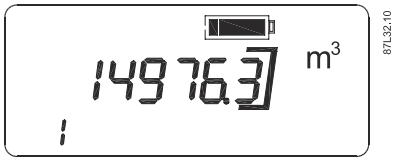

Figure 7-6 Operator menu - Totalizer 1

Flow volume totalizer 1 (factory-configured for forward flow calculation).

For MAG 8000, the value of totalizer 1 can be reset to zero or set to any value desired via PDM or Flow Tool (example - replacing an existing old meter).

Index 2

Totalizer 2



Figure 7-7 Operator menu - Totalizer 2

Flow volume totalizer 2 (factory-configured for reverse flow). A negative value indicates reverse flow calculation.

For MAG 8000, the value of totalizer 2 can be reset to zero or set to any value desired via PDM or Flow Tool (example - replacing an existing old meter).

Index 3

Flow rate

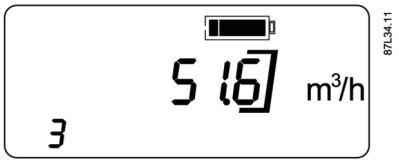

Figure 7-8 Operator menu - Flow rate

Index 3 shows actual flow rate. If a negative value is indicated, flow is in reverse direction.

Note

Totalizer value differences

The last digit on the display may differentiate from SIMATIC PDM and Flow Tool. This is because on the display the values are truncated after the last digit, while in SIMATIC PDM and Flow Tool the last digit is rounded.

Note

Totalizer 3

- FW 3.09 and earlier: Customer resettable totalizer (following totalizer 1).
- FW 3.11 and later: Net totalizer protected by HW key in MAG 8000 CT.

MAG 8000 CT

Note

Reset of totalizer 1 or 2

For MAG 8000 CT, the value of totalizer 1 or 2 can only be reset to zero if verification sealing is broken and a hardware key is mounted on device. This is only allowed to be done by an authorized person, with the acceptance and under direction of the local authorities.

Index 4

Active alarm

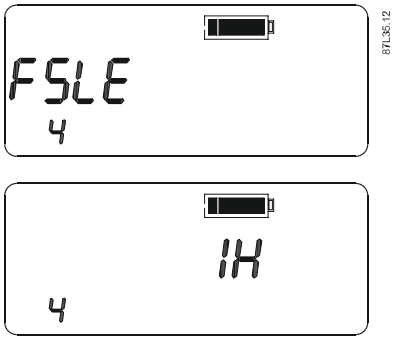

Figure 7-9 Operator menu - Active alarm

Faults are indicated with the lowest number first. The left of display indicates 3 alarm conditions: low power warning (5), leakage warning (L), and empty pipe warning (E).

Faults 1 to 4 affect meter performance and remain active until alarm condition disappears. Faults 5 to d are warnings that will disappear when alarm condition has been corrected and they are reset via communication interface.

Fault evaluation and service guidelines are made in service section.

After all faults have disappeared, display shows total hours of faults until meter was reset.

Fault information. Each number indicates a dedicated fault:

1	Insulation fault
2	Coil current fault*)
3	Amplifier overload fault*)
4	Data base checksum fault
5	Low power warning (alarm limits are configurable)
6	Flow overload > Qmax. (Q4) (125% Qn) flow overload
7	Pulse output 1 overflow > PF [Hz] pulse output 1 overflow
8	Pulse output 2 overflow > PF [Hz] pulse output 2 overflow
9	Consumption interval warning (alarm limits are configurable)
L	Leakage warning (alarm limits are configurable)
E	Empty pipe / low conductivity - when enabled*
C	High conductivity / low impedance warning (alarm limits are configurable)
d	High flow rate warning (alarm limits are configurable)
A	Reverse high flow rate warning (alarm limits are configurable)

*) Meter disables measurement to reduce power consumption during fatal faults.

Index 5

Customer totalizer



Figure 7-10 Operator menu - Totalizer

The value of the customer totalizer can be reset to zero or set to any other value through SIMATIC PDM or Flow Tool.

For the CT version the totalizer is neither configurable nor resettable.

Display test

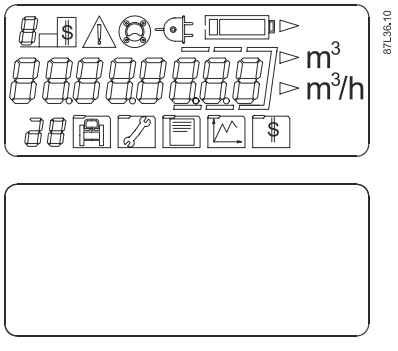

Figure 7-11 Operator menu - Display test

All segments of display are alternately flashed on and off during this test.

Menu selection

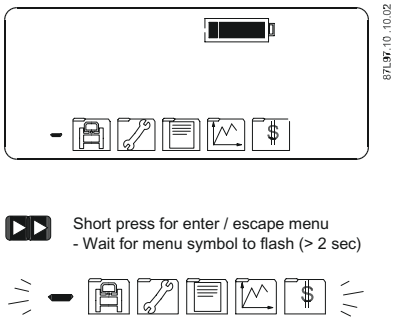

Figure 7-12 Operator menu - Menu selection

If key is pressed shortly (2 to 5 seconds), menu selection will flash indicating that a new selection can be made.

After toggling to desired menu, a short press on key will enable chosen menu, which must be activated in parameter 130 in advance.

Index 0 (when active)

Call up reset

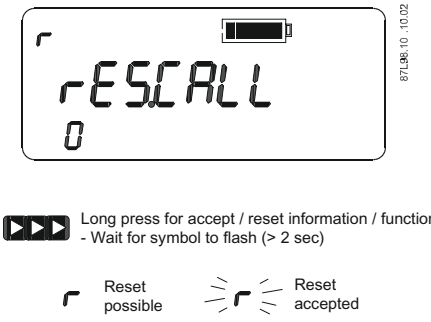

Figure 7-13 Operator menu - Call up reset

Call-up reset window (index 0) is only shown when call-up function is activated. "r" indicates that it can be reset by a long press on key. When releasing key while "r" is flashing, call-up function will be reset and window disappears.

7.5 Internal data handling

Meter status

Meter status parameter (120) gives a fast indication of reliability of revenue data.

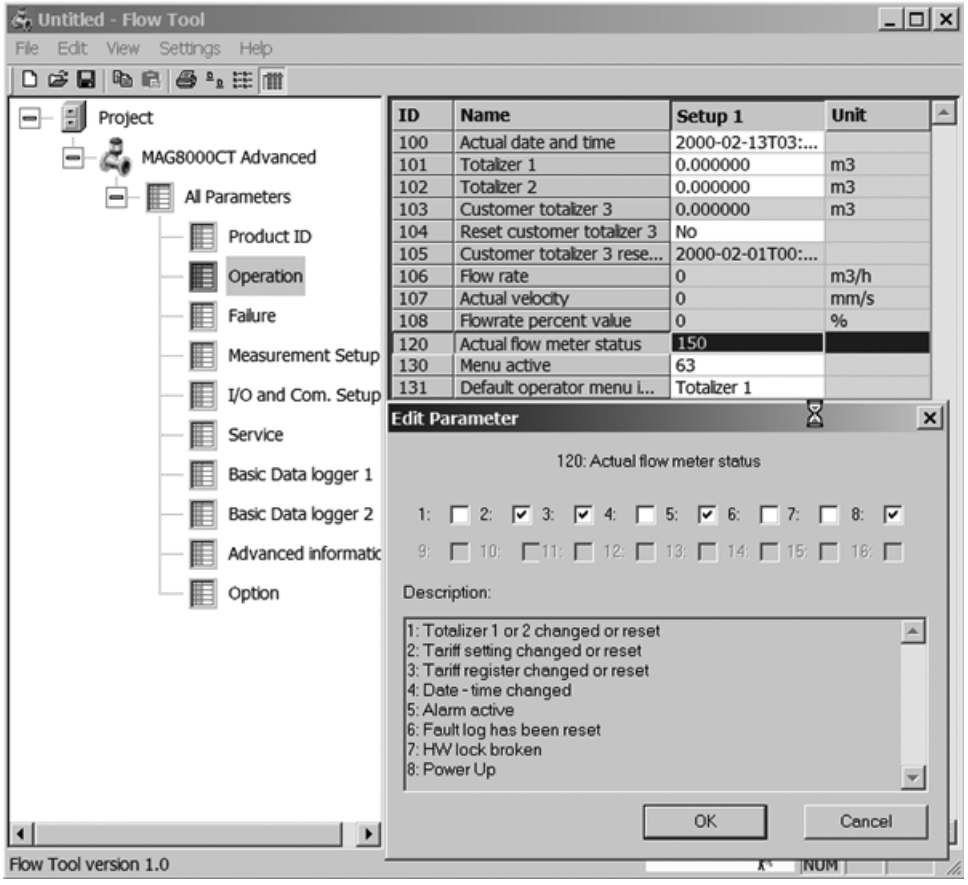

Data logger / Consumption alarm

The integrated data logger has 26 logging periods in which data can be stored daily, weekly or monthly. The logger stores the consumption for totalizer 1 and totalizer 2 in the selected period. Forward consumption is stored as a positive value and reverse consumption is stored as a negative value. Alarm and meter status are also stored for the same period to indicate alarms that have been active, or that revenue data has been influenced in the specific period.

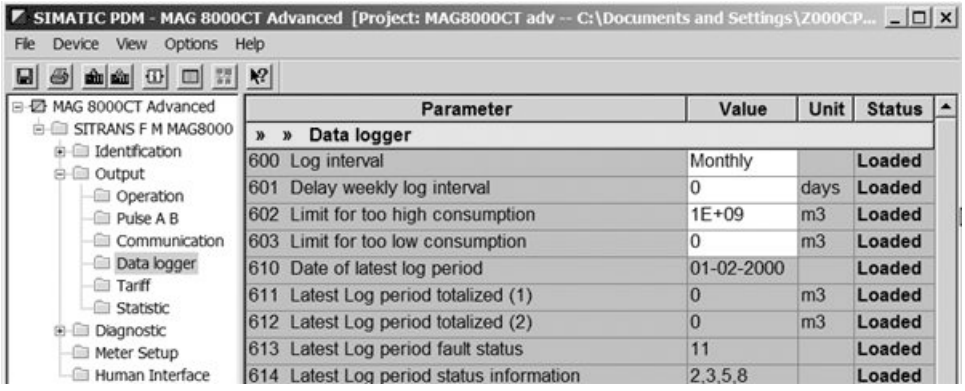

The logged information has a time and date stamp. The data logger never stops storing data - old data is overwritten following the first in/first out principle, i.e. log 1 is the last stored information which is moved to log 2 when the next logging is made and so on.

The consumption alarm indicates that the actual consumption on totalizer 1 is above or below the consumption limits.

Note

Invalid log date

If the log date "00.00.2000" is shown in the device display, the log period was never set.

7.6 Battery-powered operation

The MAG 8000 Standard (7ME6810) and MAG 8000 CT (7ME6820) are factory-configured for 7 years of typical operation on internal battery pack (2 D-cell). High or low temperature, frequent use of IrDA communication, high pulse output rate, high excitation frequency in leakage detection mode, and use of add-on communication module will reduce actual operation time.

The MAG 8000 power management function controls each power consuming element and measures the temperature for optimal calculation of remaining battery power capacity.

Battery status and alarm indication

Battery power capacity for operation is indicated in 3 levels.

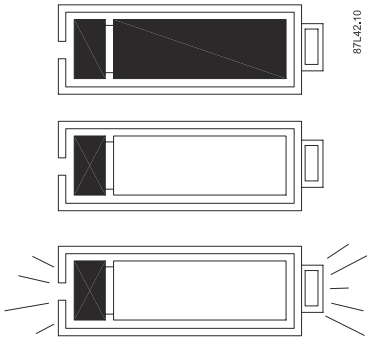

Figure 7-14 Battery status

- Full symbol indicates battery capacity is above battery alarm level (% preset parameter 206).
- Low symbol indicates that battery should be replaced; however, measurement will remain active. Level is based on a preset alarm level.
- When low symbol is flashing, measurement and communication is disabled until battery pack has been replaced and reset.

"Low battery" is a selectable % (parameter 206) of 100% full capacity. The meter calculates the remaining capacity every four hours, including all consuming elements and the influence of temperature changes.

Consumption and operation time calculation

Battery operation time depends on connected battery pack as well as operation conditions of meter. Every 4 hours the advanced power management system calculates the real power consumption and remaining operation capacity.

Power consumption calculation includes flow measurement, meter dialog (communication and display) and pulse output.

Temperature is also measured to control and adjust its influence on the battery capacity.

The internal 2 D-cell battery pack has a nominal capacity of 33 Ah giving a typical operation of 7 years for MAG 8000 Standard and MAG 8000 CT. The nominal capacity of external

battery pack (4 D-cell) is 66 Ah and gives typically 10 years operation time for MAG 8000 Standard and MAG 8000 CT.





Scenario - Revenue application	
Output A	Pulse - 10 Hz
Output B	Alarm or Call up
Meter dialog	1 hour per month
Excitation frequency	1/15 Hz
Country main frequency	50 Hz / 60 Hz

MAG 8000 Standard (7ME6810) and MAG 8000 CT (7ME6820)

Excitation frequency (24 hours operation)		**1/60 Hz**	**1/30 Hz**	**1/15 Hz**	**1/5 Hz**	**1.5625 Hz**	**3.125 Hz**	**6.25 Hz**
Two D-Cell battery 33 Ah Internal battery pack	DN 25 to 150 (1" to 6")	9 years	9 years	7 years	43 months	8 months	3 months	2 months
	DN 200 to 600 (8" to 24")	9 years	6 years	4 years	22 months	3 months	1 month	N/A
	DN 700 to 1200 (28" to 48")	7 years	4 years	2 years	1 year	1 month	N/A	N/A
Four D-Cell battery 66 Ah External battery pack	DN 25 to 150 (1" to 6")	15 years	15 years	14 years	86 months	16 months	7 months	4 months
	DN 200 to 600 (8" to 24")	15 years	13 years	8 years	44 months	7 months	3 months	N/A
	DN 700 to 1200 (28" to 48")	14 years	9 years	5 years	2 years	3 months	N/A	N/A

Typical operation time of 7 years is based on an operation time/temperature profile of 5% at 0 °C (32 °F), 80% at 15 °C (59 °F) and 15% at 50 °C (122 °F), 0.1 % at menu 3 operation and 0.1 % at IrDA operation, and no use of add-on communication module.

Leakage detection (advanced version only) will affect battery operation time if a higher excitation frequency is selected during leakage period.

The effect of other temperatures is shown in the figure below.

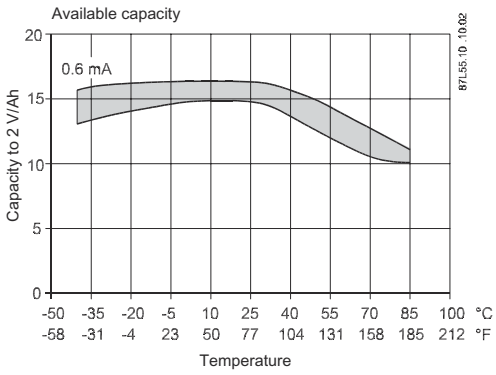

Figure 7-15 Available capacity of one D-cell battery in relation to discharge current and temperature

Note

Installation orientation of battery pack may influence battery capacity. Optimal battery capacity is achieved with battery pack in an upright position.

Note

Stop Modbus communication before changing the battery

In order to avoid a checksum error, stop Modbus communication before changing the battery.

Battery configuration

The battery figures show power management information, which can be accessed via "Device" → "Power".

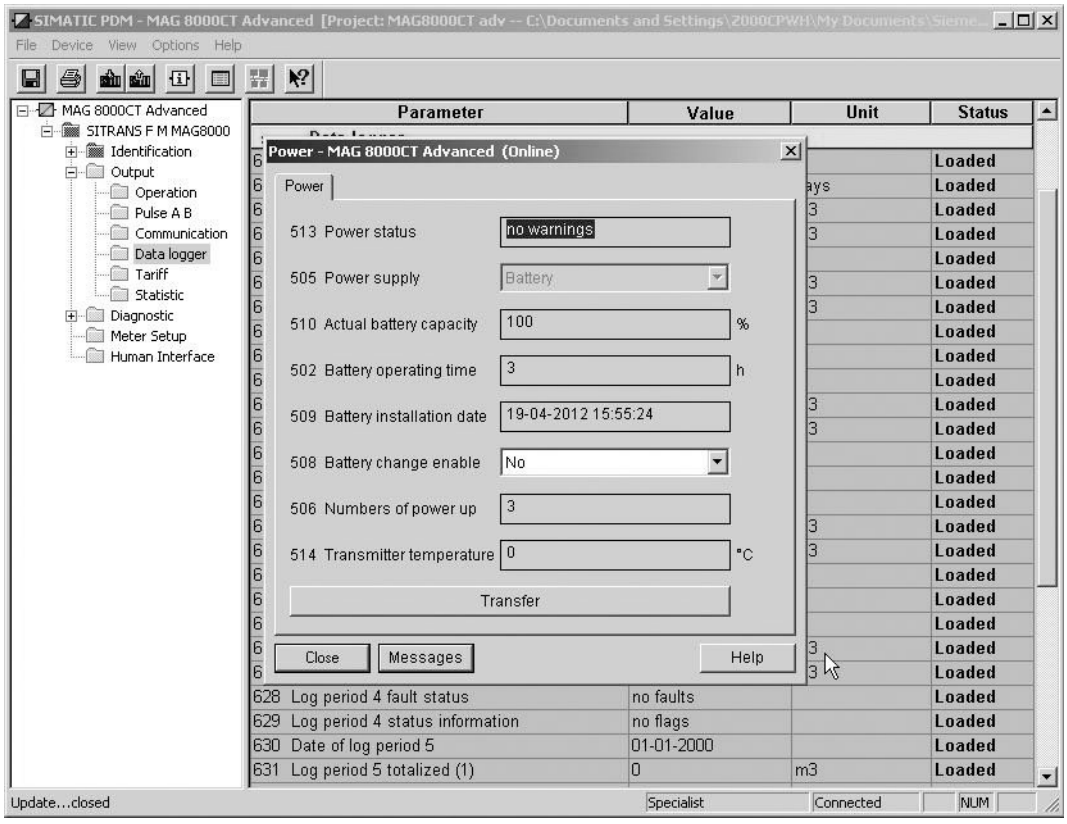

At each battery replacement the actual battery capacity is reset to 100% (parameters 508 to 510), which is then reduced with real meter consumption every 4 hours.

Power related alarm settings are located in "Alarm" group, e.g. "Battery limit" (parameter 206), which is the level at which low power alarm is activated generating an alarm or call-up (if configured), as well as low power fault related parameters 230 to 234.

When switching between battery power from the internal and the external battery packs, "Battery power" (parameter 507) must be adjusted to match the actual number of batteries connected.

Service and maintenance

8

8.1 Maintenance

The device is maintenance-free. However, a periodic inspection according to pertinent directives and regulations must be carried out.

An inspection can include check of:

- Ambient conditions
- Seal integrity of the process connections, cable entries, and cover screws
- Reliability of power supply, lightning protection, and grounds

Note

Siemens defines flow sensors as non-repairable products.

⚠ WARNING

Impermissible repair and maintenance of the device

- Repair and maintenance must be carried out by Siemens authorized personnel only.

8.2 MAG 8000 service guidelines

The MAG 8000 battery-operated water meters are based on a very reliable measurement technology and the advanced alarm monitoring and diagnostics provide valuable information concerning the meter performance, faults, and service conditions.

Optimal meter performance requires proper meter selection, proper installation, and proper commissioning for the particular application. This service guideline section indicates how to detect and solve the most common problems. Meter and application problems are indicated by the alarm program via the main fault and warning symbol on the display and the comprehensive data logging and monitoring available via the communication interface.

Alarm monitoring includes individual registration of each alarm, how many hours the alarm has been active, when the alarm first appeared, and when it disappeared last. The alarm log can be reset with its own date and time registration. A common fault hour counter includes all active alarms in one counter. Additionally, active alarms are logged in the data logger to monitor when the alarms have been activated.

Fatal faults 1 through 4 are the most important to resolve as they influence the operation of the meter. Fatal faults will disappear as soon as the alarm condition is corrected.

8.3 Replacing transmitter or PCB board

The MAG 8000 and MAG 8000 CT do not have a removable SENSORPROM. Therefore special care must be taken when replacing a damaged or defective transmitter or PCB board to ensure proper operation and continued accuracy. There are 3 ways to achieve an easy and successful replacement meter:

1. Order a transmitter replacement kit as a spare part, which comes with the factory default settings and original product label. To order you need to provide a serial number 087L4166 is for compact version, 087L4202 is for remote version.
2. Order a complete transmitter as a spare part with default settings and a blank product label. Final configuration is done on-site. Missing data and configuration can be uploaded from the old meter, or it can be read from the old meter product label.
3. Order only a replacement PCB board. The PCB board can only be ordered for basic or advanced versions with default settings. When making the configuration on-site, the service mode must be selected in the Flow Tool/SIMATIC PDM and the hardware key must be mounted on the PCB board, to change important parameters.

Note

Re-verification

If MAG 8000 CT transmitter or sensor must be replaced, a re-verification of the whole water meter is necessary, to re-obtain custody transfer approval. The re-verification must be performed by an authorized person, with the acceptance and under direction of the local authorities.

Note

SITRANS F M Verificator

The SITRANS F M Verificator cannot be used with MAG 8000.

8.4 Battery replacement

Condition

Only use the following battery type supplied by Siemens:

Internal battery pack (2D cells): A5E50698081 or FDK:087L4150

External battery pack (4D cells): A5E50698048 or FDK:087L4151

Ordering of spare parts (Page 121)

Replacing battery

1. Loosen screws on transmitter top.
2. Remove transmitter top using a screwdriver.

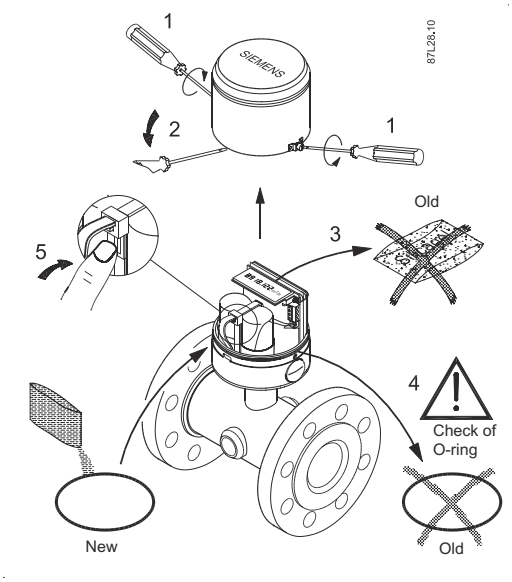

3. Dispose of silica gel bag.
4. Replace O-ring to ensure continued IP68 enclosure rating.
   – Check O-ring for damage or deformity.
   – Smear O-ring with acid-free lubricating gel.
5. Push locking tab and loosen strip.

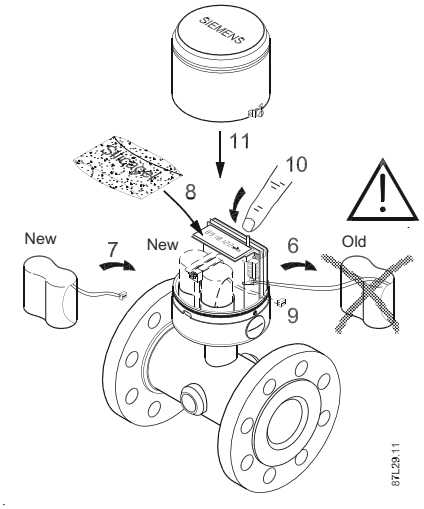

6. Remove battery pack with power still connected.

7. Place and secure new battery pack.

Note

Battery packs must be installed with the top part in upwards direction to reach maximum capacity.

8. Add new Silica gel bag
   - Remove plastic bag from new silica gel bag.
   - Place new silica gel bag on top of battery pack to prevent condensation within meter.
   - To maintain IP68 enclosure the silica gel bag may **not** be in contact with the potting compound.
9. Disconnect old battery pack and connect new one.
10. Press key within 6 seconds to reset battery (i.e. operating time and remaining capacity) when display shows:

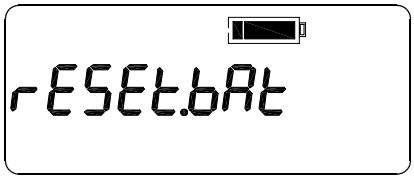

11. Mount top lid.
12. Fasten screws to reassemble meter completely.

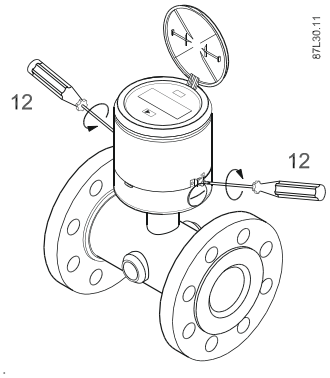

If necessary, adjust time and date via software, see "Power up with battery reset, date and time set up".

Note

Re-verification

All sealed MAG 8000 CT meters must be re-verified when sealings (marked "A") have been broken. The re-verification must be performed by an authorized person, with the acceptance and under direction of the local authorities.

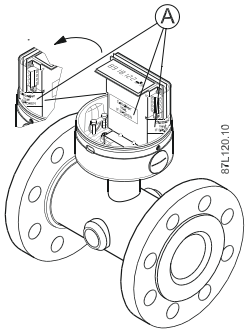

Figure 8-1 Verification sealings

8.5 Power up with battery reset, date and time set up

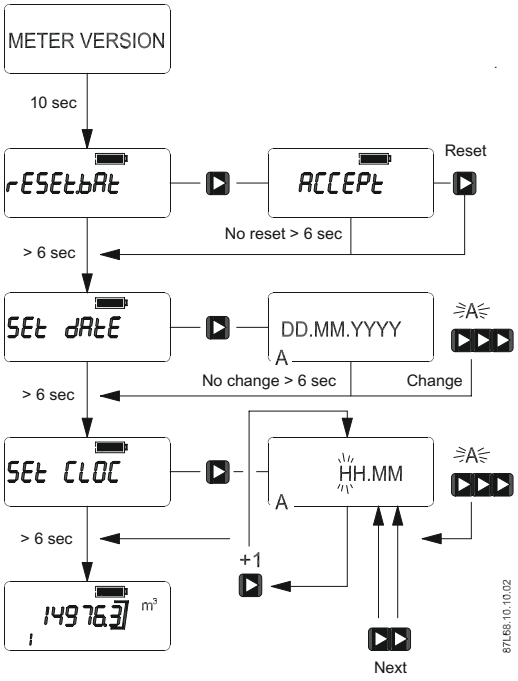

When new batteries have been installed, power-up procedure will enable resetting battery capacity and setting up date and time. Battery capacity reset, date and time can also be corrected via parameters 508 and 100.

When battery plug is connected, meter will display meter version for 10 seconds. Display will then show "rESEt.bAt" indicating the option to reset internal battery power calculation. To execute reset, press key within 6 seconds. If key is not pressed, meter will proceed to set date, set clock, and finally normal operation mode.

If key is pressed within reset battery time, display will indicate "Accept" to ensure that reset should take place. Reset will take place only if key is pressed again within the next 6 seconds. If not, normal operation will begin.

For setting up date and time, the different key function must be used - see Operator menu (Page 66). An "A" indicates an acceptable value and a flashing "A" indicates that value is stored when key is released.

Reset function also sets actual date as battery replacement date.

8.6 Verification mode

Verification mode increases measurement frequency to provide maximum measurements per second. All other parameters stay the same. This function is especially useful to minimize calibration time when validating water meter accuracy. Frame around digits will blink slowly to indicate that verification mode is enabled. Maximum pulse rate on output A is increased to 1 kHz and pulse width is set to 0.5 ms. When verification mode is exited the previous pulse setting is restored. Pulse widths other than 1 ms can be selected by storing new pulse values. This setting remains when verification mode is exited.

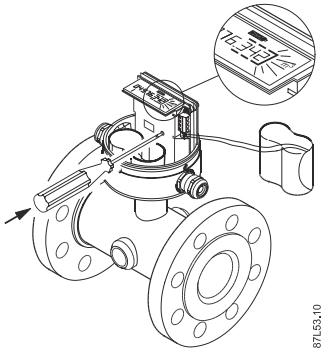

Activation of verification mode

Verification mode is enabled in one of the following ways:

- Pressing verification button through hole in front screen.
- Writing integer '1' to parameter 320.

Verification mode

The following indicate that meter is in verification mode:

- Frame surrounding digits in LCD starts flashing.
- Excitation frequency is set to maximum allowable frequency.
  - (ExcitationFreqNo = ExcitationFreqNoLimit)
- Resolution in display is set to 3 digits after decimal point.
  - (DecimalPoint = 3)

Deactivation of verification mode

Verification mode is deactivated in one of the following ways:

- Pressing verification button again.
- Writing integer '0' to parameter 320 (Calibration mode).

Verification mode automatically stops after 4 hours, unless manually deactivated.

8.7 Transport

NOTICE
Transport with fitted battery If the battery is still present in the device when transporting, it could become loose as a result of vibrations and cause damage within the device. • Remove the batteries before returning the device. • Dispose of the batteries according to regulations or include them separately in the return consignment.

8.8 Return procedure

To return a product to Siemens, see Returns to Siemens (www.siemens.com/returns-to-siemens).

Contact your Siemens representative to clarify if a product is repairable, and how to return it. They can also help with quick repair processing, a repair cost estimate, or a repair report/ cause of failure report.

NOTICE
Decontamination The product may have to be decontaminated before it is returned. Your Siemens contact person will let you know for which products this is required.

Note

Return of products with lithium batteries

Lithium batteries are dangerous goods according to the Regulation of Dangerous Goods, UN 3090 and UN 3091.

- Remove lithium batteries prior to shipment.
- If the battery cannot be removed, return the product according to the Regulation of Dangerous Goods with special transport documentation.

8.9 Disposal

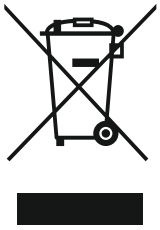

Devices described in this manual should be recycled. They may not be disposed of in the municipal waste disposal services according to the Directive 2012/19/EC on waste electronic and electrical equipment (WEEE).

Devices can be returned to the supplier within the EC and UK, or to a locally approved disposal service for eco-friendly recycling. Observe the specific regulations valid in your country.

Further information about devices containing batteries can be found at: Information about battery / product return (WEEE) (https://support.industry.siemens.com/cs/document/109479891/)

8.9.1 Battery disposal



In accordance with EU directive 2006/66/EC, batteries are not to be disposed of via municipal waste disposal services.

Waste industrial batteries from our products are accepted back by Siemens and by the local Siemens representatives. Please follow the return procedures (Page 85) of Siemens or talk to your local Siemens partner.

Diagnostics and Troubleshooting

9

9.1 Fault codes

Error system

MAG 8000 can detect and report 13 different faults.

The faults are divided into two types: Fatal errors and Warnings.

Fatal errors: Faults 1, 2, 3, and 4

Warnings: Faults 5, 6, 7, 9, L, E, C, d, and 14

Fault codes	Name/text	Description	Cause	Remedy
1	**Insulation fault**	"Cross-talk" between coil circuit and electrodes. An insulation fault will result in a offset error on flow measurement (Advanced version only)	• Defect cables between sensor and transmitter • Wrong connections of remote cables • Water between coils and electrodes – could be caused by a broken liner • Pollution/moisture on PCB caused by water in encapsulation	Check cable and wiring installation and disturbing elements in the surrounding. Re-activation of insulation test (parameter 800) will reset alarm and start a new insulation test. During the 4 minute insulation test, measurement is disabled. Alarm remains active until a new test period detects no failures.
2	**Coil current fault**	Error in the coil circuit. Coil current has not settled within specified period. A short-circuit in the coil can **NOT** be detected	• Coils have been disconnected could be caused by broken cable or wires	Check cable and wiring installation. Alarm remains active until the fault condition is corrected.
3	**Amplifier overload**	Input signal is outside expected range. Input amplifier circuit can not provide a stable measurement. A short circuit between the two electrodes or between a electrode and common can NOT be detected	• Electrodes have been disconnected, or connected to ground	Check cable and wiring installation. Alarm remains active until the fault condition is corrected.

Fault codes	Name/text	Description	Cause	Remedy
4	**Database checksum**	Corrupted data in eeprom detected by checksum test made during power-up	• Power failure during Eeprom write	1. Reset checksum repair alarm via parameter 560 and check data. – All data is checked after operation (e.g., new flow calculation, writing to the EEprom, etc.) with a checksum control. If the checksum result fails, data will not be considered as valid and repair data must be made. 2. If data is wrong or checksum error reoccurs, replace the PCB board. The alarm is active until the fault condition is corrected.
5	**Low Power Alarm**	Battery capacity is below preset threshold (default 10%). Power up (temporary warning – will disappear after 4 hours)	• Battery capacity low • Meter has been powered up	Check calculated battery capacity (parameter 510) versus battery alarm limit (parameter 206) and replace batteries if necessary Flow measurement and communication stop, but display remains active as long as power is available. The alarm remains active until the fault condition is resolved.
6	**Flow Overload**	Flow rate has exceeded 125% of Q3	• Wrong sizing – flow sensor too small	Check meter sizing for actual installation Alarm remains active until fault condition is resolved.
7	**PulseA overload**	Duty cycle of output A has exceeded maximum possible of 50	• Wrong settings for output A	Change volume per pulse to a higher value - see Technical data (Page 99) for pulse selection. Note: Pulse A is limited to 100Hz. The alarm remains active until output pulse rate drops below maximum pulse rate.
9	**Consumption Interval**	Accumulated volume on totalizer 1 during data log period has exceeded the too low or too high consumption limit	• Flowrate higher or lower than expected • Wrong parameter setup	Check data logger values and consumption limit. Alarm remains active until it is manually reset via parameter 209.
L	**Leakage**	Lowest flow rate or volume during leakage period has exceeded leakage detection settings	• Leakage in water network	Check setting and pipe installation. Alarm is active until it is manually reset by parameter 208. Alarm reset resets information as does leakage period reset (parameter 820).
E	**Empty Pipe**	Measured electrode impedance has exceeded the empty-pipe detection level (parameters 540, 541 and 334)	• Pipe is not filled with water	Ensure sensor is filled with water. Alarm remains active until fault condition is resolved.

Fault codes	Name/text	Description	Cause	Remedy
C	**Low Impedance**	Measured electrode impedance is below low impedance threshold (parameter 542), i.e. water has a high conductivity	• Water is polluted (e.g. saltwater in fresh water)	- Alarm is active until water resistance is above low media alarm limit.
d	**Flow Limit**	The forward flow rate is greater than the high flow alarm limit (parameter 553).	• Water network failure – pipe burst	- Alarm remains active until flow rate drops below flow alarm limit.
A	*Reverse Flow Limit*	*Reverse flow rate is below a preset threshold (default -1E9)*	• *Water network failure – non-return valve is broken*	- Alarm remains active until reverse flow rate drops below reverse flow alarm limit.

Note

Reset of fault log (parameter 204) also resets all alarms. Once reset, only active alarms become visible again.

9.2 Built-in functions

Empty pipe detection

Electrode impedance is measured with 800 Hz at 50 Hz mains frequency (960 Hz at 60 Hz mains frequency). This is done by toggling the electrode control pin every 6 respectively 5 samples – the sample frequency is 9600 Hz. The impedance value is averaged over 100 measurements. The electrode impedance A and B are measured in turns.

The unfiltered impedance value (a fast warning indication) is compared with a limit and the empty pipe warning is reported when it exceeds this limit – but only if the detection is ON and if there is no overload failure.

During empty pipe detection the coil current is held OFF and the flow value is forced zero.

Default settings for Electrode Impedance Limit is 25 000 ohm corresponding to a water conductivity of 20 µS/cm (10 000 ohm ≈ 50 µS/cm)

Insulation test

Insulation measurement is working like the normal measurement by excitation of the magnetic coils in the sensor. Value is checked against a default limit of 2.5 mm/s. A value above this limit results in a failure report. The "Insulation upper limit" can be adjusted through SIMATIC PDM or Flow Tool.

Measurement will NOT stop if an insulation fault occurs.

The last flow value is used for totalization during insulation test.

Insulation test interval according to register "Insulation Test Interval". Minimum 1 day between tests.

The insulation test can be enabled/disabled with register "Insulation Test".

When the insulation test is enabled the test starts immediately. All following insulation tests will start at 00:00:00 (midnight).

Duration of insulation test is 2 min 42 sec (1024 samples @ 6.25 Hz)

Insulation test will always be made with an excitation frequency of 6.25 Hz.

Note

For firmware versions < 3.07: The insulation test cannot be enabled in the basic versions of MAG 8000 and MAG 8000 CT.

Coil-current test

When H-bridge is turned and just before making samples (4 times each measurement), the coil current is checked via a comparator. If the coil current is not settled, a failure is reported.

During coil current failure the flow value is forced zero.

Amplifier test

Overload is possible both from the AD conversion of sensor signal and from the pre-amplifier. These checks are made at each sample and if one of the sample fails with an overload, this measurement is cancelled and a failure is reported.

During overload detection the coil current is held OFF and the flow value is forced zero.

Checking facilities

The MAG 8000 and MAG 8000 CT are equipped with checking facilities of types P, I, and N. (in OIML R49). The automatic checks are performed without operator intervention.

Type P permanent checking facilities are automatic checks performed constantly during meter operation. They include:

- Coil current test
- Amplifier test
- Empty pipe test
- Flow overload
- Pulse overload

Type I intermittent checking facilities are automatic checks performed at certain time intervals or per fixed number of measurements. They include:

- Checksum calculation (10 min. interval on totalizer checksum)
- Insulation test (minimum 24 hour interval)
- Battery capacity check (4 hours interval)

Type N non-automatic checking facilities are checks that are **not** performed automatically including all other diagnosis functions in the MAG 8000 and the MAG 8000 CT.

9.3 Flow simulation

MAG 8000 and MAG 8000 CT has a built-in flow simulator (parameters 551 and 552) to verify and adjust pulse output to any connected device or system.

⚠ **WARNING**
Totalized values are changed during simulation and actual flow is NOT measured.
Simulation will stop automatically in 4 hours.
For MAG 8000 CT flow simulation is forbidden.

Technical specifications

10

10.1 MAG 8000 water meter

Note

Further information

For further information, see certificates. (http://www.siemens.com/processinstrumentation/certificates)

Meter		MAG 8000 Standard (7ME6810)	MAG 8000 CT (7ME6820)
Accuracy	Standard calibration	± 0.4% of rate ± 2 mm/s	-
	Extended calibration	± 0.2% of rate ± 2 mm/s	-
	OIML R49:2013	-	Class 1 (DN50-DN600) and Class 2 (DN50-DN600)
	MI-001 according to 2014/32/UE	-	Q3/Q1<100 (DN50-DN300 all orientation), Q3/Q1=200 (DN350-DN600 horizontal)
	NMI (Australia)	± 2.5% (Q1 ≤ Q ≤ Q4)	-
Media conductivity		Clean water > 20 µs/cm	
Temperature	Ambient	–20 to +60 °C (–4 to +140 °F)	–25 to +55 °C (–4 to +131 °F)
	Media	0 to 70 °C (+32 to +158 °F)	0.1 to 50 °C (+32 to +122 °F)
	Storage	–40 to +70 °C (–22 to +158 °F)	–40 to +70 °C (–22 to +158 °F)
Rated operating conditions	Device installation	indoor / outdoor / wet locations	
	Air humidity	max. 100 %	
	Altitude	max. 2000 m	
	Overvoltage category	II	
	Pollution degree	2	
Enclosure		IP68/NEMA 6P rating. Cable glands mounted requires potting kit to remain IP68/NEMA 6P, otherwise IP67/NEMA 4 rating is obtained. Factory mounted cable provides IP68/NEMA 6P rating	

Meter		MAG 8000 Standard (7ME6810)	MAG 8000 CT (7ME6820)
Approvals	Drinking water approvals	NSF 61 (cold water) USA WRAS (BS 6920 cold water) UK ACS Listed France DVGW W270 Germany Belgaqua (B) AS/NZS 4020	NSF 61 (cold water) USA WRAS (BS 6920 cold water) UK ACS Listed France DVGW W270 Germany Belgaqua (B) AS/NZS 4020 KIWA
	Custody transfer approval	NMI	OIML R49:2013 OIML R 49 MI-001 (DK-0200-MI001-011) NMI KIWA
Conformity		-	ISO 4064
	PED	2014/68/EU	
	EMC	EN 61326-1:2020	
	FM Fire Service	Class Number 1044	

For further features, see "Features" (Page 171).

10.2 Sensor

Technical specifications

Sensor		MAG 8000 (7ME6810)	MAG 8000 CT (7ME6820)
Size, flange and pressure range	EN 1092-1 (DIN 2501)	DN 25, DN 40, DN 350 - DN 600: PN 40 DN 50 to 150: PN 16 DN 200 to 1200: PN 10 or PN 16 DN 350 - DN 600: PN 25	DN 50 to 600: PN 16
	ANSI 16.5 Class 150 lb	1" to 24": 20 bar (290 psi)	2" to 24": 16 bar (232 psi)
	AWWA C-207	28" to 48": PN 10	-
	AS 4087	DN 50 to 1200: PN 14	DN 50 to 600: PN 16
	AS 2091-1 Table D	-	-
	AS 2191 Table E		

Sensor		**MAG 8000 (7ME6810)**	**MAG 8000 CT (7ME6820)**
Max. excitation frequency Basic version	Battery-powered	1/15 Hz for sensor size DN 25 to 150 (1" to 6") 1/30 Hz for sensor size DN 200 to 600 (8" to 24") 1/60 Hz for sensor size DN 700 to 1200 (28" to 48")	1/15 Hz for sensor size DN 50 to 150 (1" to 6") 1/30 Hz for sensor size DN 200 to 600 (9" to 24")
	Mains-powered	6.25 Hz for sensor size DN 25 to 150 (1" to 6") 3.125 Hz for sensor size DN 200 to 600 (8" to 24") 1.5625 Hz for sensor size DN 700 to 1200 (28" to 48")	6.25 Hz for sensor size DN 25 to 150 (1" to 6") 3.125 Hz for sensor size DN 200 to 600 (8" to 24")
Max. excitation frequency Advanced version	Battery-powered	1/15 Hz for sensor size DN 25 ... 150 (1" ... 6") adjustable up to 6.25 Hz 1/30 Hz for sensor size DN 200 ... 600 (8" ... 24") adjustable up to 3.125 Hz 1/60 Hz for sensor size DN 700 ... 1200 (28" ... 48") adjustable up to 1.5625 Hz	1/15 Hz for sensor size DN 50 ... 150 (2" ... 6") adjustable up to 6.25 Hz 1/30 Hz for sensor size DN 200 ... 600 (8" ... 24") adjustable up to 3.125 Hz
	Mains-powered	6.25 Hz for sensor size DN 25 ... 150 (1" ... 6") 3.125 Hz for sensor size DN 200 ... 600 (8" ... 24") 1.5625 Hz for sensor size DN 700 ... 1200 (28" ... 48")	6.25 Hz for sensor size DN 25 ... 150 (1" ... 6") 3.125 Hz for sensor size DN 200 ... 600 (8" ... 24")
Liner		EPDM	EPDM
Electrode and grounding		Hastelloy C276	Hastelloy C276

10.3 Transmitter

Transmitter		**MAG 8000Standard (7ME6810)**	**MAG 8000 CT (7ME6820)**
Installation		Integral (compact) or remote with factory-mounted cable in 5, 10, 20 or 30 m lengths with IP68/NEMA 6P connectors. Connection is made at the transmitter bottom.	
Material	Top housing	Stainless steel (AISI 316)	
	Wall mounting bracket	Stainless steel (AISI 304).	

Transmitter		**MAG 8000Standard (7ME6810)**	**MAG 8000 CT (7ME6820)**
Display and key	Display	8 digits for main information. Index, menu and status symbols for dedicated information	
	Key	For toggling through information and resetting of customer totalizer and call-up function	
	Menus	Selectable default information and accessible menus: - Operator - Meter - Service - Data Logger - Statistic (Advanced version only) - Revenue and Tariffs (Advanced version only)	
	Resolution	Totalized information can be displayed with 1, 2 or 3 decimals or automatic adjustment for maximum resolution	
Flow unit	Europe std.	Volume: m^3 Flow rate: m^3/h	
	US std.	Volume: Gallon Flow rate: GPM	Volume: m^3 Flow rate: m^3/h
	Australia std.	Volume: ML Flow rate: ML/d	Volume: m^3 Flow rate: m^3/h
	Other selectable units	Volume: m^3 x 100, L x 100, G x 100, G x 1000, MG, CF x 100, CF x 1000, AF, Al, kL, BBL42 Flow rate: m^3/min, m^3/h, m^3/d, L/s, L/min, L/h, ML/d, GPS, GPH, GPD, MGD, GPM, CFS, CFM, CFH, BBL42/s, BBL42/min, BBL42/h, BBL42/d Other units than m^3 and m^3/h (ordered from factory or manually configured on-site by changing scaling factors) are shown by a label stuck onto display	-
Digital output	Nos.	2 passive outputs (MOS), individually galvanically isolated (max. 1.5 mm^2)	
	Load	Max. ± 35 V DC, 50 mA short circuit protected	
	Output A	Programmable as: Pulse volume, Forward, Reverse, Forward/net, Reverse/net	
	Output B	Programmable as: Pulse volume, Forward, Reverse, Forward/net, Reverse/net , Alarm, Call-up	
	Pulse rate	Pulse A: Max. 100 Hz Pulse B: Max. 50 Hz	
	Pulse width	5, 10, 25, 50, 100, 500 ms	

Transmitter		**MAG 8000Standard (7ME6810)**	**MAG 8000 CT (7ME6820)**
Communication	IrDA	Standard integrated infrared communication interface with MODBUS RTU protocol	
	Add-on modules	RS 232 serial interface with MODBUS RTU (Rx/Tx/GND), point to point with max. 15 m cable	
		RS 485 serial interface with MODBUS RTU (+/-/GND), multidrop with up to 32 devices with max. 1000 m cable	
		Encoder interface module (for Itron 200WP) "Sensus protocol"	
		Wireless communication module with or without analog input cable	

10.4 Power supply

Power supply		
Battery power supply [1]	Internal battery pack	1 D-Cell 3.6 V / 16 Ah
	Internal battery pack	2 D-Cell 3.6 V / 33 Ah
	External battery pack	4 D-Cell 3.6 V / 66 Ah
12-24 V AC/DC power supply	Input voltage range	12/24 V AC/DC (10 ... 32 V DC)
	Power consumption	2 VA
	Isolation	Class II
	Fuse	1000 mA T - Not replaceable
	Short circuit protection	Module is protected from short circuit on the output connector. Both during mains and backup supply
	Conformity	IEC 61010-1 OIML R49:2013 EMC: EN 61326-1
115 to 230 V AC mains supply	Input voltage range	115 to 230 V AC, +15% to –20%, 50-60 Hz
	Power consumption	2 VA
	Isolation	Class II
	Fuse	250 mA T - Not replaceable
	External circuit breaker[2]	10 A ... 16 A
	Short circuit protection	Module is protected from short circuit on the output connector. Both during mains and backup supply in the range of 10 A ... 16 A
	Conformity	IEC 61010-1 OIML R49:2013 EMC: EN 61326-1

Power supply		
Input cable for 12/24 V AC/DC and 115 to 230 V AC power supply	Factory-mounted PUR cable	2 x 1 mm² (brown, blue) Length = 3 m
	Resistance	Sunlight and water
	Outer diameter	7 mm (0.28")
	Rated voltage	300 ... 500 V AC
	Testing voltage	2000 V AC
	Temperature range	Fixed laying: –40 to +90 °C (-40 to 194 °F) Flexible application: –30 to +80 °C (-22 to 176 °F)
	Bending radius	Min. 28 mm (fixed installation)
	Pulling force	Max. 200 N
	Output	Socket
	Backup battery	Plug

[1] Lithium batteries are subject to special transportation regulations according to United Nations "Regulation of Dangerous Goods, UN 3090 and UN 3091". Special transport documentation is required to observe these regulations. This may influence both transport time and costs.

[2] Circuit breaker must be marked as the disconnecting device for the equipment

10.5 Modbus RTU

Siemens Flow Instruments Modbus RTU specification for add-on modules		
Device type	Slave	
Baud rates	1200, 2400, 4800, 9600, 19 200, 38 400 bits/sec.	
Number of stations	Recommended: max. 31 per segment without repeaters for RS 485	
Device address range	1 to 247	
Protocol	RTU (Other Modbus protocols like ASCII, Plus or TCP/IP are not supported)	
Electrical interface	RS 485, 2-wire and RS 232, 2-wire (max. 1.5 mm²)	
Connecter type	Screw terminals	
Supported function codes	1:	read coils
	3:	read holding registers
	5:	write single coil
	16:	write multiple registers
	17:	report slave ID
Broadcast	Yes	
Maximum cable length	1200 meters (@38 400 bps)	
Standard	Modbus over serial line v1.0	
Certified	No	
Device profile	None	

Siemens Flow Instruments Modbus RTU specification for add-on modules	
Add-on modules comply with	MODBUS over serial line specification & implementation guide v. 1.0 modbus.org 12/02/02 MODBUS application protocol specification v. 1.1 modbus.org 12/06/02
Isolation	500 V AC functional isolation of data signals and common

Add-on modules must be connected to equipment complying with "Low Voltage Directive" in order to be considered safe. The isolation within the MAG 8000 and MAG 8000 CT add-on MODBUS module is only functional isolation.

10.6 Output characteristics

This chapter describes how the MAG 8000 and MAG 8000 CT outputs work.

Output A and B as pulse volume

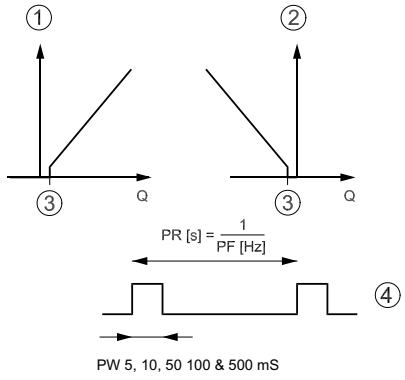

①	Forward	PR	Pulse rate
②	Reverse	PF	Pulse frequency
③	Cut-off	PW	Pulse width

MAG 8000

When output A or B is configured as volume per pulse, the output delivers a pulse when the preset volume based on either Forward/Reverse or Net Forward/Net Reverse flow has passed the sensor in the selected direction. The volume per pulse is freely scalable, from 0.000001 to 10 000 units per pulse, and should not exceed the pulse rate of the output configuration table.

MAG 8000 CT

The volume per pulse is defined in the MAG 8000 CT version to 0.001 or 0.01 or 0.1 or 1 m^3 per pulse.

Output B as alarm output

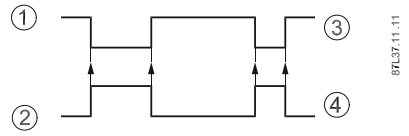

① Alarm output
② Alarm status
③ On - Off
④ No Error

MAG 8000

When output B is configured as an "alarm" output, it will follow the internal alarms that were previously chosen in the Alarm Configuration List (Page 55).

Note

Alarm output is inverted to a pulse output providing an alarm if power disappears or cable connection is interrupted.

Output B as call-up output

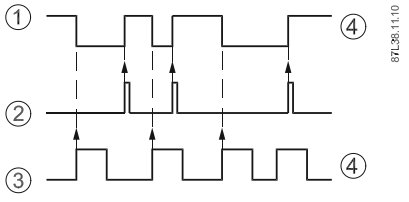

① Call up output
② Call up reset
③ Call up status
④ On - Off

When output B is configured as "call-up", the output is activated by an alarm condition and remains on until it is reset via meter display key or communication interface.

A new alarm will not activate a "call-up" function if the "call-up" function is still active from a previous alarm.

Note

Like alarm output, call-up output inverts to a pulse output providing a call-up if power disappears or cable connection is interrupted.

MAG 8000

When output B is configured as an "call-up" output, it will follow the internal alarms that were previously chosen in the Alarm Configuration List.

Note

Call-up output is inverted to a pulse output providing an alarm if power disappears or cable connection is interrupted.

Regional factory default settings

DN mm	size (inch)	Pulse width ms	Amount per pulse m^3 (Europe)	Amount per pulse Gallons (USA)	Amount per pulse ML (Australia)
25, 40, 50	(1", 1½", 2")	50	0.01	1	0.001
65, 80, 100, 125, 150	(2½", 3", 4", 5", 6")	50	0.1	10	0.001
200, 250, 300, 350, 400, 450, 500	(8", 10", 12", 14", 16", 18", 20")	50	1	100	0.01
600, 700, 800, 900, 1000, 1050, 1100, 1200	(24", 28", 30", 32", 36", 40", 42", 44", 48")	50	10	100	0.01

Pulse A is set to ON - Forward flow. Pulse B is set to Alarm.

Note

Via the MLFB order system is it possible to select other units than the default region units. The pulse output will only be enabled if the pulse settings are selected in the MLFB no.

Pulse output, volume selection (MAG 8000)

DN (inches)	Max. flow rate Qn (Q3)	Guidelines for min. volume per pulse at Qn Volume [m^3] = Qn [m^3/s] * (2*PW [s])						
(inches)	m^3	5 ms PW m^3 [100Hz]	10 ms PW m^3 [50Hz]	50 ms PW m^3 [10Hz]	50 ms PW gallon [10Hz]	50 ms PW ML [10Hz]	100 ms PW m^3 [5Hz]	500 ms PW m^3 [1Hz]
25 (1")	17.67	0.00005	0.0001	0.0005	0.130	0.000001	0.001	0.005
40 (1½")	45	0.0001	0.0003	0.001	0.330	0.000001	0.003	0.013
50 (2")	63	0.0002	0.0004	0.002	0.462	0.000002	0.004	0.018
65 (2½")	100	0.0003	0.0006	0.003	0.734	0.000003	0.006	0.028
80 (3")	160	0.0004	0.0009	0.004	1.174	0.000004	0.009	0.044
100 (4")	250	0.0007	0.0014	0.007	1.835	0.000007	0.014	0.069
125 (5")	400	0.0011	0.0022	0.011	2.935	0.000011	0.022	0.111
150 (6")	630	0.0018	0.0035	0.018	4.623	0.000018	0.035	0.175
200 (8")	1000	0.0028	0.0056	0.028	7.338	0.000028	0.056	0.278

DN (inches)	**Max. flow rate Qn (Q3)**	**Guidelines for min. volume per pulse at Qn Volume [m³] = Qn [m³/s] * (2*PW [s])**						
(inches)	**m³**	**5 ms PW m³ [100Hz]**	**10 ms PW m³ [50Hz]**	**50 ms PW m³ [10Hz]**	**50 ms PW gallon [10Hz]**	**50 ms PW ML [10Hz]**	**100 ms PW m³ [5Hz]**	**500 ms PW m³ [1Hz]**
250 (10")	1600	0.0044	0.0089	0.044	11.741	0.000044	0.089	0.444
300 (12")	2500	0.0069	0.0139	0.069	18.345	0.000069	0.139	0.694
350 (14")	3463	0.0096	0.0192	0.096	25.412	0.000096	0.192	0.962
400 (16")	4523	0.0126	0.0251	0.126	33.190	0.000126	0.251	1.256
450 (18")	5725	0.0159	0.0318	0.159	42.010	0.000159	0.318	1.590
500 (22")	7068	0.0196	0.0393	0.196	51.865	0.000196	0.393	1.963
600 (24")	10178	0.0283	0.0565	0.283	74.687	0.000283	0.565	2.827
700 (28")	13854	0.0385	0.0770	0.385	101.662	0.000385	0.770	3.848
750 (30")	15904	0.0442	0.0884	0.442	116.705	0.000442	0.884	4.418
800 (32")	18095	0.0503	0.1005	0.503	132.782	0.000503	1.005	5.026
900 (36")	22902	0.0636	0.1272	0.636	168.057	0.000636	1.272	6.362
1000 (40")	28274	0.0785	0.1571	0.785	207.477	0.000785	1.571	7.854
1050 (42")	31175	0.0866	0.1732	0.866	228.750	0.000866	1.732	8.659
1100 (44")	34211	0.0950	0.1901	0.950	251.043	0.000950	1.901	9.503
1200 (48")	40715	0.1131	0.2262	1.131	298.770	0.001131	2.262	11.310

PW = pulse width

Note

The calculated numbers of pulses are an average of the measuring period.

The factory value of pulse width shall be 10ms by if Z option L70-L74 for pulse A or L90-L94 for pulse B selected.

For MAG 8000 CT please see definition of Q3 flow rates in the certificates for OIML R 49 or MI 001.

Net flow output

The MAG 8000 has a special net pulse output that includes bi-directional flow calculations.

The example shows that over time, the net pulse output indicates the bi-directional totalizer as calculated internally. The same principle applies for forward and reverse flow calculation. By changing the status of the pulse output, the internal pulse calculator will be reset.

Flow	**Net totalizer in meter display (Bi-directional)**	**Pulse output forward Uni-directional mode Volume [m³]**		**Pulse output net forward Bi-directional mode Volume [m³]**	
	Volume [m³]	***Internal calculation***	***Delivered volume***	***Internal calculation***	***Delivered volume***
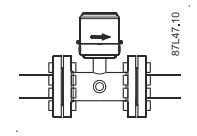	0	-	0	0	0
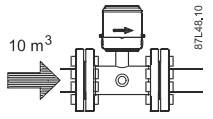	10	-	10	0	10
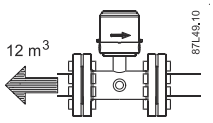	–2	-	0	-12	0
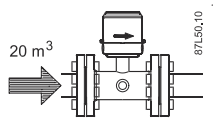	18	-	20	–12+20=	8
Total accounted volume [m³] Forward/Reverse	18F		30F		18F

Encoder output interface read out

			MSD LSD									
Digits in MAG 8000 display			**1**	**2**	**3**	**4**	**5**	**6**	**7**	**8**		
Model	**Size**	**Unit**	**Display configuration**								**Q_3**	**Digits after dec. point**
7ME 6820 2Y	DN50 (2")	m^3	0	0	0	0	0	0	0	0	63	1
7ME 6820 3F	DN65 (2½")	m^3	0	0	0	0	0	0	0	0	100	1
7ME 6820 3M	DN80 (3")	m^3	0	0	0	0	0	0	0	0	160	1
7ME 6820 3T	DN100 (4")	m^3	0	0	0	0	0	0	0	0	250	1
7ME 6820 4B	DN125 (5")	m^3	0	0	0	0	0	0	0	0	400	1
7ME 6820 4H	DN150 (6")	m^3	0	0	0	0	0	0	0	0	630	1
7ME 6820 4P	DN200 (8")	m^3	0	0	0	0	0	0	0	0	1000	1
7ME 6820 4V	DN250 (10")	m^3	0	0	0	0	0	0	0	0	1600	1
7ME 6820 5D	DN300 (12")	m^3	0	0	0	0	0	0	0	0	1600	1

Parameter 305 Decimal Point should be configured to "1 digit after decimal point" in case Encoder interface module is selected in MAG 8000 or MAG 8000 CT; otherwise proper reading from the device cannot be performed.

10.7 Meter uncertainty

To ensure continuous accurate measurement, water meters must be calibrated. The calibration is conducted at Siemens flow facilities with traceable instruments referring directly to the physical unit of measurement according to the International System of Units (SI).

Therefore, the calibration certificate ensures recognition of the test results worldwide, including the US (NIST traceability).

Siemens offers accredited calibrations assured to ISO 17025 in the flow range from 0.0001 m^3/h to 10 000 m^3/h.

Siemens Flow Instruments accredited laboratories are recognized by ILAC MRA (International Laboratory Accreditation Corporation- Mutual Recognition Arrangement) ensuring international traceability and recognition of the test results worldwide.

The selected calibration determines the accuracy of the water meter. An extended calibration of the MAG 8000 (7ME6810) sizes DN50 (2") to DN 300 (12") results in a max. ±0.2% of rate ±2 mm/s uncertainty. A calibration certificate is included with every sensor and calibration data is stored within the meter.

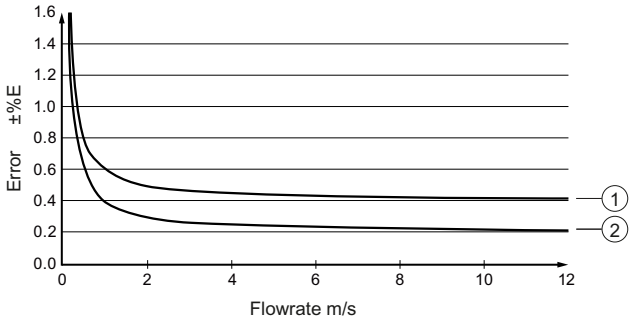

①	MAG 8000 Standard	Standard calibration	±0.4 % of rate ±2 mm/s
②	MAG 8000 Standard	Extended calibration	±0.2 % of rate ±2 mm/s

Calibration references conditions (ISO 9104 and DIN EN 29104)

Media temperature: 20°C ± 5K (68°F ± 9°F)

Ambient temperature: 20°C ± 5K (68°F ± 9°F)

Warming-up time: 30 min.

Incorporation in pipe section

Inlet section: 10 x DN

Outlet section: 5 x DN

Flow conditions: Fully developed flow profile

10.8 FM Fire Service applications (MAG 8000 and MAG 8000 CT)

Devices ordered with Z-option P20, P21 or P22 are FM Fire Service approved for automatic fire protection systems according to the Fire Service Meters Standard, Class Number 1044. The approval is applicable for the sizes DN 50, DN 80, DN 100, DN 150, DN 200, DN 250, and DN 300 (2", 3", 4", 6", 8", 10", and 12") with ANSI B16.5 Class 150 flanges.

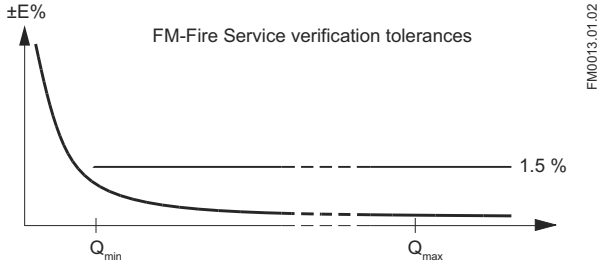

10.9 MAG 8000 CT (7ME6820) (Revenue program) water meter type approval

MAG 8000 CT program is type-approved according to international water meter standard OIML R49:2013. The Custody Transfer program is approved as Class I and Class II, for the sensor program from DN 50 to DN 600, at different Q3 and Q3/Q1.

Q2/Q1 = 1.6 and follows standard OIML R49 specification.

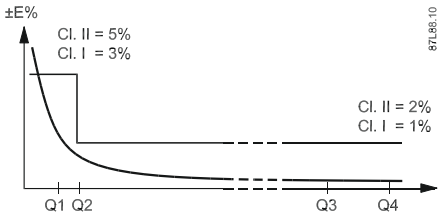

Cl. I / Cl. II = OIML R49 Class I / Class II

Table 10-1 OIML R49:2013 for Class 1 horizontal (not approved for bi-directional measurements)

Size	**50 (2")**	**65 (2½")**	**80 (3")**	**100 (4")**	**125 (5")**	**150 (6")**	**200 (8")**	**250 (10")**	**300 (12")**	**350 (14")**	**400 (16")**	**450 (18")**	**500 (20")**	**600 (24")**
"R" Q^3/Q1	200									125				
Q4 [m^3/h]	78.75	125	200	312.5	500	787.5	1250	2000	2000	3125	5000	5000	7875	7875
Q3 [m^3/h]	**63**	**100**	**160**	**250**	**400**	**630**	**1000**	**1600**	**1600**	**2500**	**4000**	**4000**	**6300**	**6300**
Q2 [m^3/h]	0.504	0.8	1.28	2	3.2	5.04	8	12.8	12.8	32	51.2	51.2	80.64	80.64
Q1 [m^3/h]	0.315	0.5	0.8	1.25	2	3.15	5	8	8	20	32	32	50.4	50.4

Table 10-2 OIML R49:2013 for Class 2 horizontal

Size	**50 (2")**	**65 (2½")**	**80 (3")**	**100 (4")**	**125 (5")**	**150 (6")**	**200 (8")**	**250 (10")**	**300 (12")**	**350 (14")**	**400 (16")**	**450 (18")**	**500 (20")**	**600 (24")**
"R" Q^3/Q1	**315**									**200**				
Q4 [m^3/h]	78.75	125	200	312.5	500	787.5	1250	2000	2000	3125	5000	5000	7875	7875
Q3 [m^3/h]	**63**	**100**	**160**	**250**	**400**	**630**	**1000**	**1600**	**1600**	**2500**	**4000**	**4000**	**6300**	**6300**
Q2 [m^3/h]	0.32	0.508	0.813	1.27	2.032	3.2	5.079	8.127	8.127	20	32	32	50.4	50.4
Q1 [m^3/h]	0.2	0.317	0.508	0.794	1.27	2	3.175	5.079	5.079	12.5	20	20	31.5	31.5

10.10 MAG 8000 CT (7ME6820) (Revenue program) MID option (MI-001)

MAG 8000 CT program is type approved according to international water meter standard OIML R49. Since 1 November 2006 the MI-001 water meter directive has been in force, which means that all water meters can be sold across the EU borders if the water meters contain a MI-001 label.

The MAG 8000 CT MI-001 verified and labeled products are equivalent to OIML R49 accuracy Class 2 according to Directive 2014/32/EU of the European Parliament and Council of

February 26, 2014 on measuring instruments (MID), Annex MI-001 in the sizes from DN 50 to DN 600.

The MID certification is obtained as a module B and module D approvals according to the above mentioned directive.

Module B : Type approval according to OIML R49

Module D : Quality insurance approval of production

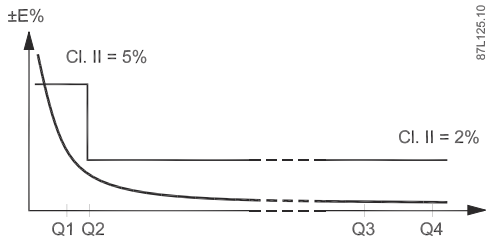

MAG 8000 CT MI-001 verified and labelled products at a given Q3 and Q4/Q3 = 1.25 and Q2/Q1 = 1.6 measuring ranges see below table:

Size	**50 (2")**	**65 (2½")**	**80 (3")**	**100 (4")**	**125 (5")**	**150 (6")**	**200 (8")**	**250 (10")**	**300 (12")**	**350 (14")**	**400 (16")**	**450 (18")**	**500 (20")**	**600 (24")**
"R" $Q^3/Q1$	40													
Q4 [m^3/h]	78.75	125	200	312.5	500	787.5	1250	2000	200	3125	5000	5000	7875	7875
Q3 [m^3/h]	**63**	**100**	**160**	**250**	**400**	**630**	**1000**	**1600**	**1600**	**2500**	**4000**	**4000**	**6300**	**6300**
Q2 [m^3/h]	2.52	4	6.4	10	16	25.2	40	64	64	100	160	160	252	252
Q1 [m^3/h]	1.58	2.50	4	6.25	10	15.75	25	40	40	62.5	100	100	157.5	157.5

Size	**50 (2")**	**65 (2½")**	**80 (3")**	**100 (4")**	**125 (5")**	**150 (6")**	**200 (8")**	**250 (10")**	**300 (12")**	**350 (14")**	**400 (16")**	**450 (18")**	**500 (20")**	**600 (24")**
"R" $Q^3/Q1$	63													
Q4 [m^3/h]	20	31.25	50	78.75	125	200	312.50	500	787.50	3125	5000	5000	7875	7875
Q3 [m^3/h]	**63**	**100**	**160**	**250**	**400**	**630**	**1000**	**1600**	**1600**	**2500**	**4000**	**4000**	**6300**	**6300**
Q2 [m^3/h]	1.60	2.54	4.06	6.35	10.16	16	25.40	40.63	40.63	63.49	101.59	101.59	160	160
Q1 [m^3/h]	1	1.59	2.54	3.97	6.35	10	15.87	25.40	25.40	39.68	63.49	63.49	100	100

Size	**50 (2")**	**65 (2½")**	**80 (3")**	**100 (4")**	**125 (5")**	**150 (6")**	**200 (8")**	**250 (10")**	**300 (12")**	**350 (14")**	**400 (16")**	**450 (18")**	**500 (20")**	**600 (24")**
"R" $Q^3/Q1$	80													
Q4 [m^3/h]	31.25	50	78.75	125	200	312.5	500	787.5	1250	3125	5000.00	5000	7875	7875
Q3 [m^3/h]	**63**	**100**	**160**	**250**	**400**	**630**	**1000**	**1600**	**1600**	**2500**	**4000**	**4000**	**6300**	**6300**
Q2 [m^3/h]	1.26	2	3.2	5	8	12.6	20	32	32	50	80	80	126	126
Q1 [m^3/h]	0.79	1.25	2	3.13	5	7.88	12.5	20	20	31.25	50	50	78.75	78.75

Size	**50 (2")**	**65 (2½")**	**80 (3")**	**100 (4")**	**125 (5")**	**150 (6")**	**200 (8")**	**250 (10")**	**300 (12")**	**350 (14")**	**400 (16")**	**450 (18")**	**500 (20")**	**600 (24")**
"R" $Q^3/Q1$	100													
Q4 [m^3/h]	31.25	50	78.75	125	200	312.5	500	787.5	1250	3125	5000	5000	7875	7875
Q3 [m^3/h]	**63**	**100**	**160**	**250**	**400**	**630**	**1000**	**1600**	**1600**	**2500**	**4000**	**4000**	**6300**	**6300**
Q2 [m^3/h]	1.01	1.6	2.56	4	6.4	10.08	16	25.6	25.6	40	64	64	100.8	100.8
Q1 [m^3/h]	0.63	1	1.6	2.50	4	6.30	10	16	16	25	40	40	63	63

Size	**50 (2")**	**65 (2½")**	**80 (3")**	**100 (4")**	**125 (5")**	**150 (6")**	**200 (8")**	**250 (10")**	**300 (12")**	**350 (14")**	**400 (16")**	**450 (18")**	**500 (20")**	**600 (24")**
"R" $Q^3/Q1$	160													
Q4 [m^3/h]	78.75	125	200	312.5	500	787.5	1250	2000	2000	3125	5000	5000	7875	7875
Q3 [m^3/h]	**63**	**100**	**160**	**250**	**400**	**630**	**1000**	**1600**	**1600**	**2500**	**4000**	**4000**	**6300**	**6300**
Q2 [m^3/h]	0.63	1	1.6	2.5	4	6.3	10	16	16	25	40	40	63	63
Q1 [m^3/h]	0.39	0.63	1	1.56	2.50	3.94	6.25	10	10	15.63	25	25	39.38	39.38

Size	**50 (2")**	**65 (2½")**	**80 (3")**	**100 (4")**	**125 (5")**	**150 (6")**	**200 (8")**	**250 (10")**	**300 (12")**	**350 (14")**	**400 (16")**	**450 (18")**	**500 (20")**	**600 (24")**
"R" $Q^3/Q1$	200													
Q4 [m^3/h]	78.75	125	200	312.5	500	787.5	1250	2000	2000	-	-	-	-	-
Q3 [m^3/h]	**63**	**100**	**160**	**250**	**400**	**630**	**1000**	**1600**	**1600**	**-**	**-**	-	-	-
Q2 [m^3/h]	0.5	0.8	1.28	2	3.2	5.04	8	12.8	12.8	-	-	-	-	-
Q1 [m^3/h]	0.32	0.5	0.8	1.25	2	3.15	5	8	8	-	-	-	-	-

Size	**50 (2")**	**65 (2½")**	**80 (3")**	**100 (4")**	**125 (5")**	**150 (6")**	**200 (8")**	**250 (10")**	**300 (12")**	**350 (14")**	**400 (16")**	**450 (18")**	**500 (20")**	**600 (24")**
"R" $Q^3/Q1$	250													
Q4 [m^3/h]	78.75	125	200	312.5	500	787.5	1250	2000	2000	-	-	-	-	-
Q3 [m^3/h]	**63**	**100**	**160**	**250**	**400**	**630**	**1000**	**1600**	**1600**	**-**	**-**	-	-	-
Q2 [m^3/h]	0.4	0.64	1.02	1.6	2.56	4.03	6.4	10.24	10.24	-	-	-	-	-
Q1 [m^3/h]	0.25	0.4	0.64	1	1.6	2.52	4	6.4	6.4	-	-	-	-	-

Operating Conditions

Environment class	E2, M1
Climatic class	-25...55 °C, condensing, closed
Verification tolerance	±5 % $Q_1 < Q < Q_2$ ±2 % $Q_2 \leq Q \leq Q_4$
Unit of measurement	Cubic meters
Temperature	T30 (0.1 °C - 30 °C) / tested up to T50 according to OIML R49:2013
Pressure	PN ≔ 16 bar or PN ≔ 10 bar or PN ≔ 6 bar

Power supply	3.6 V Lithium Battery, 12 - 24 VAC/VDC, 115 - 230 VAC
Compact/Remote	Max. 30 m cable

10.11 The effect of temperature MAG 8000 (7ME6810) and MAG 8000 CT (7ME6820)

Metric (Pressures in bar)					
Flange spec.	**Flange rating**	**Temperature °C**			
		0	**10**	**50**	**70**
Sizes 25 mm, 40 mm and > 300 mm					
EN 1092-1	PN 10	10.0	10.0	9.7	9.4
	PN 16	16.0	16.0	15.5	15.1
	PN 40	40.0	40.0	38.7	37.7
ANSI 16.5	150 lb	19.7	19.7	19.3	18.0
Sizes 50 mm to 300 mm					
EN 1092-1	PN 10	10.0	10.0	10.0	8.2
	PN 16	10.0	16.0	16.0	13.2
ANSI 16.5	150 lb	10.0	19.7	19.7	16.2

Imperial (Pressures in Psi)					
Flange spec.	**Flange rating**	**Temperature °F**			
		32	**50**	**122**	**158**
Sizes 1", 1½", and > 12"					
EN 1092-1	PN 10	145	145	141	136
	PN 16	232	232	225	219
	PN 40	580	580	561	547
ANSI 16.5	150 lb	286	286	280	261
Sizes 2" to12"					
EN 1092-1	PN 10	145	145	145	119
	PN 16	145	232	232	191
ANSI 16.5	150 lb	145	286	286	235

Dimension drawings

11

Meter dimensions

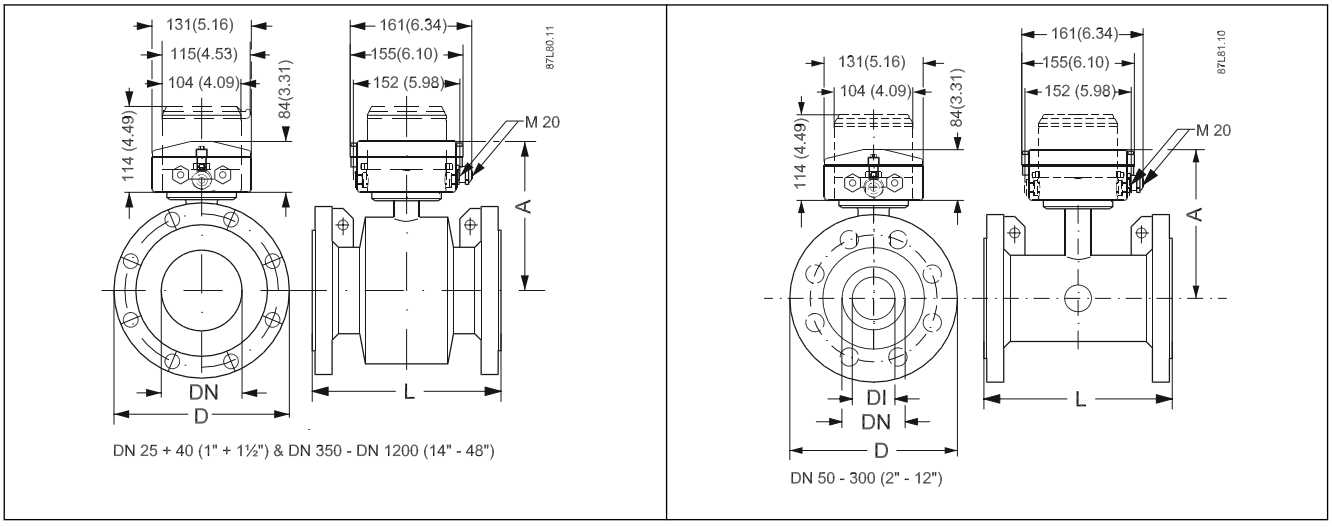

Dimensions for MAG 8000 Standard (7ME6810) and MAG 8000 CT (7ME6820).

Nominal size DN	A	L, length								D, diameter		Weight 1)	
		EN 1092-1			ANSI 16.5 Cl.150	AS 4087 PN 16	AS 2129 Table E	AWWA		DI	D	AS 4087 PN 16	
		PN 10	PN 16	PN 40									
mm (inch)	mm (inch)	mm	mm	mm	inch	mm	mm	mm	inch	mm (inch)		kg	lbs
25 (1")	194 (7.7")	-	-	200	7.9"	200	200	N/A	N/A	25 (0.98")	2)	6	13
40 (1½")	204 (8.1")	-	-	200	7.9"	200	200	N/A	N/A	40 (1.57")	2)	9	20
50 (2")	195 (7.7")	-	200	-	7.9"	200	-	N/A	N/A	42 (1.65")	2)	11	25
65 (2½")	201 (8")	-	200	-	7.9"	200	-	N/A	N/A	55 (2.17")	2)	13	29
80 (3")	207 (8.2")	-	200	-	7.9"	200	-	N/A	N/A	67 (2.64")	2)	15	34
100 (4")	214 (8.5")	-	250	-	9.8"	250	-	N/A	N/A	81 (3.19")	2)	17	38
125 (5")	224 (8.9")	-	250	-	9.8"	250	250	N/A	N/A	101 (3.98")	2)	22	50
150 (6")	239 (9.5")	-	300	-	11.8"	300	-	N/A	N/A	131 (5.16")	2)	28	63
200 (8")	264 (10.5")	350	350	-	13.8"	350	-	N/A	N/A	169 (6.65")	2)	50	113
250 (10")	291 (11.5")	450	450	-	17.7"	450	-	N/A	N/A	212 (8.35")	2)	71	160

Nominal size DN	**A**	**L, length**								**D, diameter**		**Weight 1)**	
		EN 1092-1			**ANSI 16.5 Cl.150**	**AS 4087 PN 16**	**AS 2129 Table E**	**AWWA**		**DI**	**D**	**AS 4087 PN 16**	
		PN 10	**PN 16**	**PN 40**									
mm (inch)	**mm (inch)**	**mm**	**mm**	**mm**	**inch**	**mm**	**mm**	**mm**	**inch**	**mm (inch)**		**kg**	**lbs**
300 (12")	317 (12.6")	500	500	-	19.7"	500	-	N/A	N/A	265 (10.43")	2)	88	198
350 (14")	369 (14.6")	550	550	-	21.7"	550	-	N/A	N/A	350 (13.78")	2)	127	279
400 (16")	394 (15.6")	600	600	-	23.6"	600	-	N/A	N/A	400 (15.75")	2)	145	318
450 (18")	425 (16.8")	600	600	-	23.6"	600	-	N/A	N/A	450 (17.72")	2)	175	394
500 (20")	450 (17.8")	600	600	-	23.6"	600	-	N/A	N/A	500 (19.68")	2)	225	494
600 (24")	501 (19.8")	600	600	-	23.6"	600	-	N/A	N/A	600 (23.62")	2)	340	747
700 (28")	544 (21.4")	700	875	-	N/A	700	-	700	27.6"	700 (27.55")	2)	316	694
750 (30")	571 (22.5")	N/A	N/A	-	N/A	N/A	-	750	29.5"	750 (29.52")	2)	N/A	N/A
800 (32")	606 (23.9")	800	1000	-	N/A	800	-	800	31.5"	800 (31.49")	2)	398	1045
900 (36")	653 (25.7")	900	1125	-	N/A	900	-	900	35.4"	900 (35.42")	2)	476	1045
1000 (40")	704 (27.7")	1000	1250	-	N/A	1000	-	1000	39.4"	1000 (39.36")	2)	602	1322
1050 (42")	704 (27.7")	N/A	N/A	-	N/A	N/A	-	1050	41.3"	1050 (41.33")	2)	N/A	N/A
1100 (44")	755 (29.7")	N/A	N/A	-	N/A	N/A	-	1100	43.3"	1100 (43.30")	2)	N/A	N/A
1200 (48")	810 (31.9")	1200	1500	-	N/A	1200	-	1200	47.2"	1200 (47.23")	2)	887	1996

1) For remote version the sensor weight is reduced with 2 kg (4.5 lb)

2) See flange table (Page 111)

Remote version

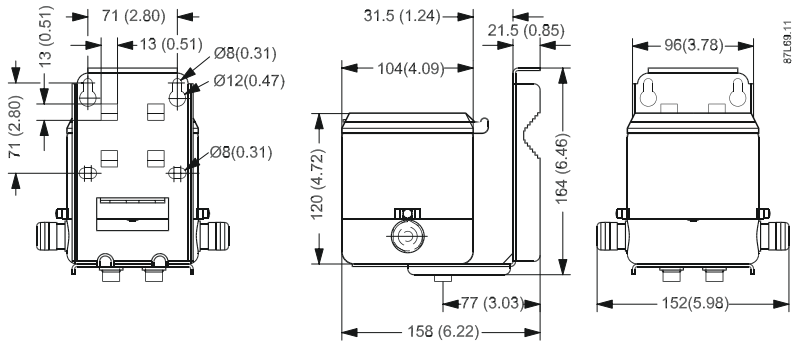

Figure 11-1 Dimensions in mm (inch), weight 3.5 kg (8 lbs)

Flange dimensions

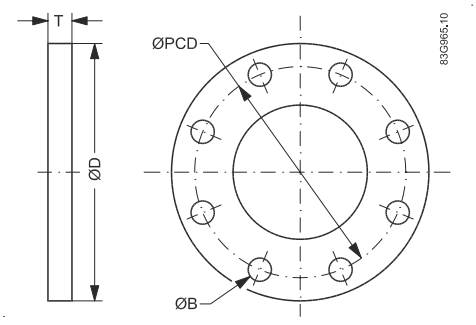

MAG 8000 (7ME8610) and MAG 8000 CT (7ME6820)

Dimensions mm					Bolting	
Size	**D**	**PCD**	**T**	**B**	**Holes**	**Bolts**
PN 10						
200	340	295	24	22	8	M20
250	395	350	26	22	12	M20
300	445	400	26	22	12	M20
350	505	460	28	22	16	M20
400	565	515	32	26	16	M24
450	615	565	36	26	20	M24
500	670	620	38	26	20	M24
600	780	725	42	30	20	M27
700	895	840	-	30	24	M27
750	-	-	-	-	-	-
800	1015	950	-	33	24	M30
900	1115	1050	-	33	28	M30
1000	1230	1160	-	36	28	M33
1050	-	-	-	-	-	-

Dimensions mm					Bolting	
Size	**D**	**PCD**	**T**	**B**	**Holes**	**Bolts**
1100	-	-	-	-	-	-
1200	1455	1380	-	-39	32	M36
PN 16						
50	165	125	19	18	4	M16
65	185	145	20	18	8	M16
80	200	160	20	18	8	M16
100	220	180	22	18	8	M16
125	250	210	22	18	8	M16
150	285	240	24	22	8	M20
200	340	295	26	22	12	M20
250	405	355	29	26	12	M24
300	460	410	32	26	12	M24
350	520	470	35	26	16	M24
400	580	525	38	30	16	M27
450	640	585	42	30	20	M27
500	715	650	46	33	20	M30
600	840	770	52	36	20	M33
750						
800	1015	950	-	33	24	M30
900	1125	1050	-	39	28	M36
1000	1255	1170	-	42	28	M39
1050	-	-	-	-	-	-
1100	-	-	-	-	-	-
1200	1485	1390	-	48	32	M45
PN 40						
25	115	85	16	14	4	M12
40	150	110	18	18	4	M16

MAG 8000 (7ME8610) and MAG 8000 CT (7ME6820)

Dimensions Inches					Bolting	
Size	**D**	**PCD**	**T**	**B**	**Holes**	**Bolts**
ANSI Class 150						
1"	4.25	3.12	0.56	0.62	4	9/16"
1 ½"	5	3.88	0.68	0.62	4	9/16"
2"	6	4.75	0.75	0.75	4	5/8"
2 ½"	7	5.5	0.88	0.75	4	5/8"
3"	7.5	6	0.94	0.75	4	5/8"
4"	9	7.5	0.94	0.75	8	5/8"
5"	10	8.5	0.94	0.88	8	3/4"
6"	11	9.5	1	0.88	8	3/4"
8"	13.5	11.75	1.12	0.88	8	3/4"

Dimensions Inches					Bolting	
Size	**D**	**PCD**	**T**	**B**	**Holes**	**Bolts**
10"	16	14.25	1.19	1.00	12	7/8"
12"	19	17	1.25	1.00	12	7/8"
14"	21	18.75	1.38	1.12	12	1"
16"	23.5	21.25	1.44	1.12	16	1"
18"	25	22.75	1.56	1.25	16	1 1/8"
20"	27.5	25	1.69	1.25	20	1 1/8"
24"	32	29.5	1.88	1.38	20	1 1/4"

External battery pack and cable



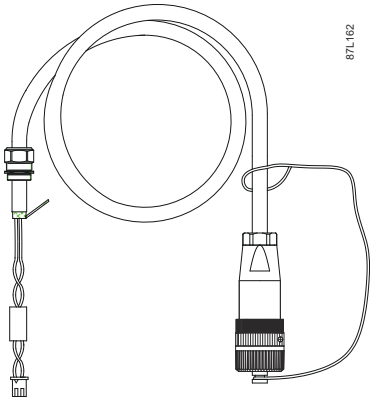

Note

Physical orientation of battery pack may influence battery capacity.

Optimal battery capacity is achieved with battery pack in an upright position as shown.

The cable for the battery pack connection must be ordered separately.

For information about battery disposal, see Battery disposal (Page 86).

Grounding rings

Sizes DN 25 to 300 (7ME6810 and 7ME6820)

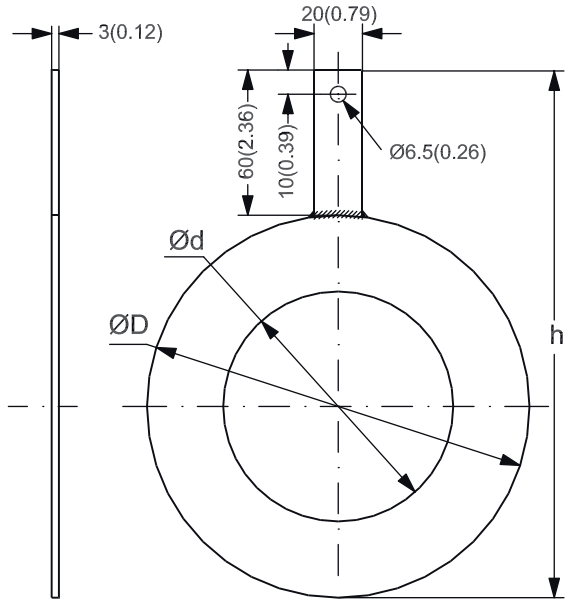

Figure 11-2 Flat ring

Table 11-1 Flat ring dimensions

Dimension	Internal diameter (d)	Outside diameter (D)	h
DN 25	27	68	143
DN 40	38	86	163
DN 50	52	100	175
DN 65	64	120	195
DN 80	79	133	208
DN 100	95	158	233
DN 125	115	188	263
DN 150	145	216	291
DN 200	193	268	343
DN 250	246	324	399
DN 300	295	374	449

Sizes DN 350 to 600 (7ME6810 and 7ME6820) and DN 700 to 1200 (7ME6810)

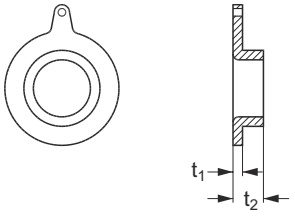

Figure 11-3 Type C grounding ring

Product documentation and support

A

A.1 Product documentation

Process instrumentation product documentation is available in the following formats:

- Certificates (http://www.siemens.com/processinstrumentation/certificates)
- Downloads (firmware, EDDs, software) (http://www.siemens.com/processinstrumentation/downloads)
- Catalog and catalog sheets (http://www.siemens.com/processinstrumentation/catalogs)
- Manuals (http://www.siemens.com/processinstrumentation/documentation)
  You have the option to show, open, save, or configure the manual.
  - "Display": Open the manual in HTML5 format
  - "Configure": Register and configure the documentation specific to your plant
  - "Download": Open or save the manual in PDF format
  - "Download as html5, only PC": Open or save the manual in the HTML5 view on your PC

You can also find manuals with the Mobile app at Industry Online Support (https://support.industry.siemens.com/cs/ww/en/sc/2067). Download the app to your mobile device and scan the device ID link.

Product documentation by serial number

Using the PIA Life Cycle Portal, you can access the serial number-specific product information including technical specifications, spare parts, calibration data, or factory certificates.

Entering a serial number

1. Open the PIA Life Cycle Portal (https://www.pia-portal.automation.siemens.com).
2. Select the desired language.
3. Enter the serial number of your device. The product documentation relevant for your device is displayed and can be downloaded.

To display factory certificates, if available, log in to the PIA Life Cycle Portal using your login or register.

Scanning an ID link

1. Scan the ID link on your device with a mobile device.
2. Click "PIA Portal".

To display factory certificates, if available, log in to the PIA Life Cycle Portal using your login or register.

A.2 Technical support

Technical support

If this documentation does not completely answer your technical questions, you can enter a Support Request (http://www.siemens.com/automation/support-request).

For help creating a support request, view this video here.

Additional information on our technical support can be found at Technical Support (http://www.siemens.com/automation/csi/service).

Service & support on the Internet

In addition to our technical support, Siemens offers comprehensive online services at service & support (http://www.siemens.com/automation/service&support).

Contact

If you have further questions about the device, contact your local Siemens representative, by doing the following:

1. Visit Contact at Siemens (http://www.automation.siemens.com/partner).
2. Select "All Products and Branches" > "Products & Services" > "Industrial automation".
3. Choose either "Process analytics" or "Process instrumentation", depending on your product.
4. Select the product category ("Pressure measurement", for example), then select your product.
5. Click "Search".
   The contacts for your product in all regions display.

Contact address for business unit:
Siemens AG
Digital Industries
Process Automation
Östliche Rheinbrückenstr. 50
76187 Karlsruhe, Germany

Spare parts/Accessories

B

B.1 Ordering of spare parts

Condition

- You have a Siemens Industry Mall account.

Procedure

1. Open the PIA Life Cycle Portal (https://www.pia-portal.automation.siemens.com).
2. Select the desired language.
3. To find spare parts for your device, do one of the following:
   - Enter the complete order number of your device (e.g. 7ME4633-4KA51-8DC3-Z A05+B11+E06+F11) into the "Product number" field and click "Go".
   - Enter the serial number of your device (e.g. N1KXXXXXXX) in the "Serial number" field and click "Go".
   - If you do not know the product or serial number, search for your device under "Product family".
4. Navigate to the "Spare parts" tab.
   You see the list of spare parts available for your device.



5. Select a spare part and add it to your watch list.
   The watch list opens.
6. Click "Add to cart of Industry Mall".



The Siemens Industry Mall opens and you can order your spare part.

Flow Tool

C

C.1 Flow Tool

Condition

In order to commission the water meter, it is necessary to install the Flow Tool program/software on your computer and connect the IrDA communication adaptor in the built-in IrDA communication interface on transmitter. The Flow Tool software is compatible with Windows 2000, Windows XP, and Windows 7 32/64 bit.

Read Flow Tool FAQ and Release Note installed with the Flow Tool software.

Go to Siemens Industry Online Support (https://support.industry.siemens.com/cs/products?dtp=Download&mfn=ps&pnid=17328&lc=en-US) to download the latest version of the Flow Tool.

Device driver

The Device Drivers are related to meter version and is automatically selected in "Automatic" mode. In "Manual" mode, meter version is manually selected and version check is automatically made when data is uploaded or downloaded.

Data backup

Meter information is stored in an internal data prom that secures data in case of power failure.

Information like totalizer 1 and 2, date and time, and the statistic data in Advanced version is stored every 10 minutes. Every 4 hours battery consumption is calculated and remaining battery capacity is updated together with "operation time since first power up" and "battery operation time".

C.2 Initial commissioning via Flow Tool

This chapter describes how to start up commissioning via Flow Tool software.

Connecting PC to meter

Connect IrDa communication adaptor to its interface on transmitter and connect PC to adaptor.

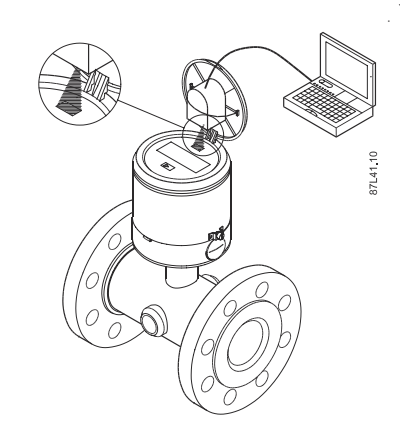

Figure C-1 MAG 8000 or MAG 8000 CT has a built-in IrDA communication interface on top of meter. IrDA adaptor can be fixed to lid by rubber band.

Starting Flow Tool software program

Double-click on Flow Tool icon on windows desktop to start program.

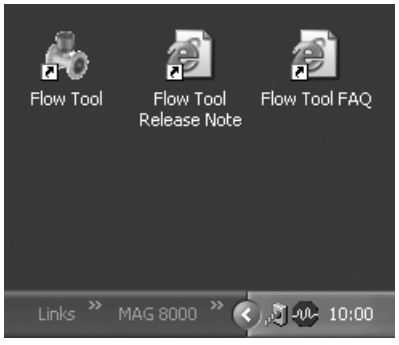

Note

For on-line communication make sure the IrDA symbol is visible in the toolbar status menu before starting Flow Tool.

C.3 Configuring the device

This chapter describes how to set up meter for communication with PC. The options in both Flow Tool and SIMATIC PDM software are the same; only the views on the PC screen differ.

Setting up meter

1. Right-click on "Project".
2. Select "New".
3. Select "Flow Meter".

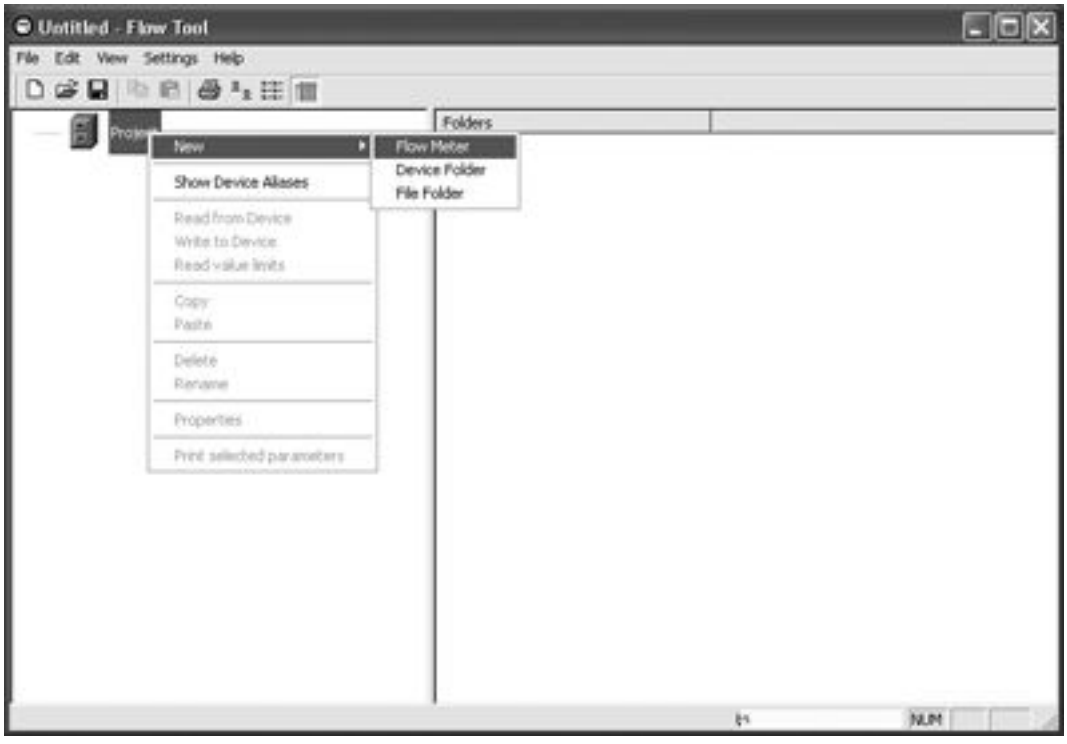

4. Name device.
5. Select configuration type ("Automatic" or "Manual").

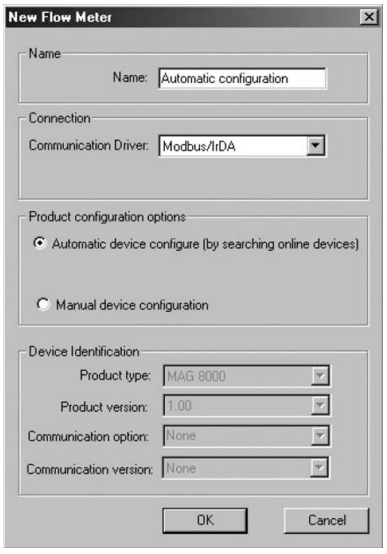

"Automatic" configuration is selected if PC is connected directly to meter.

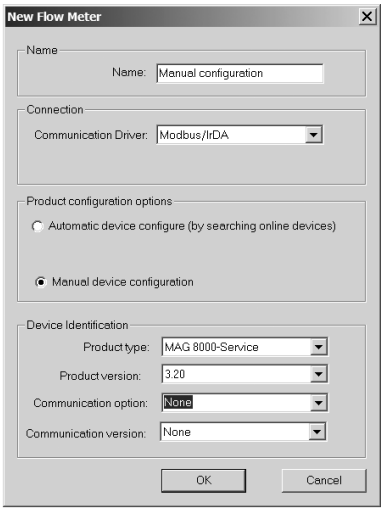

"Manual" configuration is selected if configuration is made without any connection to a meter.
Configuration is downloaded to the meter afterwards.

C.4 Setting the basic parameters

Note

No factory reset

The device is delivered with factory settings that are not stored as default values. Because no default values are present in the meter, an automatic return to factory values is not possible.

Setting parameters

The meter information is PIN-protected. The default factory PIN is "1000" and can be changed after gaining access to the meter. The PIN can be reset using a hardware key, see Data protection (Page 59).

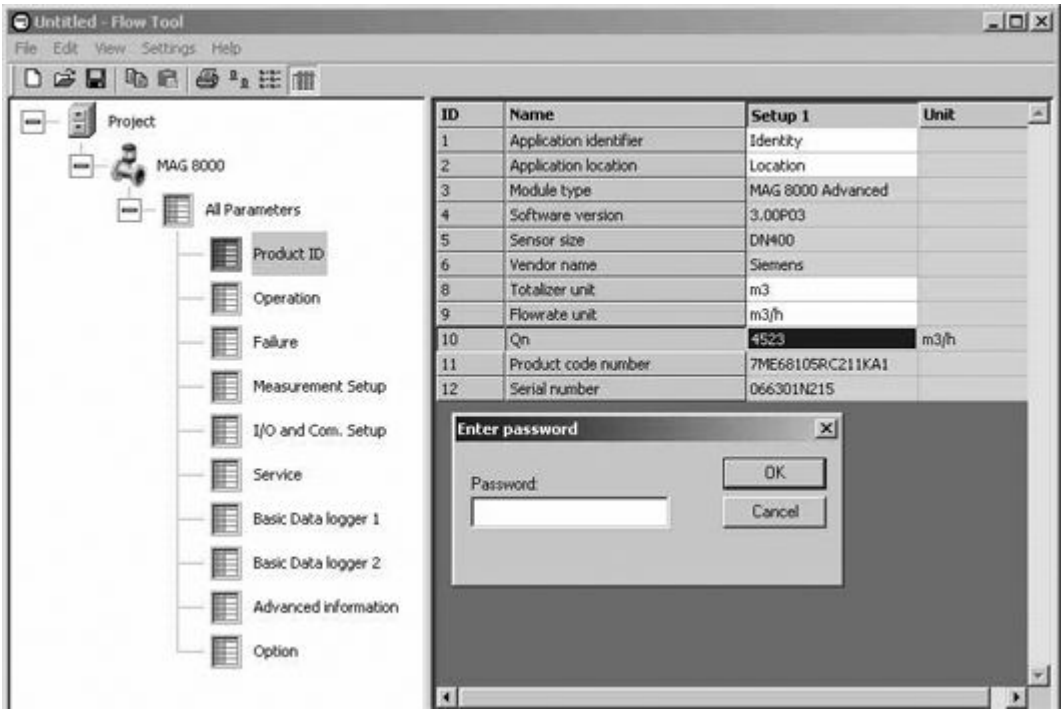

Read, write, print or export meter data

A single parameter or a parameter group to be read, written, printed or exported to a CSV file.

Only parameters (data) shown on white background can be changed. Red texts are off-line data which are not stored in the MAG 8000 yet, whereas black texts show the actual meter data.

Each parameter has a description (prompt) advising how the parameter can be programmed and which settings are programmable.

The figure below shows alarm status with the marked alarms enabled.

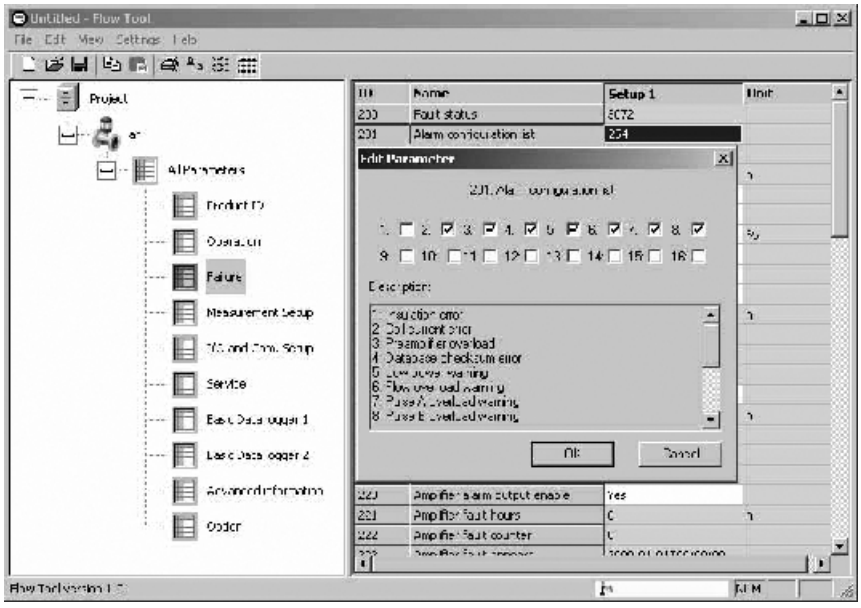

Figure C-2 Alarm status - marked alarms are enabled

Customer-selected parameter list

The default parameter list is divided into various functional groups with maximum 99 parameters included. For a complete parameter overview, see "Parameter lists" in the appendix.

Customized parameter list can be configured by creating a new parameter folder.

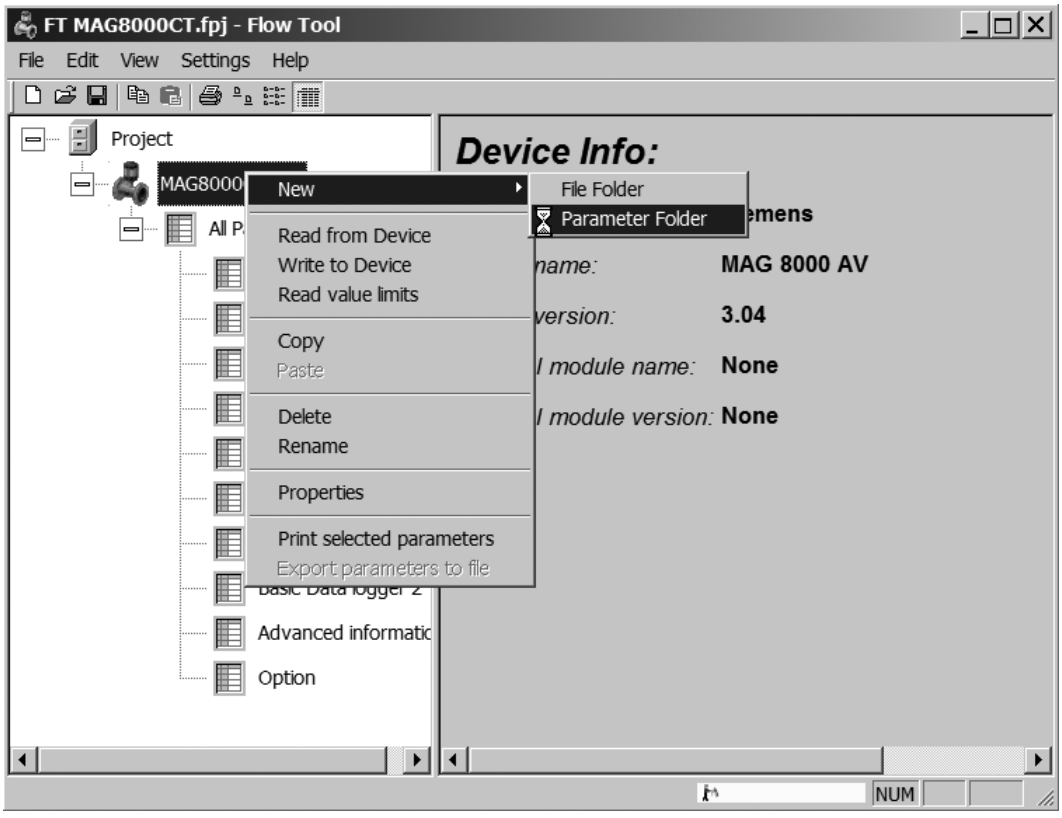

Figure C-3 Creating new parameter folder

Copy any existing parameter to the new folder. These parameters are updated and handled as the original parameters and listed in the same order as copied to the customized parameter list.

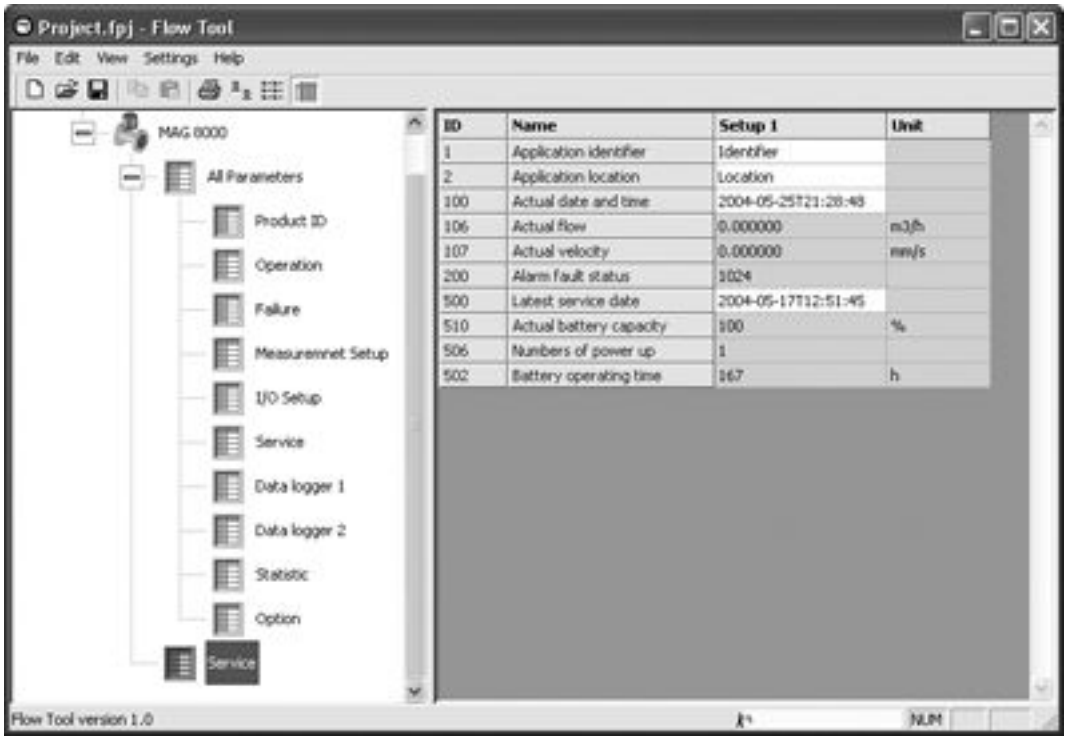

Figure C-4 Customer-specified parameter list

There is no limitation on the number of customer-specified parameter lists.

Saving the project will make the parameter list configuration available for future use.

Note

Saving the file with only the customized parameter list expanded will make future monitoring and changes of parameters easier.

See also

www.siemens.com/flow (www.siemens.com/flow)

C.5 Unit selection

MAG 8000 and MAG 8000 CT are delivered with totalizer and flow rate units as ordered via the MLFB structure.

The standard MAG 8000 units for each region are:

- **Europe**: m^3 for totalizer and m^3/h for flow rate
- **US**: Gallon for totalizer and GPM (Gallon per minute) for flow rate
- **Australia**: ML for totalizer and ML/d (Mega liter/day) for flow rate

The following MAG 8000 units and combinations are available:

Volume: m^3, m^3 × 100, L × 100, Gallon, G × 100, G × 1000, MG, CF × 100, CF × 1000, AF, AI, kl, ML, BBL42

Flow rate: m^3/min, m^3/h, m^3/d, L/s, L/min, L/h, ML/d, GPS, GPM, GPH, GPD, MGD, CFS, CFM, CFH, BBL42/s, BBL42/min, BBL42/h, BBL42/d

The MAG 8000 CT format for all regions is:

- m^3 for totalizer and m^3/h for flow rate

To ensure selection of correct conversion factor, see unit conversion table in appendix.

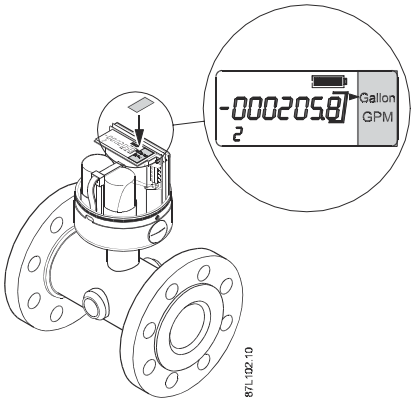

All measurement units are printed on a label affixed to the display (except the European version). Some meter sizes have a factor included to secure the 8 digit display value will not overrun after short time of operation. Manual configuration of new units is allowed. A new sticker showing the new settings must then be affixed to the display.

Protected parameters

The following parameters are protected by HW key (for a complete overview of paramters go to Parameter lists (Page 147)):

MAG 8000 Standard / MAG 8000 CT		**MAG 8000 CT (additionally)**	
Parameter no.	**Parameter name**	**Parameter no.**	**Parameter name**
5	Sensor tube diameter	100	Actual date and time
8	Totalizer unit	101	Totalizer 1
9	Flow unit	102	Totalizer 2
10	Qn (Q3)	103	Net totalizer (since FW 3.11)
11	Poduct code number	201	Alarm configuration list
12	Meter serial number	206	Battery alarm limit
300	Totalizer unit factor	303	Operation excitation frequency
301	Flow unit factor	305	Decimal point place
302	Pipe size	307	Measurement direction
306	Dsplayed unit	310	Flow direction totalizer 1
321	Calibration date	312	Flow direction totalizer 2
323	Calibration factor	327	Adjustment factor
325	Sensor offset	328	Low flow cut-off

MAG 8000 Standard / MAG 8000 CT		MAG 8000 CT (additionally)	
Parameter no.	**Parameter name**	**Parameter no.**	**Parameter name**
332	Max. sensor frequency excitation	329	Filter time constant
506	Numbers of power up	333	Empty pipe detection
520	Calibration temperature	334	Empty pipe impedance
522	Temperature calibration start	420	Device Communication Address
840	Tariff control mode	511	Communication module type
842	Tariff 1 period time end	550	Coil current active
844	Tariff 1 upper limit range	551	Fix flow mode active
845	Tariff 2 period time end	552	Fixed flow value
847	Tariff 2 upper limit range	805	Insulation upper limit
848	Tariff 3 period time end		
850	Tariff 3 upper limit range		
851	Tariff 4 period time end		
853	Tariff 4 upper limit range		
854	Tariff 5 period time end		
856	Tariff 5 upper limit range		
857	Reset tariff values		

Hardware key

To gain access to protected parameters a hardware key must be installed. The hardware key hole is located in front part of PCB behind battery, see connection diagram (Page 35).

Note

Hardware key on MAG 8000 CT

For MAG 8000 CT only authorized persons, with the acceptance and under direction of the local authorities are allowed to use the hardware key.

Changing units

Note

Not allowed on MAG 8000 CT

This function is not allowed on MAG 8000 CT.

1. Select service mode and meter version – upload data from meter.
2. Open transmitter.
3. Remove battery (keep connected).

4. Attach hardware key to PCB board (for correct attachment, see upper part of figure).

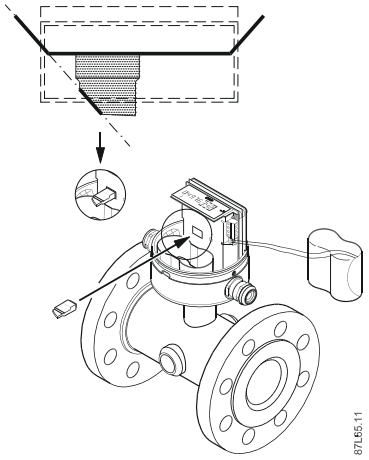

5. Change units description in parameters 8 and 9, see Unit conversion table.
6. Change units factor in parameters 300 and 301, see Unit conversion table.
7. Change maximum flow rate Qn (Q3) to new unit selection in parameter 10.
8. Select display unit in parameter 306.
9. Download each parameter to meter.
10. Remove hardware key.
11. Re-assemble meter.

Note

Important

The service mode opens many parameters. If these parameters are changed, it can seriously affect meter accuracy and operation. Be careful when writing new parameter values as meter has **no default settings** to return to.

C.6 Output configuration

Pulse output can be configured as volume pulse, alarm or call-up. Default factory setting is with output A enabled for forward flow and output B for alarm output.

Output configuration in Flow Tool

Select "I/O and Com.Setup". The software window shows the parameters for output configuration. Each parameter has its own guideline for selecting the correct parameter setting.

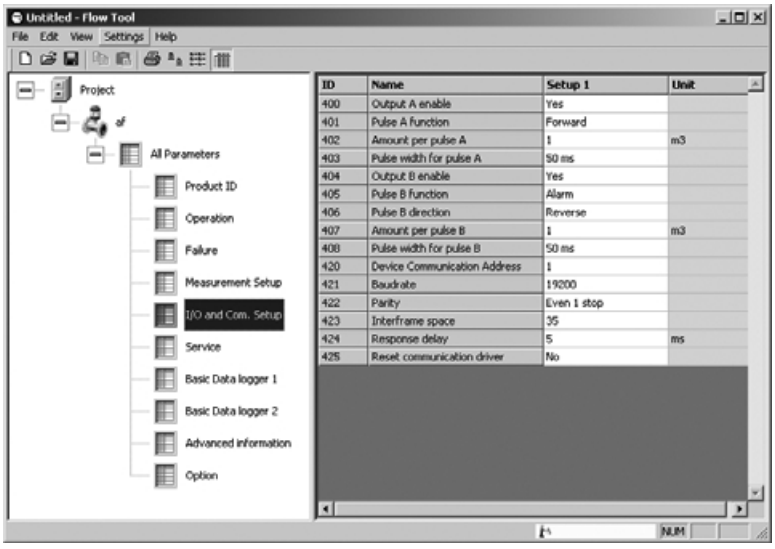

To see how the outputs work, please see "Output characteristics" (Page 99).

C.7 Default display information and accessible display menus

Parameter 131 defines default display information with selection between

- Totalizer 1 (Index 1)
- Totalizer 2 (Index 2)
- Flow rate (Index 3, updated with selected measuring frequency)
- Fault codes (Index 4)
- Customer totalizer (Index 5 - resettable)

Default information is shown after power-up as well as after no key operation for 10 minutes.

Parameter 130 defines accessible display menus with selection of one or more of the following menus:

- Operator menu
- Meter info menu
- Service menu
- Data logger menu
- Statistic menu (advanced version only)
- Tariff menu (advanced version only)

Disabling display of menu data will not affect operation of functions.

C.8 Internal data handling

Meter status

Meter status parameter (120) gives a fast indication of reliability of revenue data.

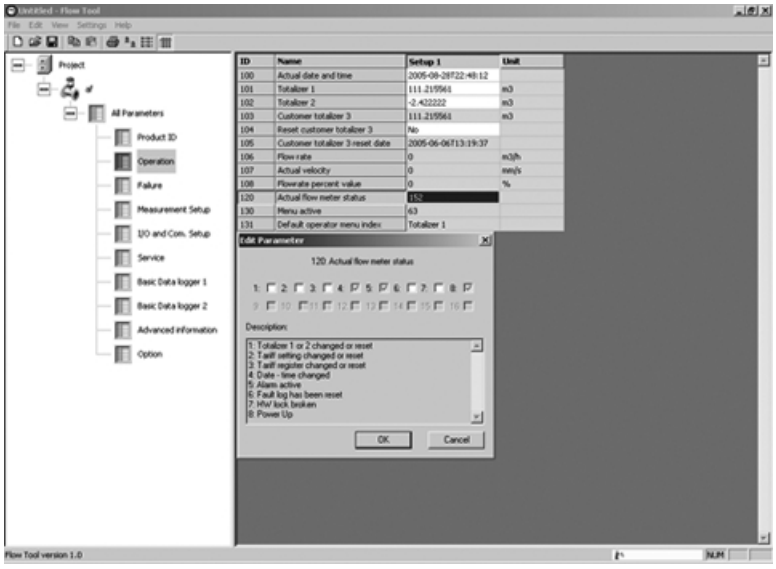

It shows whether important information has been reset or manipulated, for instance if meter has been powered down.

Status information can only be reset while hardware key is mounted.

Data logger / Consumption alarm

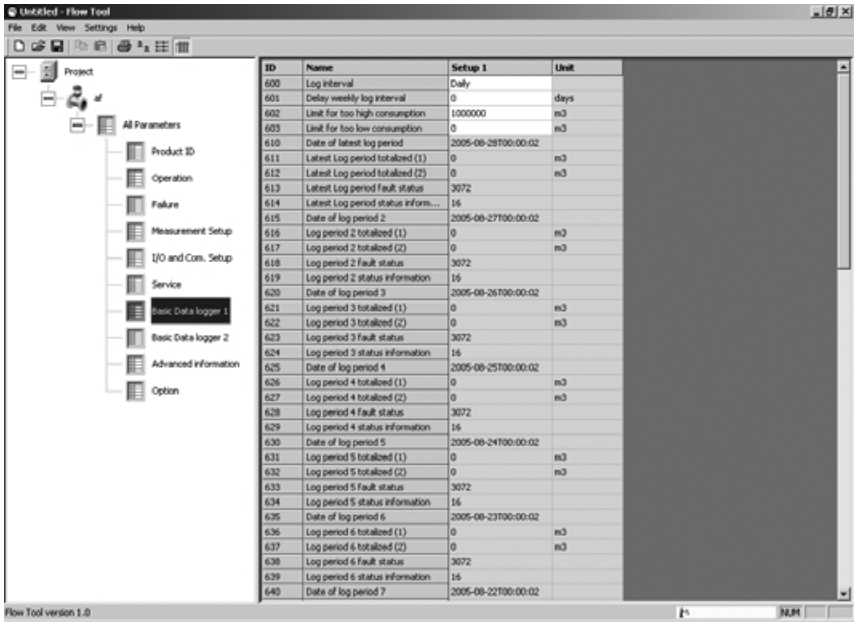

The integrated data logger has 26 logging periods in which data can be stored daily, weekly or monthly. The logger stores the consumption for totalizer 1 and totalizer 2 in the selected period. Forward consumption is stored as a positive value and reverse consumption is stored as a negative value. Alarm and meter status are also stored for the same period to indicate alarms that have been active, or that revenue data has been influenced in the specific period.

ID	Name	Setup 1	Unit
600	Log interval	Daily	
601	Delay log interval	0	days
602	High log consumption alarm	1000000.000000	m3
603	Low log consumption alarm	0.000000	m3
610	Date of last logging 1	2004-05-26T00:00:34	
611	Last Log1 Totalizer 1	0.000000	m3
612	Last Log1 Totalizer 2	0.000000	m3
613	Last Log1 fault status	1024	
614	Last Log1 status information	153	

The logged information has a time and date stamp. The data logger never stops storing data - old data is overwritten following the first in/first out principle, i.e. log 1 is the last stored information which is moved to log 2 when the next logging is made and so on.

The consumption alarm indicates that the actual consumption on totalizer 1 is above or below the consumption limits.

C.9 Battery configuration

Battery figures (generated as customer parameter list, see section Customer-selected parameter list in chapter Setting the basic parameters show power management information.

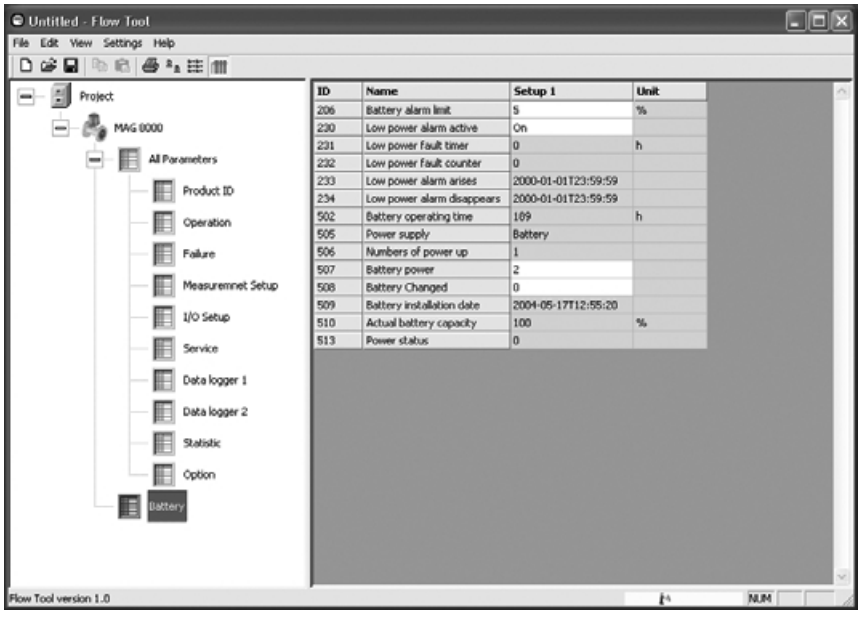

ID	Name	Setup 1	Unit
206	Battery alarm limit	5	%
230	Low power alarm active	On	
231	Low power fault timer	0	h
232	Low power fault counter	0	
233	Low power alarm arises	2000-01-01T23:59:59	
234	Low power alarm disappears	2000-01-01T23:59:59	
502	Battery operating time	189	h
505	Power supply	Battery	
506	Numbers of power up	1	
507	Battery power	2	
508	Battery Changed	0	
509	Battery installation date	2004-05-17T12:55:20	
510	Actual battery capacity	100	%
513	Power status	0	

Figure C-5 Battery configuration

At each battery replacement the capacity is reset to 100% (parameters 508 to 510) which is then reduced with the real meter consumption every 4 hours.

The battery limit (parameter 206) is the level at which the low power alarm is activated generating an alarm or call-up (if configured). The power status (parameter 513) follows the battery symbol on the display.

When switching between battery power from internal and external battery packs, "Battery power" (parameter 507) must be adjusted to match the actual number of batteries connected.

Qualification certificate

D

The qualification certificate is an enhancement of the PDM tool which enables printing of a MAG 8000 status report using the MAG 8000 IrDA communication port and the MODBUS RTU protocol.

Note

Scope

The MAG 8000 Qualification Certificate is a qualification report of device functionality and **NOT** a tool for measurement accuracy verification like the MAG VERIFICATOR (FDK-083F5060 or FDK-083F5061).

The MAG 8000 uses two main physical components for communication:

- The IrDA sensor on the MAG 8000
- An IrDA interface cable

D.1 Commissioning

The qualification certificate is generated from PDM via the following steps:

1. Enabling insulation test
2. Uploading the device data to the PC
3. Generating the qualification certificate

Finally, the service technicians must evaluate the result.

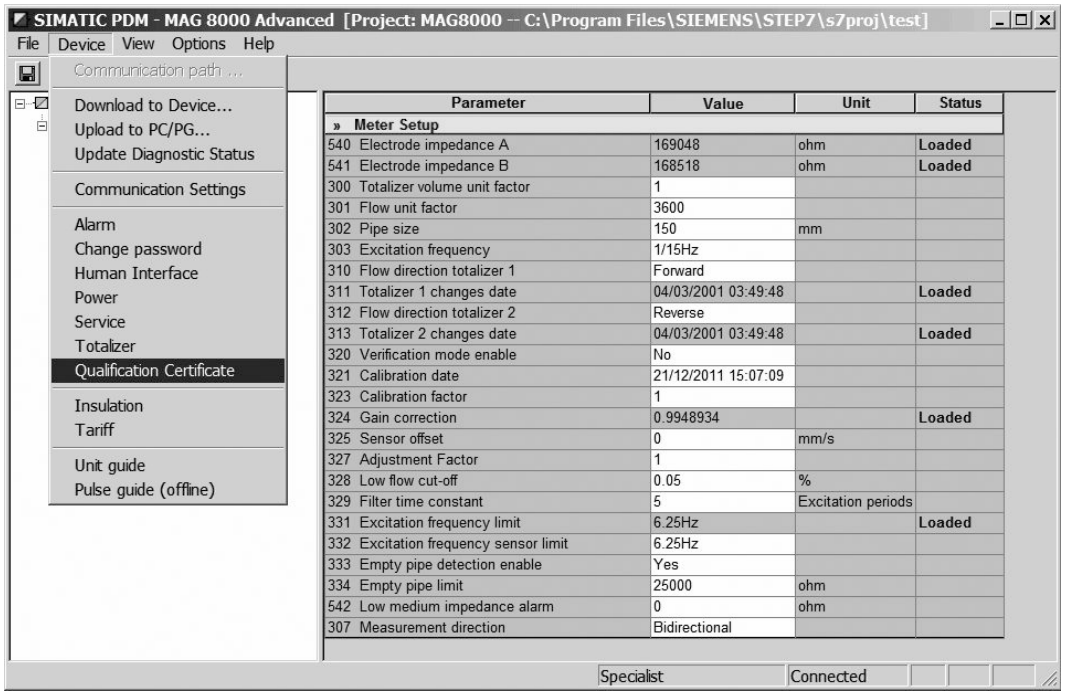

D.2 Enabling insulation test

The insulation test must be carried out on the advance version of the MAG 8000 or MAG 8000 CT before generating the Qualification Certificate. The procedures for enabling the insulation test are shown below.

Set "Insulation test enable" to "Yes" if not already enabled.

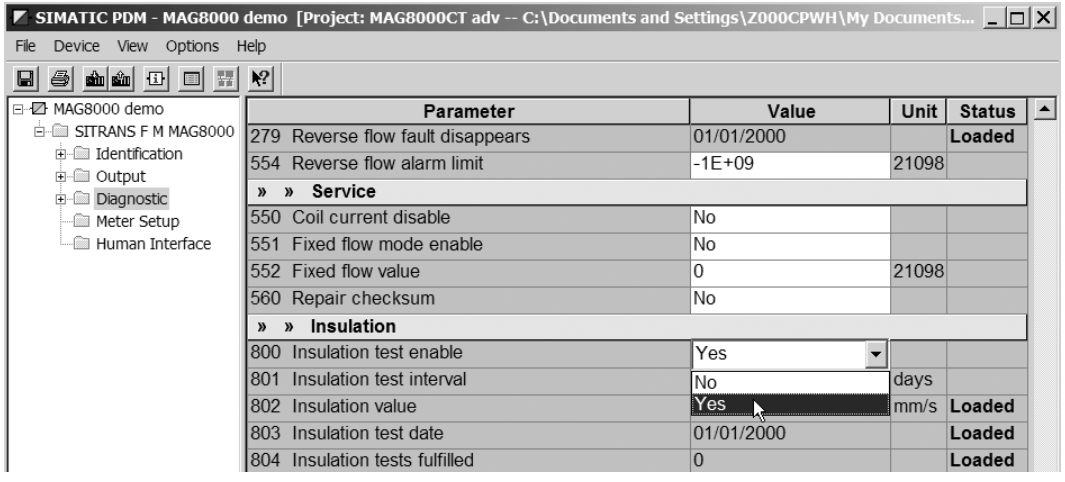

Select “Device” → “Download to Device ...” to download the change to the device.

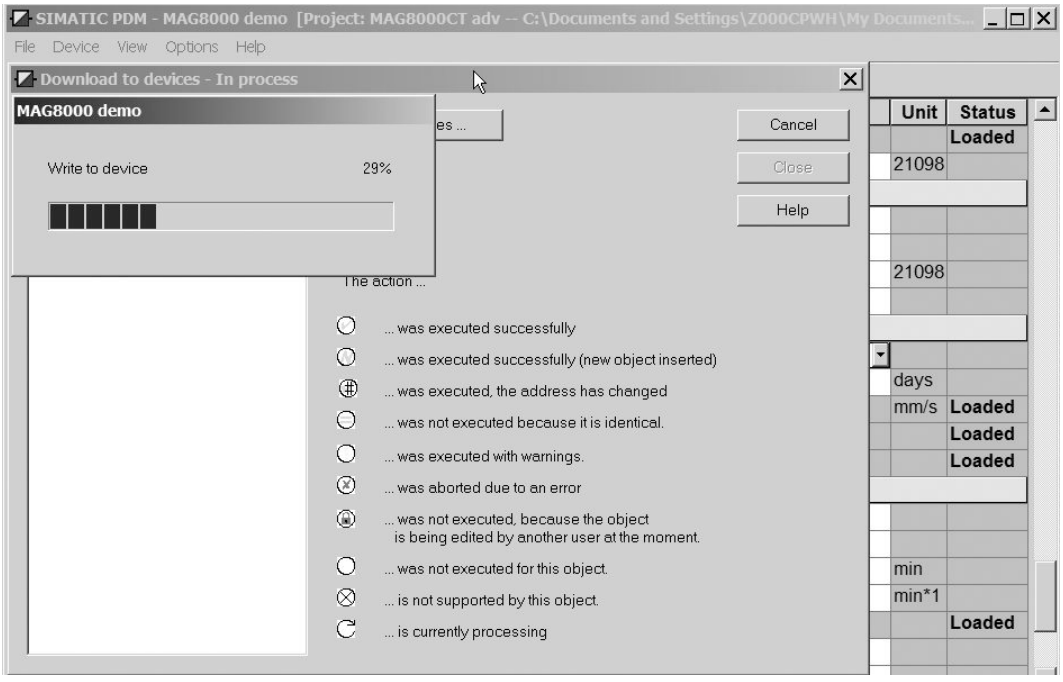

Wait at least three minutes after downloading the change to the device before carrying out the first insulation test. Further details are available in section “Insulation test” in chapter "Built-in functions" (Page 89).

D.3 Uploading the device data to the pc

Select "Device" → "Upload to PC/PG" to load all device parameters from the device to the pc.

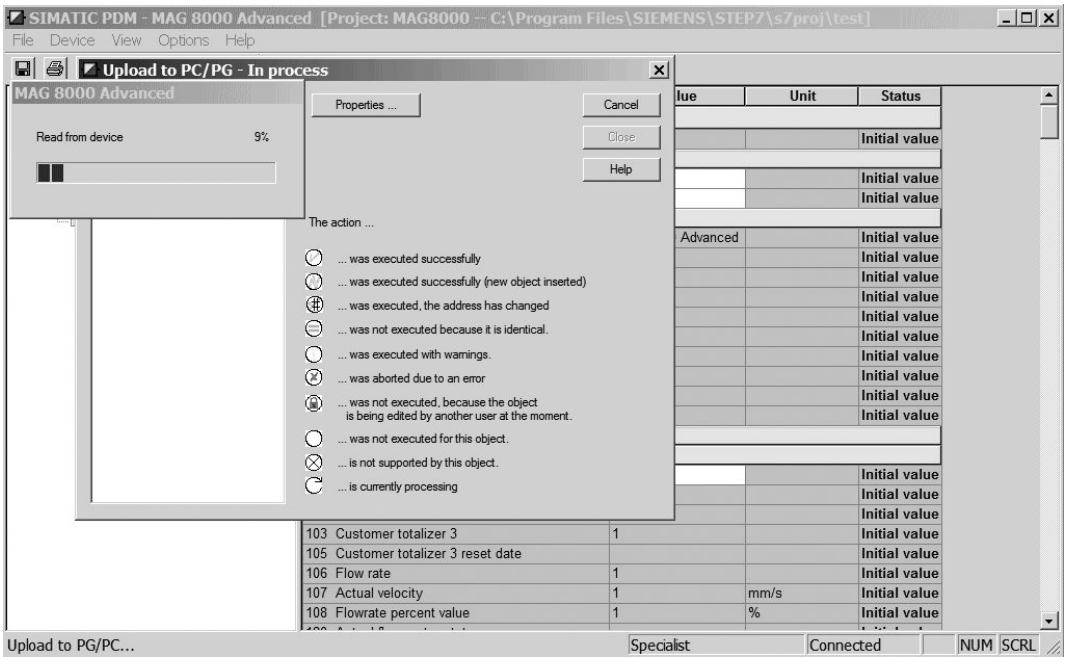

D.4 Generating the qualification certificate

When the device data is completely read to the pc, select "Device" → "Qualification Certificate".

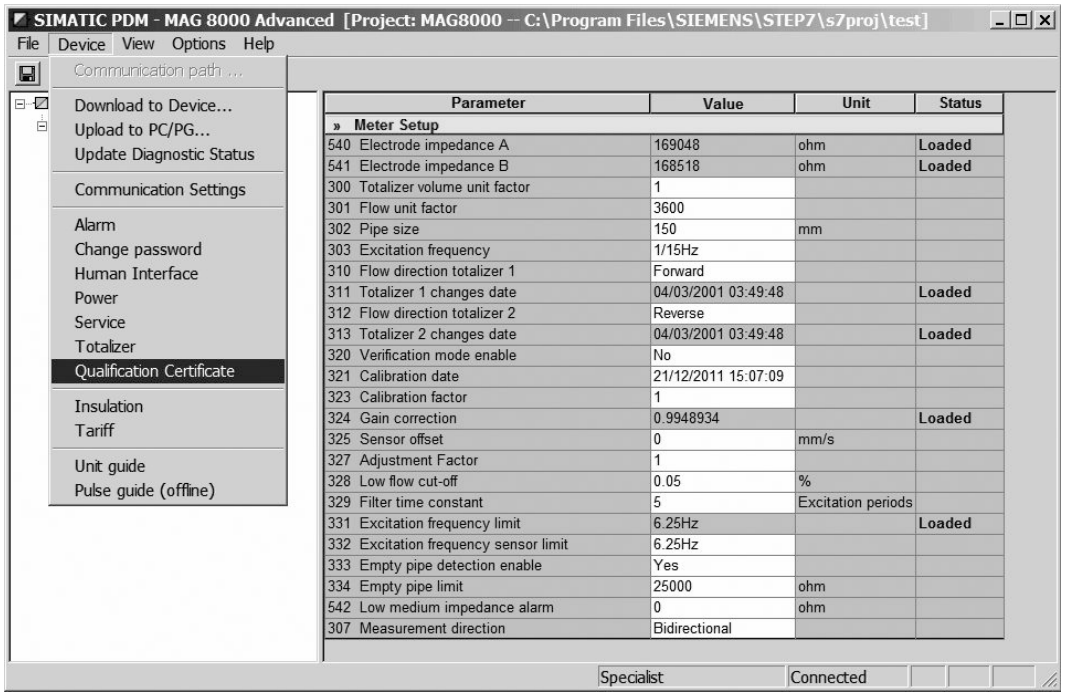

The qualification certificate tool is protected by a service password that is only available for service specialists.

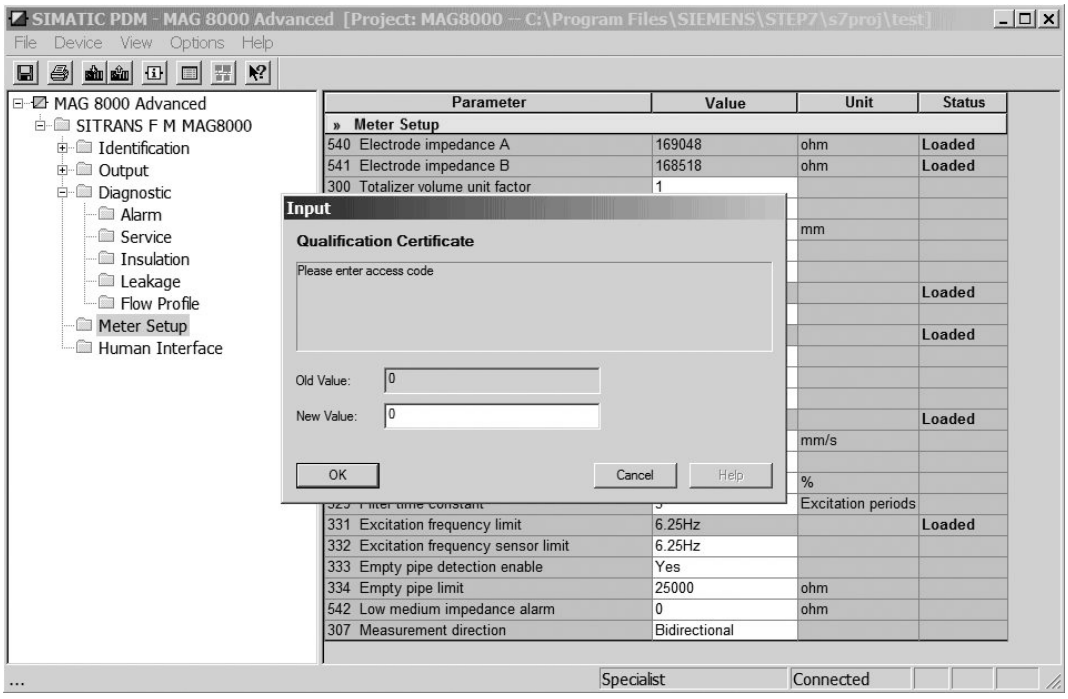

After entering the password, click "OK". Then click "Generate qualification certificate" in the next dialog box. A progress bar shows the percentage of the process.

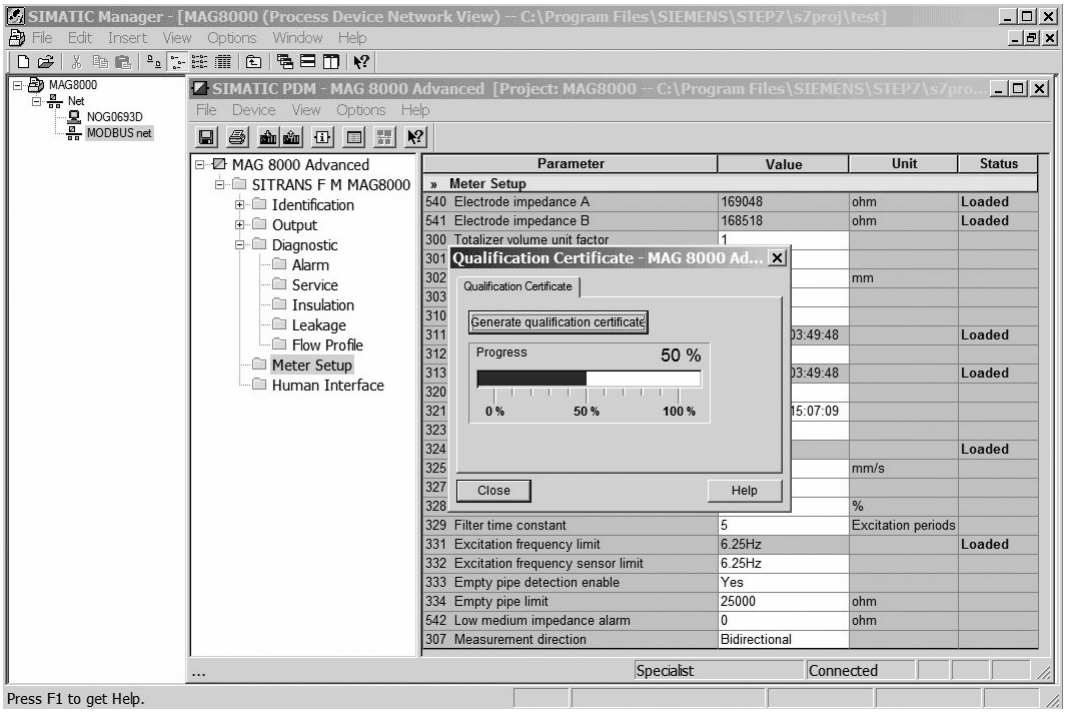

D.5 Result evaluation

The service technicians shall inspect the device parameters on the report and cross-check with the reference values to evaluate if the device status is of proper quality or not. Reference values are available in the document Qualification Certificate Reference Guideline (https://support.industry.siemens.com/cs/ww/en/view/109750126).

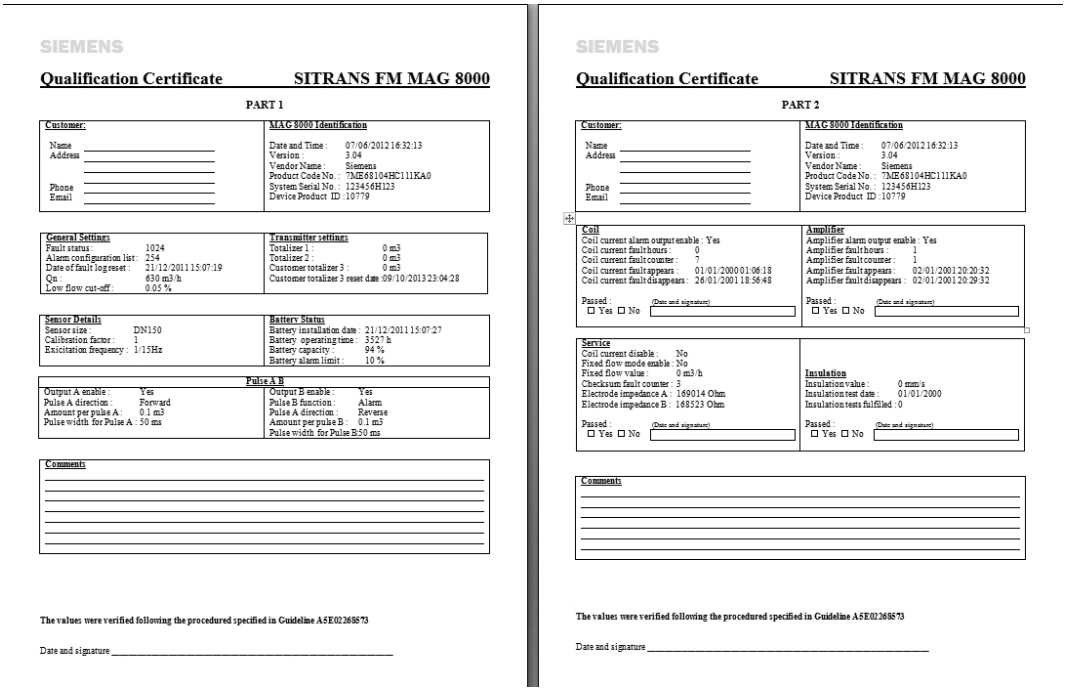

SIEMENS

Qualification Certificate **SITRANS FM MAG 8000**

PART 1

Customer:

Name
Address
Phone
Email

MAG 8000 Identification

Date and Time : 07/06/2012 16:32:13
Version : 3.04
Vendor Name : Siemens
Product Code No. : 7ME68104HC111KA0
System Serial No. : 1234568123
Device Product ID : 10779

General Settings

Fault status : 1024
Alarm configuration list : 254
Date of fault log reset : 21/12/2011 15:07:19
Qn : 630 m3/h
Low flow cut-off : 0.05 %

Transmitter settings

Totalizer 1 : 0 m3
Totalizer 2 : 0 m3
Customer totalizer 3 : 0 m3
Customer totalizer 3 reset date :09/10/2013 23:04:28

Sensor Details

Sensor size : DN150
Calibration factor : 1
Excitation frequency : 1/15Hz

Battery Status

Battery installation date : 21/12/2011 15:07:27
Battery operating time : 3527 h
Battery capacity : 94 %
Battery alarm limit : 10 %

Pulse A B

Output A enable : Yes
Pulse A direction : Forward
Amount per pulse A : 0.1 m3
Pulse width for Pulse A : 50 ms

Output B enable : Yes
Pulse B function : Alarm
Pulse A direction : Reverse
Amount per pulse B : 0.1 m3
Pulse width for Pulse B:50 ms

Comments

The values were verified following the procedured specified in Guideline A5E02268573

Date and signature _____

SIEMENS

Qualification Certificate **SITRANS FM MAG 8000**

PART 2

Customer:

Name
Address
Phone
Email

MAG 8000 Identification

Date and Time : 07/06/2012 16:32:13
Version : 3.04
Vendor Name : Siemens
Product Code No. : 7ME68104HC111KA0
System Serial No. : 1234568H123
Device Product ID : 10779

Coil

Coil current alarm output enable : Yes
Coil current fault hours : 0
Coil current fault counter : 7
Coil current fault appears : 01/01/2000 01:06:18
Coil current fault disappears : 26/01/2001 18:56:48

Passed : ☐ Yes ☐ No (Date and signature)

Amplifier

Amplifier alarm output enable : Yes
Amplifier fault hours : 1
Amplifier fault counter : 1
Amplifier fault appears : 02/01/2001 20:20:32
Amplifier fault disappears : 02/01/2001 20:29:32

Passed : ☐ Yes ☐ No (Date and signature)

Service

Coil current disable : No
Fixed flow mode enable : No
Fixed flow value : 0 m3/h
Checksum fault counter : 3
Electrode impedance A : 169014 Ohm
Electrode impedance B : 168523 Ohm

Passed : ☐ Yes ☐ No (Date and signature)

Insulation

Insulation value : 0 mm/s
Insulation test date : 01/01/2000
Insulation tests fulfilled : 0

Passed : ☐ Yes ☐ No (Date and signature)

Comments

The values were verified following the procedured specified in Guideline A5E02268573

Date and signature _____

Unit conversion table

Totalizer / Volume unit (parameter 8)	Correction factor parameter 300
Default	1 m^3
m^3*100	0.01
Gallon (US)	264.1721
G*100 (100*Gallon)	2.641721
G*1000 (1000*Gallon)	0.2641721
MG (1000000*Gallon)	0.0002641721
AI (Acre Inches)	0.009728558
AF (Acre ft)	0.0008107132
CF*100 (100*ft^3)	0.3531467
CF*1000 (1000*ft^3)	0.03531467
L*100 (liter)	10
kL (1000*liter)	1
ML (Mega liter)	0.001
BBL42 (US oil barrel)	6.289810743

Flow rate unit (parameter 9)	Correction factor parameter 301
Default	1 m^3/s
m^3/min (m^3/minute)	60
m^3/h (m^3/hour)	3600
m^3/d (m^3/day)	86400
GPS (Gallon/second)	264.1721
GPM (Gallon/minute)	15850.32
GPH (Gallon/hour)	951019.4
GPD (Gallon/day)	22824465
MGPD (1000000*Gallon/day)	22.824465
CFS (ft^3/second)	35.31467
CFM (ft^3/minute)	2118.882
CFH (ft^3/hour)	127132.8
L/s (liter/second)	1000
L/min (liter/minute)	60000
L/h (liter/hour)	3600000
ML/d (1000000*liter/day)	86.4
BBL42/s	6.289810743
BBL42/min	377.3886446
BBL42/h	22643.31867
BBL42/d	543439.6482

Parameter lists

F

Parameter lists

MAG 8000 is delivered with factory settings that are not stored as default values. Because defaults values are not present in the meter, an automatic return to factory values is not possible.

The default settings are available at Siemens Industry Online Support (https://support.industry.siemens.com/cs/products?dtp=Download&mfn=ps&pnid=17328&lc=en-US) under the Flow Tool entry. The Flow Tool is required to be able to read the default settings file.

Visible display information is indicated in the table by menu and index number. Remember to enable displayed menus in parameter 130.

The abbreviations used in the display menu table are: Operator menu = O, Meter menu = M, Service menu = Se, Data Logger menu = L, Statistic menu = St, Revenue menu = R.

Factory settings marked in *italic* cannot be edited.

Note

Change of units

If the unit and factor is changed, all unit-related values become invalid.
It is recommended to reset all unit-related values.

F.1 1-99

Parameter ID	Meter version	Display view	Parameter/data type	Factory settings	Data range
				Fixed parameter or meter data that are not changeable	
1	All	M1	Application identifier	Identity	Max. 15 characters. **Only numbers are visible in the display (letters are shown as "_")**
2	All	-	Application location	Location	Max. 16 characters
3	All	M3	Module type	MLFB dependent	MAG 8000 Basic MAG 8000 Advanced MAG 8000 CT Basic MAG 8000 CT Advanced MAG 8000 Irrigation
4	All	M4	Software version		x.xx
5	All	-	Sensor size	Sensor related	Max. 12 characters. DN 25 to 1200 (1" to 48")
6	All	-	Vendor name	Siemens	Siemens

Parameter ID	Meter version	Display view	Parameter/data type	Factory settings	Data range
				Fixed parameter or meter data that are not changeable	
8	All	-	Totalizer unit	MLFB dependent	Max. 12 characters
9	All	-	Flowrate unit	MLFB dependent	Max. 12 characters
10	All	-	Qn (Q3)	Sensor related	0 to $1x10^9$
11	All	-	Product code number	7ME6810, 7ME6820 or 7ME6880	
12	All	-	Serial number	XXXXXXHXXX	Max. 12 characters

F.2 100-199

Parameter ID	Meter version	Display view	Parameter/data type	Factory settings	Data range
				Fixed parameter or meter data that are not changeable	
100	All	M2	Actual date and time	PS3 production date and time	year-month-day T hours:minutes:seconds
101	All	O1	Totalizer 1	0	0 to $\pm 2x10^9$
102	All	O2	Totalizer 2	0	0 to $\pm 2x10^9$
103	All	O5	Totalizer 3	0	0 to $+\pm 2x10^9$
106	All	-	Flow rate		0 to 1.25 Qn (Q3)
107	All	-	Actual velocity	Measured value	±15 m/s
108	All	-	Flowrate percent value		0 to 125% (Q4)
120	All	-	Actual flow meter status		0 to 255, binary presented with information 1 for bit 0 1: Totalizer 1 or 2 changed or reset 2: Tariff setting changed or reset, 3: Tariff register changed or reset 4: Date - time changed 5: Alarm have been active 6: Fault log has been reset 7: Hardware key has been activated 8: Meter has been powered up If none of the above is active, no flag is set

Parameter ID	Meter version	Display view	Parameter/data type	Factory settings	Data range
				Fixed parameter or meter data that are not changeable	
130	All	-	Menu active	63=all menus active	0 to 63, binary presented with information 1 for bit 0 1: Operator menu 2: Meter info menu 3: Service menu 4: Log menu 5: Statistic menu 6: Revenue menu If none of the above is active, the message is: None active
131	All	-	Default operator menu index	Totalizer 1	Totalizer 1, Totalizer 2, Actual Flow rate, Fault codes, Customer Totalizer

F.3 200-299

Parameter ID	Meter version	Display view	Parameter/data type	Factory settings	Data range
				Fixed parameter or meter data that are not changeable	
200	All	O4	Fault status	No faults	0 to 8191, binary presented with information 1 for bit 0 1: Insulation error 2: Coil current error 3: Amplifier overload 4: Database checksum error 5: Low power warning 6: Flow overflow warning 7: Pulse A overload warning 9: Consumption interval warning 10/L: Leakage warning 11/E: Empty pipe warning 12/C: Low impedance (high conductivity) warning 13/d: High flow limit warning 14/A: Reverse flow warning If no error/warning is pending, the message is "No faults"
201	All	-	Alarm configuration list	254 = Alarm 2 to 8 enabled	0 to 8191, See 200 If no alarm is enabled, the message is "None enabled"

Parameter ID	Meter version	Display view	Parameter/data type	Factory settings	Data range
				Fixed parameter or meter data that are not changeable	
202	All	-	Date of fault log reset	PS3 production date and time	year-month-day T hours:minutes:seconds
203	All	O4	Non optimal measure time, including the time of device running with insulation test fault, coil current fault, amplifier fault, database checksum fault, flow overload fault, or empty pipe fault.	0	
204	All	-	Reset the fault log and faults	No	Yes / No Value is reset to "No" when uploading device parameters to pc after command execution
205	All	-	Call up acknowledge	No	Yes / No Value is reset to "No" when uploading device parameters to pc after command execution
206	All	-	Battery alarm level	10%	0 to 100%
208	All	-	Reset leakage fault	No	Yes / No Value is reset to "No" when uploading device parameters to pc after command execution
209	All	-	Reset consumption log fault	No	Yes / No Value is reset to "No" when uploading device parameters to pc after command execution
210	All	-	**Insulation alarm output enable**	No	Yes / No
211	All	-	Insulation fault hours	0	
212	All	-	Insulation fault counter	0	
213	All	-	Insulation fault appears	2000-01-01 T 00:00:00	
214	All	-	Insulation fault disappears	2000-01-01 T 00:00:00	
215	All	-	**Coil current alarm output enable**	Yes	Yes / No
216	All	-	Coil current fault hours	0	
217	All	-	Coil current fault counter	0	
218	All	-	Coil current fault appears	2000-01-01 T 00:00:00	
219	All	-	Coil current fault disappears	2000-01-01 T 00:00:00	
220	All	-	**Amplifier alarm output enable**	Yes	Yes / No
221	All	-	Amplifier fault hours		
222	All	-	Amplifier fault counter		
223	All	-	Amplifier fault appears	2000-01-01 T 00:00:00	
224	All	-	Amplifier fault disappears	2000-01-01 T 00:00:00	
225	All	-	**Database alarm output enable**	Yes	Yes / No

Parameter ID	Meter version	Display view	Parameter/data type	Factory settings	Data range
				Fixed parameter or meter data that are not changeable	
226	All	-	Database fault hours	0	
227	All	-	Database fault counter	0	
228	All	-	Database fault appears	2000-01-01 T 00:00:00	
229	All	-	Database fault disappears	2000-01-01 T 00:00:00	
230	All	-	**Low power alarm output enable**	Yes	Yes / No
231	All	-	Low power fault hours	0	
232	All	-	Low power fault counter	0	
233	All	-	Low power fault appears	2000-01-01 T 00:00:00	
234	All	-	Low power fault disappears	2000-01-01 T 00:00:00	
235	All	-	**Flow overflow alarm output enable**	Yes	Yes / No
236	All	-	Overflow fault hours	0	
237	All	-	Overflow fault counter	0	
238	All	-	Overflow fault appears	2000-01-01 T 00:00:00	
239	All	-	Overflow fault disappears	2000-01-01 T 00:00:00	
240	All	-	**Pulse A overload alarm output enable**	Yes	Yes / No
241	All	-	Pulse A overload fault hours	0	
242	All	-	Pulse A overload fault counter	0	
243	All	-	Pulse A overload fault appears	2000-01-01 T 00:00:00	
244	All	-	Pulse A overload fault disappears	2000-01-01 T 00:00:00	
245	All with FW 3.12 and later	-	Pulse B overload alarm output enable	Yes	Yes / No
246	All with FW 3.12 and later	-	Pulse B overload fault hours	0	
247	All with FW 3.12 and later	-	Pulse B overload fault counter	0	
248	All with FW 3.12 and later	-	Pulse B overload fault appears	2000-01-01 T 00:00:00	
249	All with FW 3.12 and later	-	Pulse B overload fault disappears	2000-01-01 T 00:00:00	
250	All	-	**Consumption alarm output enable**	No	Yes / No

Parameter ID	Meter version	Display view	Parameter/data type	Factory settings	Data range
				Fixed parameter or meter data that are not changeable	
251	All	-	Consumption fault hours	0	
252	All	-	Consumption fault counter	0	
253	All	-	Consumption fault appears	2000-01-01 T 00:00:00	
254	All	-	Consumption fault disappears	2000-01-01 T 00:00:00	
255	All	-	**Leakage alarm output enable**	No	Yes / No
256	All	-	Leakage fault hours	0	
257	All	-	Leakage fault counter	0	
258	All	-	Leakage fault appears	2000-01-01 T 00:00:00	
259	All	-	Leakage fault disappears	2000-01-01 T 00:00:00	
260	All	-	**Empty pipe alarm output enable**	No	Yes / No
261	All	-	Empty pipe fault timer	0	
262	All	-	Empty pipe fault counter	0	
263	All	-	Empty pipe fault appears	2000-01-01 T 00:00:00	
264	All	-	Empty pipe fault disappears	2000-01-01 T 00:00:00	
265	All	-	**Low impedance alarm output enable**	No	Yes / No
266	All	-	Low impedance fault hours	0	
267	All	-	Low impedance fault counter	0	
268	All	-	Low impedance fault appears	2000-01-01 T 00:00:00	
269	All	-	Low impedance fault disappears	2000-01-01 T 00:00:00	
270	All	-	**High flow alarm output enable**	No	Yes / No
271	All	-	High flow alarm fault timer	0	
272	All	-	High flow alarm fault counter	0	
273	All	-	High flow alarm fault appears	2000-01-01 T 00:00:00	
274	All	-	High flow alarm fault disappears	2000-01-01 T 00:00:00	
275	All	-	**Reverse high flow alarm output enable**	No	Yes / No
276	All	-	Reverse high flow alarm fault hours	0	
277	All	-	Reverse high flow alarm fault counter	0	
278	All	-	Reverse high flow appears	2000-01-01 T 00:00:00	
279	All	-	Reverse high flow disappears	2000-01-01 T 00:00:00	

F.4 300-399

Parameter ID	Meter version	Display view	Parameter/data type	Factory settings	Data range
				Fixed parameter or meter data that are not changeable	
300	All	-	Totalizer volume unit factor	MLFB-dependent	0 to 1*x0^{10}
301	All	-	Flow unit factor	MLFB-dependent	0 to 1*x0^{10}
302	All	-	Pipe size	Sensor-related	25 to 1200
303	All	-	Meter excitation frequency (in battery power mode)	1/15 Hz	1/60 Hz, 1/30 Hz, 1/15 Hz, 1/5 Hz, 1.5625 Hz, 3.125 Hz, 6.25 Hz
304	All	-	Mains frequency	MLFB-dependent	50 or 60 Hz mains
305	All	-	Decimal point	MLFB-dependent	No point, One digit after point, Two digits after point, Three digits after point, Automatic point adjust
306	All	-	Displayed unit	Use m^3 unit	Displayed m^3 unit or an arrow indication for a unit label
307	All	-	Measurement direction	MLFB-dependent	Bidirectional, Forward only, Reverse only
310	All	-	Flow direction totalizer 1	Forward	Forward, Reverse or Bi-directional net flow
311	All	-	Totalizer 1 changes date	PS3 production date and time	
312	All	-	Flow direction totalizer 2	MLFB-dependent	Forward, Reverse or Bi-directional net flow
313	All	-	Totalizer 2 changes date	PS3 production date and time	
320	All	-	Verification mode enable	No	Yes / No Value is reset to "No" when uploading device parameters to pc after four hours
321	All	-	Calibration date	Calibration date	year-month-day T hours:minutes:seconds
323	All	-	Calibration factor	Sensor-related	
324	All	-	Gain correction	Sensor-related	
325	All	-	Sensor offset	Sensor-related	
327	All	-	Adjustment Factor	1	-2 to 2
328	All	-	Low flow cut-off	MAG 8000 Standard (7ME6810) 0.05 % for FW 3.07 and lower. **For FW 3.09 see table F-1 below.**	0 to 9.9 %
				MAG 8000 CT (7ME6820) 0.25 % for FW 3.07 and lower. **For FW 3.09 see table F-2 below.**	
				15 mm/s for FW 3.11 onwards	0 to 999 mm/s

Parameter ID	Meter version	Display view	Parameter/data type	Factory settings			Data range
				Fixed parameter or meter data that are not changeable			
329	All	-	Filter time constant		**Battery-powered**	**Main-powered**	1 to 1000
				DN 25 to DN 150	5	470	
				DN 200 to DN 600	5	240	
				DN 700 to DN 1200	5	120	
331	All	-	Excitation frequency limit	6.25 Hz for advanced version and 1/15 Hz for basic version			
332	All	-	Excitation frequency sensor limit	Sensor-related			7ME6810 and 7ME6820: 6.25 Hz (DN 25 to 200 (1" to 8")) 3.125 Hz (DN 250 to 600 (10" to 24")) 1.5625 Hz (DN 700 to 1200 (28" to 48")) 7ME6880: 3.125 Hz (DN 25 to 600 (1" to 24")) 1.5625 Hz (DN 700 to 1200 (28" to 48"))
333	All	-	Empty pipe detection enable	Yes			Yes / No
334	All	-	Empty pipe limit	25000 Ω			0 to 2.15×10^9

Table F-1 **MAG 8000 Standard (7ME6810) parameter 328 FW 3.09**

Sensor size	Parameter value
DN 25 (1")	0.16
DN 40 (1½")	0.15
DN 50 (2")	0.17
DN 65 (2½")	0.18
DN 80 (3")	0.17
DN 100 (4")	0.17
DN 125 (5")	0.17
DN 150 (6")	0.15
DN 200 (8")	0.17
DN 250 (10")	0.17
DN 300 (12")	0.15
DN 350 (14")	0.15
DN 400 (16")	0.15

Sensor size	Parameter value
DN 450 (18")	0.15
DN 500 (20")	0.15
DN 600 (24")	0.15
DN 700 (27½")	0.15
DN 750 (29½")	0.15
DN 800 (31")	0.15
DN 900 (35")	0.15
DN 1000 (39")	0.15
DN 1050 (41")	0.15
DN 1100 (43")	0.15
DN 1200 (47")	0.15

Table F-2 **MAG 8000 CT (7ME6820) parameter 328 FW 3.09**

R (Q3/Q1)	no verification	63	80	160	200	250	100 with no verification	250 with no verification
DN 50 (2")	0.17	0.66	0.66	0.27	0.27	0.27	0.42	0.17
DN 65 (2½")	0.18	0.72	0.72	0.28	0.28	0.28	0.45	0.18
DN 80 (3")	0.17	0.68	0.68	0.27	0.27	0.27	0.43	0.17
DN 100 (4")	0.17	0.67	0.67	0.27	0.27	0.27	0.42	0.17
DN 125 (5")	0.17	0.66	0.66	0.27	0.27	0.27	0.41	0.17
DN 150 (6")	0.15	0.60	0.60	0.24	0.24	0.24	0.38	0.15
DN 200 (5")	0.17	0.68	0.68	0.27	0.27	0.27	0.42	0.17
DN 250 (10")	0.17	0.66	0.66	0.27	0.27	0.27	0.42	0.17
DN 300 (12")	0.24	0.61	0.38	0.24	0.24	0.24	0.38	0.24
DN 350 (14")	0.21	0.52	0.32	0.32	0.32	0.32	0.52	0.21
DN 400 (16")	0.17	0.68	0.42	0.42	0.42	0.42	0.42	0.17
DN 450 (18")	0.21	0.34	0.21	0.14	0.14	0.14	0.21	0.21
DN 500 (20")	0.17	0.42	0.27	0.17	0.17	0.17	0.27	0.17
DN 600 (16")	0.24	0.38	0.24	0.15	0.15	0.15	0.24	0.24

Table F-3 Flow rate at low flow cutoff = 15mm/s

Sensor size	Flow rate (m^3/h)
DN 25 (1")	0.027
DN 40 (1½")	0.068
DN 50 (2")	0.11
DN 65 (2½")	0.18
DN 80 (3")	0.27
DN 100 (4")	0.42
DN 125 (5")	0.66

Sensor size	Flow rate (m^3/h)
DN 150 (6")	0.95
DN 200 (8")	1.70
DN 250 (10")	2.65
DN 300 (12")	3.82
DN 350 (14")	5.20
DN 400 (16")	6.79
DN 450 (18")	8.59
DN 500 (20")	10.60
DN 600 (24")	15.27
DN 700 (27½")	20.78
DN 750 (29½")	23.86
DN 800 (31")	27.14
DN 900 (35")	34.35
DN 1000 (39")	42.41
DN 1050 (41")	46.76
DN 1100 (43")	51.32
DN 1200 (47")	61.07

F.5 400-499

Parameter ID	Meter version	Display view	Parameter/data type	Factory settings	Data range
				Fixed parameter or meter data that are not changeable	
400*	All	-	Output A enable	MLFB-dependent	Yes / No
401*	All	Se3	Pulse A direction	Forward	Forward, Reverse, Forward net, Reverse net
402*	All	Se3	Amount per pulse A	Sensor-related	0 to $1x10^9$
403*	All	-	Pulse width for pulse A	50 ms	10 ms, 25ms, 50 ms, 100 ms, 500 ms, 5 ms, 0.5 ms
404*	All	-	Output B enable	MLFB-dependent	Yes / No
405*	All	Se4	Pulse B function	Alarm	Pulse, Alarm, Call-up
406*	All		Pulse B direction	Reverse	Forward, Reverse, Forward net, Reverse net
407*	All	Se4	Amount per pulse B	Sensor-related	0 to $1x10^9$
408*	All		Pulse width for pulse B	50 ms	10 ms, 50 ms, 100 ms, 500 ms
420	All	M5	Device Communication Address	1	1 to 247
421**	All	M6	Baud rate	19 200	1200, 2400, 4800, 9600, 19 200, 38 400
422**	All	M7	Parity	Even 1 stop	Even 1 stop, Odd 1 stop, None 1 stop, None 2 stop,
423**	All	-	Interframe space	35	35 to 255

Parameter ID	Meter version	Display view	Parameter/data type	Factory settings	Data range
				Fixed parameter or meter data that are not changeable	
424**	All	-	Response delay	5	1 to 50 ms
425	All	-	Reset communication driver	No	Yes / No This parameter is removed from PDM parameter list. The functionality is implemented via PDM menu "Device" → "Communication Settings" → "Transfer"

*: The parameter is accessible via PDM menu "Device" →"Pulse guide offline".
**: The parameter is accessible via the PDM menu "Device" → "Communication settings".

F.6 500-599

Parameter ID	Meter version	Display view	Parameter/data type	Factory settings	Data range
				Fixed parameter or meter data that are not changeable	
500	All	-	Latest service date	PS3 production date and time	year-month-day T hours:minutes:seconds
501	All	-	Operating hours since power-up	0	hours
502	All	-	Battery operating time	0	hours
505	All	-	Power supply	Power supply level	Battery or mains power
506	All	-	Numbers of power-up	0	65535
507	All	-	Battery power	MLFB-dependent	1 to 4 batteries
508	All	-	Battery change enable	No	Yes / No
509	All	Se1	Battery installation date	PS3 production date and time	year-month-day T hours:minutes:seconds
510	All	Se2	Actual battery capacity	100%	100 to 0%
511	All	-	Communication module type	MLFB-dependent	No module, RS 485, RS 232, RS 232 always connected
512	All	-	Number of excitations since last battery reset	0	

Parameter ID	Meter version	Display view	Parameter/data type	Factory settings	Data range
				Fixed parameter or meter data that are not changeable	
513	All	-	Power status	0	Normal operation, 1: Battery alarm. Actual battery capacity is below battery alarm level (% of max capacity) 2: Too low power (enters stand by mode) 3: As value 1 and 2 together 4: External power gone 5: As value 1 and 4 together 6: As value 2 and 4 together 7: As value 1 and 2 and 4 together 8: Mains power in operation
514	All	-	Transmitter temperature	Actual degree celsius	
520	All with FW 3.12 and later	-	Calibration temperature	Configurable	Ambient temperature during test
521	All with FW 3.11 and later	-	Temperature offset value	Measured value	-100 °C to +100 °C
522	All with FW 3.12 and later	-	Temperature calibration start	0	Yes / No
540	All	-	Electrode impedance A	Measured values	0 to 185 000 ohm
541	All	-	Electrode impedance B	Measured values	0 to 185 000 ohm
542	All	-	Low medium impedance alarm	0	0 to $2.15x10^9$
550	All	-	Coil current disable	No	Yes / No
551	All	-	Fixed flow mode enable	No	Yes / No Value is reset to "No" in 4 hours.
552	All	-	Fixed flow value	0	$-1x10x10^9$ to $1x10x10^9$
553	All	-	High flow alarm limit	1 000 000 000	0 to $1x10^9$
554	All	-	Reverse flow alarm limit	$-1x10^9$	$-1x10^9$ to $1x10^9$
560	All	-	Repair checksum	No	Yes / No Value is reset to "No" when uploading device parameters to pc after command execution
570	All	-	Device Product ID	vendor id = 42 product id = 27	Siemens MAG 8000 product ID: vendor id = 42 product id = 27

Parameter ID	Meter version	Display view	Parameter/data type	Factory settings	Data range
				Fixed parameter or meter data that are not changeable	
590	All with FW 3.07 and later	-	Raw velocity	Measured value	
591	All with FW 3.11 and later	-	Suppress count	-	
592	All with FW 3.07 and later	-	Electrode potential	Measured value	within ±1.2V
593	All with FW 3.12 and later	-	Unfiltered electrode impedance A	Measured value	
594	All with FW 3.12 and later	-	Unfiltered electrode impedance B	Measured value	

F.7 600-799

Parameter ID	Meter version	Display view	Parameter/data type	Factory settings	Data range
				Fixed parameter or meter data that are not changeable	
600	All	-	Log interval	Monthly	Daily, Weekly (7 days), Monthly
601	All	-	Delay of weekly logging from current day to first day logging at 00:00:00	0	0 to 30
602	All	-	- Limit for too high consumption	1 000 000	$-1x10^9$ to $1x10^9$
603	All	-	Limit for too low consumption	0	$-1x10^9$ to $1x10^9$
610*	All	L1	Date of latest log period	2000-01-01 T 00:00:00	year-month-day T hours:minutes:seconds
611*	All	L1	Latest Log period totalized (1)		
612*	All	-	Latest Log period totalized (2)	0	

Parameter ID	Meter version	Display view	Parameter/data type	Factory settings	Data range
				Fixed parameter or meter data that are not changeable	
613*	All	-	Latest Log period fault status*	No faults	Active faults in log period; 1: Insulation error 2: Coil current error 3: Amplifier overload 4: Database checksum error 5: Low power warning 6: Flow overflow warning 7: Pulse A overload warning 9: Consumption interval warning 10/L: Leakage warning 11/E: Empty pipe warning 12/C: Low impedance/ high conductivity warning 13/d: High flow limit warning 14/15/16: Not used If none of the errors have been logged, the message is "No faults"
614*	All	-	Latest Log period status information*		Meter operation conditions in log period 1: Totalizer 1 or 2 changed or reset 2: Tariff setting changed or reset 3: Tariff register changed or reset 4: Date - time changed 5: Alarm active in logged period (See alarm fault log for same period) 6: Fault log has been reset 7: HW lock broken 8: Power Up If none of the information has been logged, the message is "No Faults"
615*	All	L2	Date of log period 2		
616*	All	L2	Log period 2 totalized (1)		
617*	All	-	Log period 2 totalized (2)		
618*	All	-	Log period 2 fault status		See 613
619*	All	-	Log period 2 status information		See 614
620*	All	L3	Date of log period 3		
621*	All	L3	Log period 3 totalized (1)		
622*	All	-	Log period 3 totalized (2)		
623*	All	-	Log period 3 fault status		See 613
624*	All	-	Log period 3 status information		See 614
625*	All	L4	Date of log period 4		
626*	All	L4	Log period 4 totalized (1)		

Parameter ID	Meter version	Display view	Parameter/data type	Factory settings	Data range
				Fixed parameter or meter data that are not changeable	
627*	All	-	Log period 4 totalized (2)		
628*	All	-	Log period 4 fault status		See 613
629*	All	-	Log period 4 status information		See 614
630*	All	L5	Date of log period 5		
631*	All	L5	Log period 5 totalized (1)		
632*	All	-	Log period 5 totalized (2)		
633*	All	-	Log period 5 fault status		See 613
634*	All	-	Log period 5 status information		See 614
635*	All	L6	Date of log period 6		
636*	All	L6	Log period 6 totalized (1)		
637*	All	-	Log period 6 totalized (2)		
638*	All	-	Log period 6 fault status		See 613
639*	All	-	Log period 6 status information		See 614
640'	All	L7	Date of log period 7		
641*	All	L7	Log period 7 totalized (1)		
642*	All	-	Log period 7 totalized (2)		
643*	All	-	Log period 7 fault status		See 613
644*	All	-	Log period 7 status information		See 614
645*	All	L8	Date of log period 8		
646*	All	L8	Log period 8 totalized (1)		
647*	All	-	Log period 8 totalized (2)		
648*	All	-	Log period 8 fault status		See 613
649*	All	-	Log period 8 status information		See 614
650*	All	L9	Date of log period 9		
651*	All	L9	Log period 9 totalized (1)		
652*	All	-	Log period 9 totalized (2)		
653*	All	-	Log period 9 fault status		See 613
654*	All	-	Log period 9 status information		See 614
655*	All	L10	Date of log period 10		
656*	All	L10	Log period 10 totalized (1)		
657*	All	-	Log period 10 totalized (2)		
658*	All	-	Log period 10 fault status		See 613
659*	All	-	Log period 10 status information		See 614
660	All	L11	Date of log period 11		
661*	All	L11	Log period 11 totalized (1)		

Parameter ID	Meter version	Display view	Parameter/data type	Factory settings	Data range
				Fixed parameter or meter data that are not changeable	
662*	All	-	Log period 11 totalized (2)		
663*	All	-	Log period 11 fault status		See 613
664*	All	-	Log period 11 status information		See 614
665*	All	L12	Date of log period 12		
666*	All	L12	Log period 12 totalized (1)		
667*	All		Log period 12 totalized (2)		
668*	All	-	Log period 12 fault status		See 613
669*	All	-	Log period 12 status information		See 614
670*	All	L13	Date of log period 13		
671*	All	L13	Log period 13 totalized (1)		
672*	All	-	- Log period 13 totalized (2)		
673*	All	-	Log period 13 fault status		See 613
674*	All	-	Log period 13 status information		See 614
675*	All	L14	Date of log period 14		
676*	All	L14	Log period 14 totalized (1)		
677*	All	-	Log period 14 totalized (2)		
678*	All	-	Log period 14 fault status		See 613
679*	All	-	Log period 14 status information		See 614
680*	All	L15	Date of log period 15		
681*	All	L15	Log period 15 totalized (1)		
682*	All	-	Log period 15 totalized (2)		
683*	All	-	Log period 15 fault status		See 613
684*	All	-	Log period 15 status information		See 614
685*	All	L16	Date of log period 16		
686*	All	L16	Log period 16 totalized (1)		
687*	All	-	Log period 16 totalized (2)		
688*	All	-	Log period 16 fault status		See 613
689*	All	-	Log period 16 status information		See 614
690*	All	L17	Date of log period 17		
691*	All	L17	Log period 17 totalized (1)		
692*	All	-	Log period 17 totalized (2)		
693*	All	-	Log period 17 fault status		See 613
694*	All	-	Log period 17 status information		See 614
695	All	L18	Date of log period 18		
696*	All	L18	Log period 18 totalized (1)		

Parameter ID	Meter version	Display view	Parameter/data type	Factory settings	Data range
				Fixed parameter or meter data that are not changeable	
697*	All	-	Log period 18 totalized (2)		
698*	All	-	Log period 18 fault status		See 613
699*	All	-	Log period 18 status information		See 614
700*	All	L19	Date of log period 19		
701*	All	L19	Log period 19 totalized (1)		
702*	All	-	Log period 19 totalized (2)		
703*	All	-	Log period 19 fault status		See 613
704*	All	-	Log period 19 status information		See 614
705*	All	L20	Date of log period 20		
706*	All	L20	Log period 20 totalized (1)		
707*	All	-	Log period 20 totalized (2)		
708*	All	-	Log period 20 fault status		See 613
709*	All	-	Log period 20 status information		See 614
710*	All	L21	Date of log period 21		
711*	All	L21	Log period 21 totalized (1)		
712*	All	-	Log period 21 totalized (2)		
713*	All	-	Log period 21 fault status		See 613
714*	All	-	Log period 21 status information		See 614
715*	All	L22	Date of log period 22		
716*	All	L22	Log period 22 totalized (1)		
717*	All	-	Log period 22 totalized (2)		
718*	All	-	Log period 22 fault status		See 613
719*	All	-	Log period 22 status information		See 614
720*	All	L23	Date of log period 23		
721*	All	L23	Log period 23 totalized (1)		
722*	All	-	Log period 23 totalized (2)		
723*	All	-	Log period 23 fault status		See 613
724*	All	-	Log period 23 status information		See 614
725*	All	L24	Date of log period 24		
726*	All	L24	Log period 24 totalized (1)		
727*	All	-	Log period 24 totalized (2)		
728*	All	-	Log period 24 fault status		See 613
729*	All	-	Log period 24 status information		See 614
730*	All	L25	Date of log period 25		
731*	All	L25	Log period 25 totalized (1)		

Parameter ID	Meter version	Display view	Parameter/data type	Factory settings	Data range
				Fixed parameter or meter data that are not changeable	
732*	All	-	Log period 25 totalized (2)		
733*	All	-	Log period 25 fault status		See 613
734*	All	-	Log period 25 status information		See 614
735*	All	L26	Date of log period 26		
736*	All	L26	Log period 26 totalized (1)		
737*	All	-	Log period 26 totalized (2)		
738*	All	-	Log period 26 fault status		See 613
739*	All	-	Log period 26 status information		See 614

*: Can be accessed via PDM menu "View" → "Log".

F.8 800-899

Parameter ID	Meter version	Display view	Parameter/data type	Factory settings	Data range
				Fixed parameter or meter data that are not changeable	
800	All	-	Insulation test enable	No	Yes / No Value is reset to "No" when the test is finished
801	All	-	Insulation test interval	30	0 to 65535
802	All	-	Insulation value		
803	All	-	Insulation test date	2000-01-01 T00:00	year-month- day T hours:minutes:seconds
804	All	-	Insulation tests fulfilled	0	
805	All	-	Insulation test upper limit	2.5 mm/s	
810	Advanced	-	Leakage detection mode	Off	Off / fixed limit / lowest + fixed limit
811	Advanced	-	Leakage source	Flow rate	Flow rate / volume
812	Advanced	-	Start period for leakage detection	120 min = 2:00 [24:00]	0 to 1440 detection minutes (0 to 23:50)
813	Advanced	-	Duration leakage detection	0	0 to 144 (10 to 1440 minutes)
814	Advanced	-	Leakage value unit	Flow / volume unit	The unit is updated once parameter 811 change is downloaded to the device and afterwards uploaded to the pc
815	Advanced	-	Leakage limit	1	0 to $1x10^9$ The unit is updated once parameter 811 change is downloaded to device and afterwards uploaded to pc

Parameter ID	Meter version	Display view	Parameter/data type	Factory settings	Data range
				Fixed parameter or meter data that are not changeable	
816	Advanced	-	- Leakage excitation frequency	1.5625 Hz	1/60 Hz, 1/30 Hz, 1/15 Hz, 1/5 Hz, 1.5625 Hz, 3.125 Hz, 6.25 Hz
817	Advanced	-	Leakage status	No faults	Leakage status: 1: Finished successfully 2: Leakage detection running 3: Leakage detection failed (SystemStatus have fatal error) 4: Leakage detection failed (Empty-pipe detection disabled) 5: Leakage detection failed (Coil current off) 6: Leakage detection failed (Insulation test was active during detection) 7: Leakage detection stopped because leakage parameter was changed. If none of the above-mentioned leakage status messages is pending, the message is "No faults"
818	Advanced	-	Periods with possible leakage		
819	Advanced	-	Leakage periods before alarm	30	0 to 255
820	Advanced	-	Reset leakage period information	No	Yes / No Value is reset to "No" when uploading device parameters to pc after command execution
821	Advanced	St1	Latest leakage period flowrate	0	
822	Advanced	St1	Latest leakage period volume	0	
823	Advanced	-	Lowest measured leakage value	1 000 000 000	The unit is updated once parameter 811 change is downloaded to device and afterwards uploaded to pc
824	Advanced	-	Date of lowest leakage value	2000-01-01 T00:00	year-month-day T hours:minutes:seconds
825	Advanced	-	Highest measured leakage value	$-1x10^9$	The unit is updated once parameter 811 change is downloaded to device and afterwards uploaded to pc
826	Advanced	-	Date of highest leakage value	2000-01-01 T00:00	year-month-day T hours:minutes:seconds
830	Advanced	R8	Next settling date	PS3 production date and time	year-month-day T 23:59:59
831	Advanced	R9	Latest settling date	PS3 production date and time	year-month-day T 23:59:59

Parameter ID	Meter version	Display view	Parameter/data type	Factory settings	Data range
				Fixed parameter or meter data that are not changeable	
832	Advanced	R9	Latest totalizer 1 value	0	
833	Advanced	R10	Previous settling date	PS3 production date and time	year-month-day T hours:minutes:seconds
834	Advanced	R10	Previous totalizer 1 value	0	
840	Advanced		Tariff control mode	Off	Off / time / range / combination
841	Advanced	R7	Date of tariff reset	PS3 production date and time	year-month-day T hours:minutes:seconds
842	Advanced	-	Reset tariff values	No	Yes / No Value is reset to "No" when uploading device parameters to pc after command execution
843	Advanced	R1	Tariff1 volume 1	0	
844	Advanced	R1	Tariff1 period time end	360 min = 6:00 [24:00]	0 to 1439 minutes (23:59)
845	Advanced	R1	Tariff1 upper limit range	15%	0 to 100% Qn (Q3)
846	Advanced	R2	Tariff2 volume 2	0	
847	Advanced	R2	Tariff2 period time end	540 min = 9:00 [24:00]	0 to 1439 minutes (23:59)
848	Advanced	R2	Tariff2 upper limit range	30%	0 to 100% Qn (Q3)
849	Advanced	R3	Tariff3 volume 3	0	
850	Advanced	R3	Tarif3 period time end	720 min = 12:00 [24:00]	0 to 1439 minutes (23:59)
851	Advanced	R3	Tariff3 upper limit range	45%	0 to 100% Qn (Q3)
852	Advanced	R4	Tariff4 volume 4	0	
853	Advanced	R4	Tariff4 period time end	1080min=18:00 [24:00]	0 to 1439 minutes (23:59)
854	Advanced	R4	Tariff4 upper limit range	60%	0 to 100% Qn (Q3)
855	Advanced	R5	Tariff5 volume 5	0	
856	Advanced	R5	Tariff5 period time end	1260 min = 21:00 [24:00]	0 to 1439 minutes (23:59)
857	Advanced	R5	Tariff5 upper limit range	80%	0 to 100% Qn (Q3)
858	Advanced	R6	Tariff6 volume 6	0	
860	Advanced	-	Reset date of statistic inf.	PS3 production date and time	year- month-day T hours:minutes:seconds
861	Advanced	-	Reset statistic information	No	Yes / No Value is reset to "No" when uploading device parameters to pc after command execution
862	Advanced	St2	Lowest flowrate	0	
863	Advanced	St2	Date of lowest flowrate	PS3 production date and time	year-month-day T hours:minutes:seconds
864	Advanced	St3	Highest flowrate	0	
865	Advanced	St3	Date of highest flowrate	PS3 production date and time	year-month-day T hours:minutes:seconds
866	Advanced	St5	Lowest day consumption	0	
867	Advanced	-	Date of lowest day consumption	PS3 production date and time	year-month-day T hours:minutes:seconds
868	Advanced	St6	Highest day consumption	0	

Parameter ID	Meter version	Display view	Parameter/data type	Factory settings	Data range
				Fixed parameter or meter data that are not changeable	
869	Advanced	-	Date of highest day consumption	PS3 production date and time	year-month-day T hours:minutes:seconds
870	Advanced	St4	Day 1 (yesterday) of last week consumption	0	
871	Advanced	-	Day 2 of last week consumption	0	
872	Advanced	-	Day 3 of last week consumption	0	
873	Advanced	-	Day 4 of last week consumption	0	
874	Advanced	-	Day 5 of last week consumption	0	
875	Advanced	-	Day 6 of last week consumption	0	
876	Advanced	-	Day 7 (7 days ago) of last week consumption	0	
877	Advanced	St7	Latest week consumption	0	
878	Advanced	St8	Actual month consumption	0	
879	Advanced	St9	Latest month consumption	0	
880	Advanced	-	Reset date of consumption profile	PS3 production date and time	year-month-day T hours:minutes:seconds
881	Advanced	-	Reset consumption profile	No	Yes / No Value is reset to "No" when uploading device parameters to pc after command execution
882	Advanced	-	Total time in CP range 1	0	
883	Advanced	-	Upper limit in CP range 1	15%	0 to 100% Qn (Q3)
884	Advanced	-	Total time in CP range 2	0	
885	Advanced	-	Upper limit in CP range 2	30%	0 to 100% Qn (Q3)
886	Advanced	-	Total time in CP range 3	0	
887	Advanced	-	Upper limit in CP range 3	45%	0 to 100% Qn (Q3)
888	Advanced	-	Total time in CP range 4	0	
889	Advanced	-	Upper limit in CP range 4	60%	0 to 100% Qn (Q3)
890	Advanced	-	Total time in CP range 5	0	
891	Advanced	-	Upper limit in CP range 5	80%	0 to 100% Qn (Q3)
892	Advanced	-	Total time in CP range 6	0	

Sizing sensor

G

G.1 Sizing table DN 25 to 1200 (1" to 48")

The following table shows the relationship between flow velocity (V), flow quantity (Q) and sensor dimension (DN).

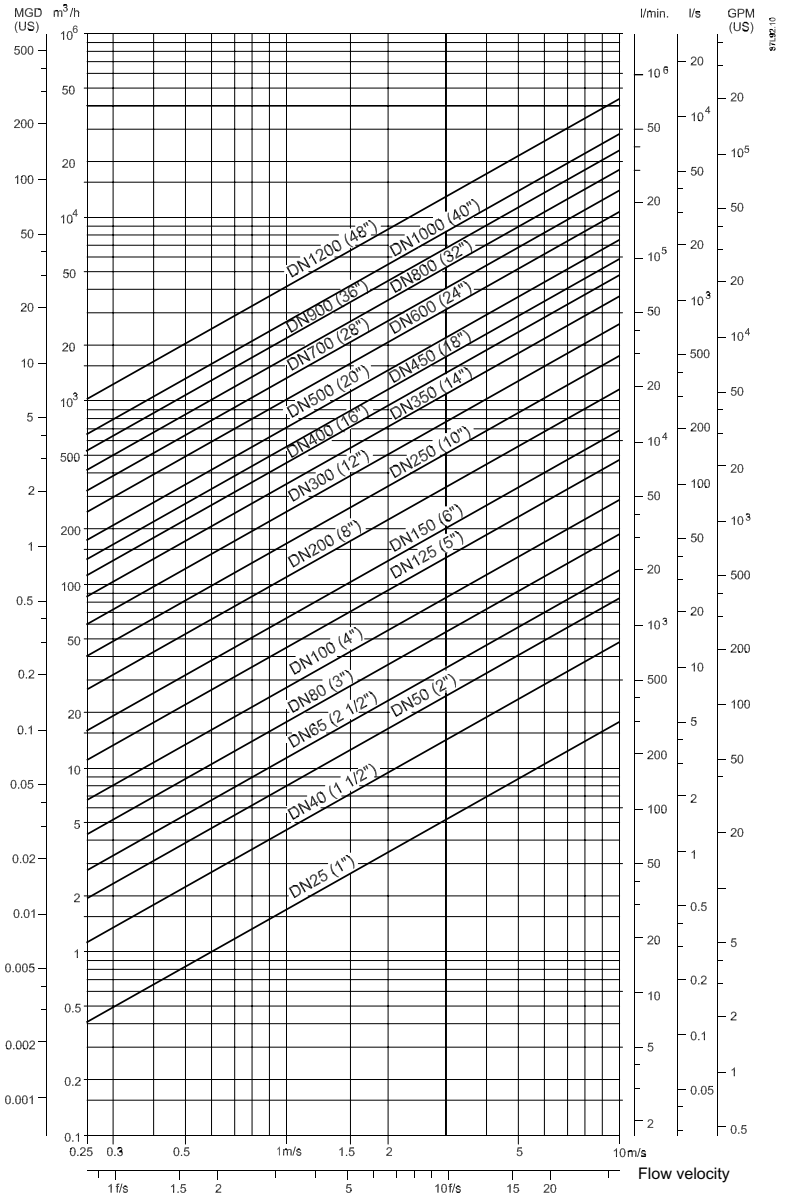

Figure G-1 Sizing table

Guidelines for selection of sensor

Normally the sensor is selected so that V lies within the measuring range 1 to 2 m/s (3 to 7 ft/sec.).

- Min. measuring range: 0 to 0.25 m/s (0 to 0.8 ft/sec.)
- Max. measuring range: 0 to 10 m/s (0 to 33 ft/sec.)

Flow velocity calculation formula

- Metric measures:
  $V = 1273.24 \times Q / Di^2$ (V: [m/s]; Q: [L/s]; Di: [mm])
  or
  $V = 353.68 \times Q / Di^2$ (V: [m/s]; Q: [m^3/h]; Di: [mm])
- Imperial measures:
  $V = Q \times 0.408 / (\text{Pipe I.D.})^2$ (V: [ft/s]; Q: [GPM]; Pipe I.D.: [inch])
  or
  $V = Q \times 283.67 / (\text{Pipe I.D.})^2$ (V: [ft/s]; Q: [MGD]; Pipe I.D.: [inch])

Features

Feature	MAG 8000 basic	MAG 8000 advanced
Measurement frequency (battery power)	Max. 1/15 Hz	Max. 6.25 Hz
Totalizer	3	3
Pulse output	2, max. 50 Hz	2, max. 100 Hz
Communication	Add-on	Add-on
IrDA	Yes	Yes
Time and date	Yes	Yes
Data protection	Yes	Yes
Data logger	Yes	Yes
Application identifier	Yes	Yes
Alarm handling	Yes	Yes
Meter status	Yes	Yes
Diagnostics	Yes	Yes
Battery power management	Yes	Yes
Insulation test	-	Yes
Leakage detection	-	Yes
Meter utilization	-	Yes
Statistics	-	Yes
Tariff	-	Yes
Settle date (Revenue)	-	Yes

Features

Application identification (parameters 1 and 2)

Tag number (visible on display if numbers are selected) and meter location, up to 15 characters per information.

Time and date (parameter 100)

Real time clock and date (max. 15 minutes drift per year)

Totalizer (parameters 101, 102 and 103)

- 3 totalizers: Forward, reverse, bidirectional netflow calculation and freely selectable start value.

Note

CT version

It is not allowed to reset the totalizer for the CT version.

Measurement (parameters 300 and 334)

- Freely selectable volume and flow unit, where m^3 and m^3/h is default in display. All other units are displayed with a display label.
- Excitation frequency in battery operation (manually selected):
  - Basic, max. selectable excitation frequency of 1/15 Hz
  - Advanced, max. selectable excitation frequency of 6.25 Hz and sensor related
  - MAG 8000 default excitation frequency with 2 D-cell battery pack is selected for typically 6 years of operation for MAG 8000 Standard (7ME6810) and MAG 8000 CT (7ME6820).

Size	Default excitation frequency
	MAG 8000 Standard (7ME6810) MAG 8000 CT (7ME6820)
DN 25 to DN 150 (1" to 6")	1/15 Hz
DN 200 to DN 600 (8" to 24")	1/30 Hz
DN 700 to DN 1200 (28" to 48")	1/60 Hz

- Excitation frequency with mains power follows maximum sensor excitation frequency
- Filter constant as numbers of excitations
- Low flow cut-off: 15mm/s factory default value[1)]
- Empty pipe detection (active symbol on display when active)
- Filter selection for mains power frequency (50/60 Hz)
- Correction factor for change of flow direction or to adjust flow measurement

[1)] Siemens warrants the measurement accuracy down to a flow velocity of 15mm/s. For a flow velocity below 15mm/s, we don't warrant the measurement accuracy.

Data logger (Parameters 600 to 739)

- Logging of 26 records: selectable as daily, weekly or monthly logging
- Each logging includes:
  - Consumption on totalizer 1
  - Consumption on totalizer 2
  - Alarm in current period (13 alarms)
  - Meter status (8 values)
  - Alarm on high or low consumption for selected logging period
  - Totalizer 1 values for all 26 periods can be read on the display

Alarm (parameters 200 to 274)

- Active alarm is indicated on the display
- Monitoring of all alarms with statistic recording on each alarm
  - Total hours an alarm has been active
  - Numbers of time the alarm has been activated
  - First time an alarm appears
  - Last time the alarm disappears
- Fatal faults interrupt the measurement, if active
  - Signal insulation – Flow signal immunity is influenced (Advanced version only)
  - Coil current – Fault in driving magnetic sensor field
  - Amplifier – Fault in signal circuit
  - Check sum – Fault in calculation or handling of data
- Warning faults
  - Low Power – Alarm for customer-selectable battery level or power drop-out
  - Flow overflow – Flow in sensor exceeds Qmax (125 % Qn (Q3, Q4))
  - Pulse overflow on output A and B – Selected pulse volume is too small compared to actual flow rate and max. output pulse rate
  - Consumption – Saved data logger consumption exceeds customer selected limit on high or low consumption
  - Leakage – Leakage detected based on customer settings (Advanced version only)
  - Empty pipe – No water in the pipe/sensor
  - Low impedance – Measured electrode impedance below customer low impedance level
  - Flow limit – Actual flow exceeds selected high flow limited

Meter status (parameter 120)

Monitoring of important revenue parameters and data

- Changing totalizers 1 and 2
- Changing tariff totalizer
- Changing tariff settings
- Changing date and time
- Alarm has been active (see alarm log for details)
- Fault log has been reset
- Hardware key has been broken
- Meter has been repowered

Data protection

- All data stored in an EEPROM. Totalizers 1 and 2 are backed up every 10 min., statistic every hour and power consumption and temperature measurement every 4 hours.
- Password protection of all parameters and hardware protection of calibration and revenue parameters.

Battery power management

- Optimal battery information on remaining capacity.
- Calculated capacity includes all consuming elements and available battery capacity is adjusted related to change in ambient temperature.

Diagnostic

- Continuous self test including
  - Coil current to drive the magnetic field
  - Signal input circuit
  - Data calculation, handling and storing
- Features
  - Alarm statistics and logging for fault analyzing
  - Electrode impedance to check actual media contact
  - Flow simulation to check pulse and communication signal chain for correct scaling
  - Number of sensor measurements (excitations)
  - Transmitter temperature (battery capacity calculation)
  - Low impedance alarm for change in media
  - Flow alarm when defined high flow exceeds
  - Insulation test
  - Verification mode for fast measure performance check
- Advanced version includes
  - Leakage detection
  - Consumption profile
  - Flow statistic

Insulation test

Test of signal immunity against disturbances and poor installations. Test interval is selectable and measurement is interrupted during the test period of 4 min. The last flow value is used for totalization.

Leakage detection (Advanced version only)

Monitoring the lowest flow or volume during selected time window within 24 hours. Leakage is detected over a selectable period during which monitored values exceed the possible leakage level. Min. and max. values are stored with date registration. Last store value visible on the display.

Consumption profile (Advanced version only)

6 registers for monitoring total time the meter has operated in different flow intervals. Registered intervals are freely selectable as % of Qn (Q3).

Tariff (Advanced version only)

6 tariff registers count the volume delivered within the selected tariff windows, based on time of day, flow rates, or a combination.

Tariff can also be used for consumption profile where consumption is related to different time intervals or flow rates.

Tariff values visible on the display.

Settling date (Advanced version only)

At midnight (23:59:59) on a predefined date the totalizer 1 index value is stored. Old values are stored to show the latest two totalized 1 index values. Settling values are visible on the display.

Statistic (Advanced version only)

The statistic feature delivers water consumption information to inspect the consumption limits of the installation. The real values are first available after the period is finished. A reset function clears the values and new values are ready after next period. Until the new measured values are available, minimum values are set to maximum value and vice versa, the rest is set to zero.

- Min. flow rate with time and date registration
- Max. flow rate with time and date registration
- Min. daily consumption with date registration
- Max. daily consumption with date registration
- Latest 7 days' total and daily consumption
- Actual month's consumption
- Latest month's consumption

Index

A

Add-on modules
  Electrical connection:Add-on modules, 44
Article number
  on the nameplate, 15

B

Battery unit, 85

C

Catalog
  catalog sheets, 119
Certificates, 11, 119
Commissioning
  With Flow Tool, 45
  With PDM, 45
Customer Support, (Refer to Technical support)

D

Disposal, 86
Downloads, 119

E

Electrical connection, 44
  Safety instructions, 36

F

Flow Tool
  Commissioning, 45

H

Hazardous area
  Laws and directives, 11
History, 7
Hotline, (Refer to Support request)

I

Installation
  Compact, 17
  Indoor/outdoor, 17
  Remote, 17
Items supplied, 8

L

Laws and directives
  Disassembly, 11
  Personel, 11
Lithium batteries, 85
  Return, 85
  Safety, 12

M

Mains supply, 36
Maintenance, 79
Manuals, 119

P

Parameter lists, 147
PDM
  Commissioning, 45
Pressure specifications, 17
Product name, 15

R

Repair, 79
Return procedure, 85

S

Safety, 11
Safety instructions
  Electrical connection, 36
Scope of delivery, 8
Service, 79, 120
Service and support
  Internet, 120

Sizing table, 169
Support, 120
Support request, 120
System components, 13

T

Technical support, 120
    partner, 120
    personal contact, 120
Temperature specifications, 17
Test certificates, 11
Transporting, 23
Type plate, 15

V

Vibrations, 24

W

Warranty, 9