TECHNICAL DOCUMENT

FLUXER
FLOOD CONTROL

Sylax butterfly valves

DN 400 up to 1200 mm

sylax



Description

By concentrating the technologies in the field and by integrating technical solutions of the highest standard, Socla is realising its ambition :
- the competitiveness of a standard range,
- reliability,
- and a comprehensive approach, offering a multiplicity of solutions.

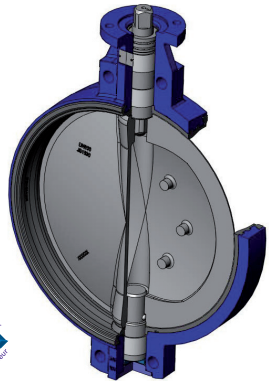

Sylax butterfly valves

DN 400 up to 1200 mm

- Dimensional complement of the Sylax range
- Available in :
  centering lugs (DN400 to 1000)
  tapped lugs (DN400 to 600)
  double flanges (DN400 up to DN1200)
- Vertical and horizontal mounting of the shaft.
- JS1030 ductile iron body (DN400 - 1000) wafer type, DN 400-1200 & DN 1200 double-flange, and DN 400 - 600 lug type body.
- Body epoxy coated 80µm colour blue RAL 5017 (a lot of other coatings on option, please ask our sales department).
- Disc spherically machined. The floating disc eliminates the stress against the liner when actuating the butterfly valve.
- Easy maintenance. Interchangeable disc and liner
- Wide choice of actuations

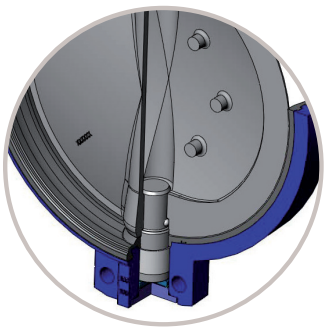

SAFETY

> The anti-ejection of the two-part shaft is ensured by a circlip at the upper level and a bottom at the lower level of the shaft

> 2- part shaft connected to floating disc : high reliability of tightness and torque transmission in the long term.

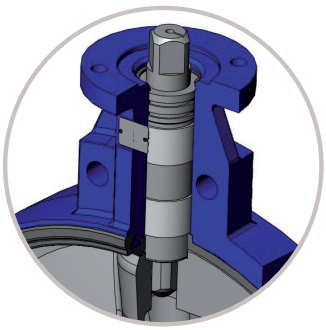

PROTECTION AND RELIABILITY

> Safety reinforced by double water tightness.

> High power transmission with robust connection between the shaft and the disc.

> Complete protection of the shaft and valve body from fluids.

> Reliability of movements with self-lubricating bearings.

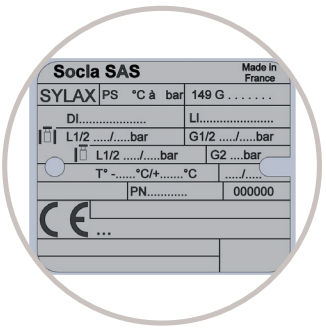

TRACEABILITY

Identification and traceability ensured by riveted metal tag : see on page 13

Spare parts list and materials

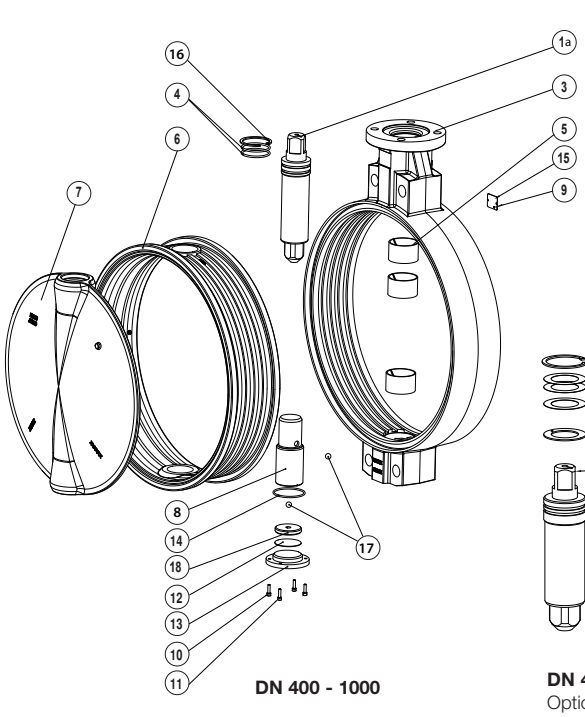

DN 400 - 1000

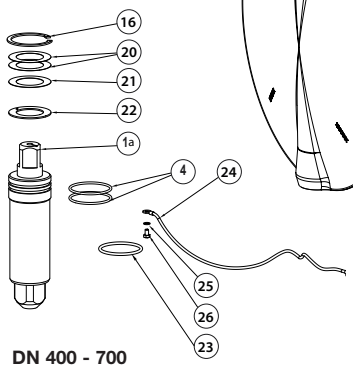

DN 400 - 700
Option 1 : Mounting downwards
Option 2 : ATEX

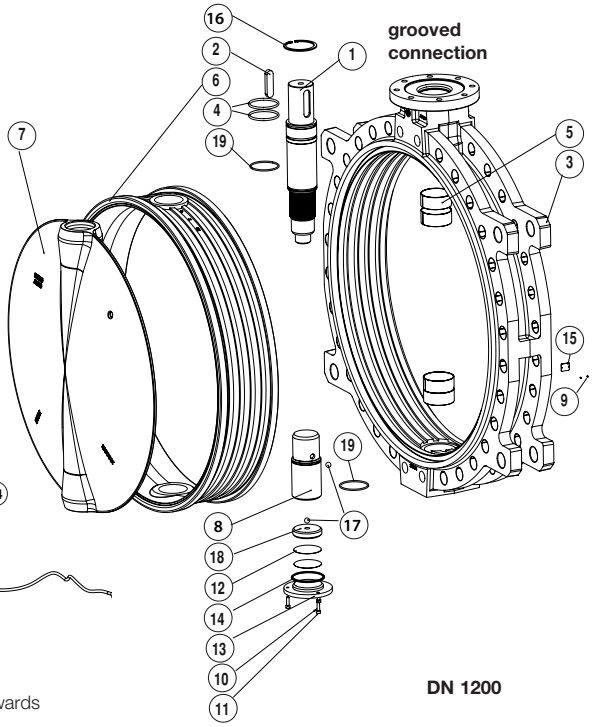

DN 1200

N°	Description	Qty	Materials	EN	ASTM	JIS
1	Upper shaft (3)	1	Stainless steel(1)	X5CrNiCuNb16-4 (1.4542) ou X30Cr13 (1.4028)	630 ou 420	SUS630 ou SUS420J2
1a	Upper shaft square version (3)	1				
2	Key	1	Steel	-	-	-
3	Body	1	Ductile iron	EN GJS 400-15 (JS1030)	-	FCD40
4	O-ring	2	Nitrile	-	-	-
5	Guide bushes	3 or 4	Zinc coated steel + PTFE	-	-	-
6	Liner	1	EPDM	-	-	-
			High content Nitrile	-	-	-
			Silicone	-	-	-
			FKM	-	-	-
7	Disc	1	Ductile iron	EN GJS 400-15 (JS1030)	-	FCD40 ou SC514
			Stainless steel	GX5CrNiMo19-11-2 (1.4408)	-	
			Alu-bronze	CuAl10Fe5Ni5-C (CC333G)	-	
			Alu-bronze Annealing with protective gas/Epoxy	CuAl10Fe5Ni5-C (CC333G)	-	
8	Lower shaft	1	Stainless steel(1)	X5CrNiCuNb16-4 (1.4542) ou X30Cr13 (1.4028)-	630 ou 420	SUS630 ou SUS420J2
9	Rivet	2	Stainless steel	-	-	-
10	Stop washer	3 or 4	Zinc coated steel	-	-	-
11	Screw	3 or 4	Zinc coated steel	-	-	-
12	Packing ring	1 or 2	Steel	S275JR (1.0037)	grC/D	-
13	Bottom	1	Steel	S275JR (1.0037)	grC/D	-
14	O-ring	1	Nitrile	-	-	-
15	Identification plate	1	Aluminium	EN AW - AL995 (EN AW - 1050A)	-	-
16	Circlips	1	Steel browned	-	-	-
17	Ball	2	Stee	100Cr6 (1.3505)	52100	SUJ 2
18	Bottom	1	Zinc coated steel	X30Cr13 (1.4028)	420	SUS420J2
19	O-ring (2)	2	Nitrile	-	-	-

(1) : 1.4542 for DN400 & 1.4028 for others DN - (2) : DN 1200 only - (3) : DN400 - 1200 Transmission shaft/disc with grooved connection : optional

Option DN 400 up to 700

20	Wedge(4)	1 or 2	Steel	S275JR (1.0037)	grC/D	-
21	Wedge(4)	1	Steel	S275JR (1.0037)	grC/D	-
22	Guide bush(4)	1	Steel/PTFE	-	-	-
23	Electro-static tress(5)	1	Tinned copper	-	-	-
24	Braid(5)	1	Tinned copper	-	-	-
25	Stop washer(5)	1	Stainless steel	X5CrNi18-10 (1,4301)	304	SUS 304
26	Screws(5)	1	Stainless steel	A2-70	304	SUS 304

(4) Optional : mounting downwards - (5) Optional : ATEX

Normalisation

DESIGN
According to EN 593 and marking according to EN 19

ISO TOP CONNECTION FOR ACTUATIONS
According to EN ISO 5211

FACE TO FACE
According to 558-1 series 20
ISO 5752 series 20
API 609 table 2

CONNECTING FLANGES see on page 13
According to EN1092-1 and EN1092-2
ASME/ANSI B16.5
BS10-d and BS10-e
JIS B2238 and JIS B2239

TESTS
According to EN12266-1
Resistance and tightness of the body : test P11(1,5 x allowable operating pressure)
Tightness of the seat : test P12 rate A (1,1 x allowable operating pressure)
According to EN12266-2
Anti-static design : test F21

EUROPEAN DIRECTIVES
Our butterfly valves are in accordance to the safety requirements of the following directives. :

· Directive 2014/68/UE : Equipments under pressure PED (Pressure Equipment Directive)

Applies to the design, manufacturing and the assessment of the conformity of pressure equipment, the maximum allowable pressure of which is 0.5 bar.

Pressure equipment for water supply, distribution, and disposal of water is excluded. Depending on the type of pressure equipment, maximum allowable temperature (PS), DN, physical nature of the fluid (liquid, gas or vapour) and the degree of danger of the fluid (group1/2)*, the directive classifies this same equipment into different categories (article 3.3, I, II, III, IV), required for the assessment of conformity with CE marking. The equipment defined in article 3.3 of the directive must not bear the CE marking.

(*) Group 1 : according to rule CE 1272/2008.

Group 2 : all other fluids.

Important notice : the indicated pressure for the different categories of fluids (L1/L2/G1/G2) is under no condition a guarantee of use.Therefore, it is essential to validate the use of products under given operating conditions. Socla is not responsible for alteration of the products to working conditions not previously specified by the customer.

Directive 2014/34/UE : ATEX (EXplosive ATmospheres)

This directive is only applicable for the following atmospheric conditions : -20°C < T < +60°C ; 0,8 bar ≤ P ≤ 1,2 bar.
In this risk analysis, the fluid which passes through the valve is not taken into account. It is under the responsibility of the user to take into consideration the risks generated by the fluid like : heating of the surface of the valve, internal chocks generated by granulates, wave of chocks due to the installation (water hammering), or the risks due to foreign bodies which are inside the installation.

Classification of the bare shaft valve : The marking of the bare shaft valve is : Ex II 2 DG.

Classification of the set valve + actuation :

- Valve with a hand lever : The use of hand levers produced by Socla within a ATEX area do not represent additional risks. The valve with a hand lever is in conformity to the marking : Ex II 2 DG.
- Valve with other actuations : The classification of the valve + actuation supplied by Socla is similar to the lowest classification of the components which composed the assembly.

No additional marking will be used to indicate the classification of the assembly.
If a single element of the combination does not carry the ATEX mark, then the entire valve/control combination does not conform to the ATEX directive The classification of the equipment allows its use in a determinate area; an use in another area is under the responsibility of the user.

Directive 2006/42/CE : Machinery Directive

In its Appendix I it sets a certain number of Essential Health and Safety Requirements which must be met. It applies to motorised butterfly valves, (with electric, pneumatic or hydraulic actuators). According to this Directive, these sets are “Partly Completed Machineries” designed for being integrated into a machine.

“Partly Completed Machinery” means an assembly which is almost machinery but which cannot in itself perform a specific application. A drive system is partly completed machinery. Partly completed machinery is only intended to be incorporated into or assembled with other machinery or other partly completed machinery or equipment, thereby forming machinery to which this Directive applies.

An instruction notice specifying the installation characteristics and the commission of the Lycene is added to every product; It is available on our web site www.socla.com or on request by our sales department.

Pressure

DIRECTIVE 2014/68/UE EQUIPMENTS UNDER PRESSURE

Products manufactured in conformity with the requirements of the directive, according to pressure, DN and fluid (see on the precedent page).

LINERS		DN mm	Cat.	MOUNTING	PFA	PS			
						L1	L2	G1	G2
6 bar	EPDM, Nitrile, White EPDM, White Nitrile, Carbolyxated Nitrile	400 to 500	I	Flange	6	6	6	-	6
				End of line	4	4	4	-	-
		600	I	Flanges	6	6	6	-	5
				End of line	4	4	4	-	-
		700 to 800	I	Flange	6	6	6	-	4
				End of line	4	4	4	-	-
		900 to 1000	I	Flanges	6	6	6	-	3,5
				End of line	4	4	4	-	
		1200	I	Flange	6	6	6	-	2,5
				End of line	4	4	4	-	-
	Silicone, Neoprene, Butyl CSM (Polyethylen chloro-sulfonated), FKM, Natural rubber, White natural rubber	400 to 500	I	Flanges	6	6	6	-	6
				End of line	4	4	4	-	-
		600 to 800	II	Flange	6	6	6	-	6
				End of line	4	4	4	-	
		900 to 1000	II	Flanges	6	6	6	-	5
				End of line	4	4	4	-	-
		1200	II	Flange	6	6	6	-	4
				End of line	4	4	4	-	-
10 bar	EPDM, Nitrile, White EPDM	400 to 1200	I	Flanges	10	10	10	-	-
				End of line	6	6	6	-	-
	CSM (Polyethylen chloro-sulfonated), FKM,	400 to 1200	I	Flange	10	10	10	-	-
				End of line	6	6	6	-	-
16 bar	EPDM, Nitrile	400 to 1200	I	Flanges	16	-	16	-	-
				End of line	8	-	8	-	-
	Neoprene,Butyl, Natural rubber, White natural rubber	400 to 1200	I	Flange	16	16	16	-	-
				End of line	8	8	8	-	-
*20 bar	EPDM, Nitrile	400 to 600	I	Flanges	20	-	20	-	-
				End of line	10	-	10	-	-

NOTE : Butterfly valves of category II used as «end of line», please consult us.

PS : Maximum allowable pressure (in bar) according to Directive 2014/68/UE
PFA : Allowable operating pressure (in bar) for supply, distribution and disposal of water.
* : Double-flange version with stainless steel disc only.

Applications

- Water distribution and supply with the main European approvals, water treatment, most of the fluids for general services.
- Industrial applications such as : Mining, paper-making, shipbuilding, nuclear, environmental and mechanical, food industry (see our list of approvals).
- For special applications, especially for particularly difficult media, contact our technical back office team.

Installation

General remarks :

For safety reasons, the installation must take place under the supervision of authorised people taking account of local safety instructions and advice.

The handling of butterfly valves and their controls must be done by staff trained in all technical aspects of their operation.

Before installation the pipes must be depressurised and purged (empty of its fluid) in order to avoid any danger to the operator.

The pipe work must be correctly aligned so that no extra stress is exerted on the valve casing. Check the compatibility of the connection flanges against the operating pressure : the PN number of the flanges must be greater or equal to the operating pressure.

The valve is a machined piece of equipment and must not be used to prise apart the flanges. An instruction notice specifying the installation characteristics and the commission of the Sylax 400-1200 is added to every product. It is available on our web site www.socla.com or on request by our sales department.

Installation conditions :

It is recommended that the distances mentioned below be respected in order to prolong the life time of the valve.

Mounting the valve close to pipe work junctions places it in turbulent zones which increase its wear.

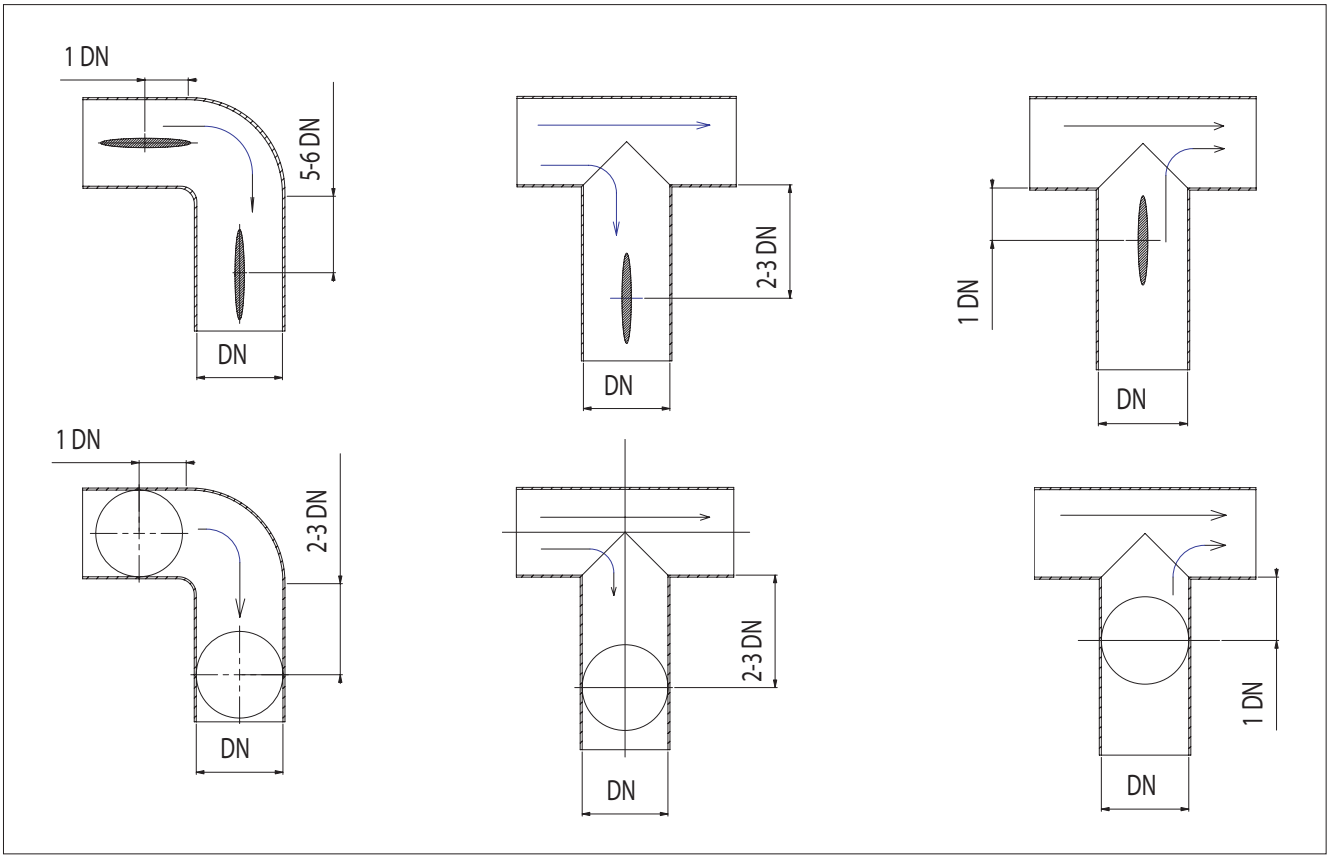

Functionning characteristics

Torque values - EPDM liner for water and lubrificated products.

Torques for Water (Nm)	400	450	500	600	700	800	900	1000	1200
PS 6 bar	400	550	800	1200	2000	2800	4000	5000	7500
PS 16 bar	600	850	1200	2000	3200	5200	6500	7500	8500

NOTE : One actuation minimum per month.

Pressure/temperature diagram :

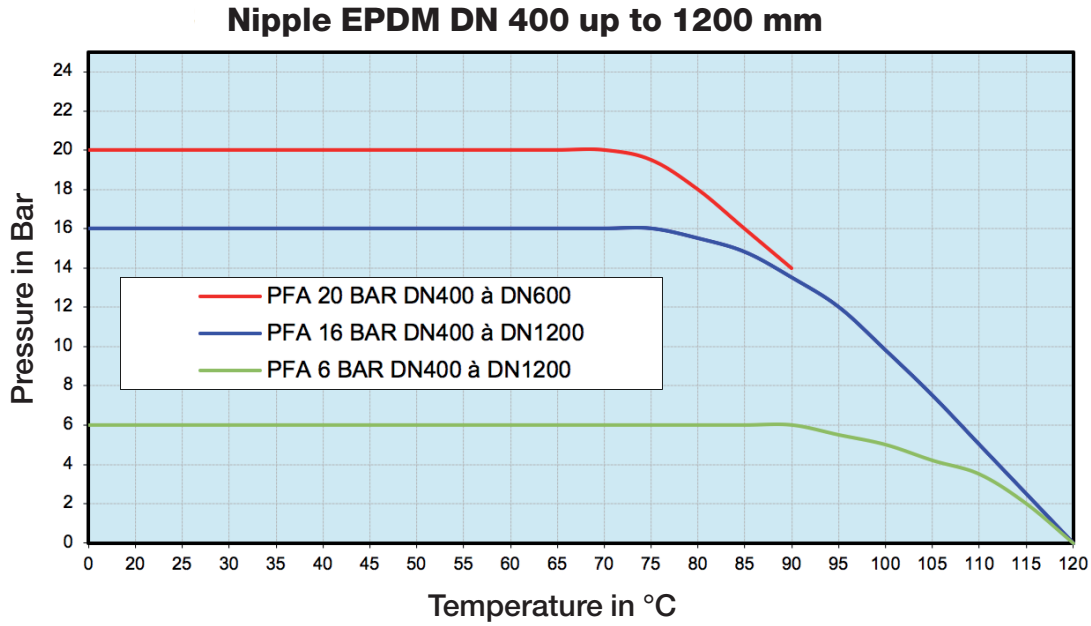

NOTE : For every other elastomer, please ask our sales department.

Flow rate (Kv)

OPENING STAGE - Stainless steel disc									
DN	10°	20°	30°	40°	50°	60°	70°	80°	90°
400	186	670	1395	2660	4420	7000	10000	13560	14695
450	230	868	1826	3340	5656	8634	12278	15575	17000
500	284	1060	2348	4415	7595	11335	14995	20380	20080
600	450	1544	3545	7000	11475	15995	20725	24045	25000
700	700	2450	5483	9900	14994	21150	26540	30700	32990
800	1110	3500	8000	14990	22495	31290	39990	46230	49000
900	1400	4950	12500	23000	34880	46500	57130	61915	63460
1000	1990	7000	17500	32090	46025	60000	70000	77078	77920
1200	2540	9650	24865	46710	69390	88760	101750	108160	109775

Kv = volume of water in m3/h through a valve at a preset opening stage and under a head loss of 1 bar.

The butterfly valve is not the best product for regulating Nevertheless, the Sylax 400-1200 butterfly valve can be used to regulate by an opening stage between 30° and 90°.

A regulation in the opening stage lower than 30° is not advisable because of over speed, cavitation effect, which could damage prematurely the valve.

The maximum flow velocity of the fluid through the valve must not exceed, for fluid liquids :

- 3 m/s for DN 400
- 2,5 m/s for DN 450 to 800
- 2 m/s for DN 1200
- for gas and and pulverulent or paste fluids : please consult us.

Flow rate (Kv)

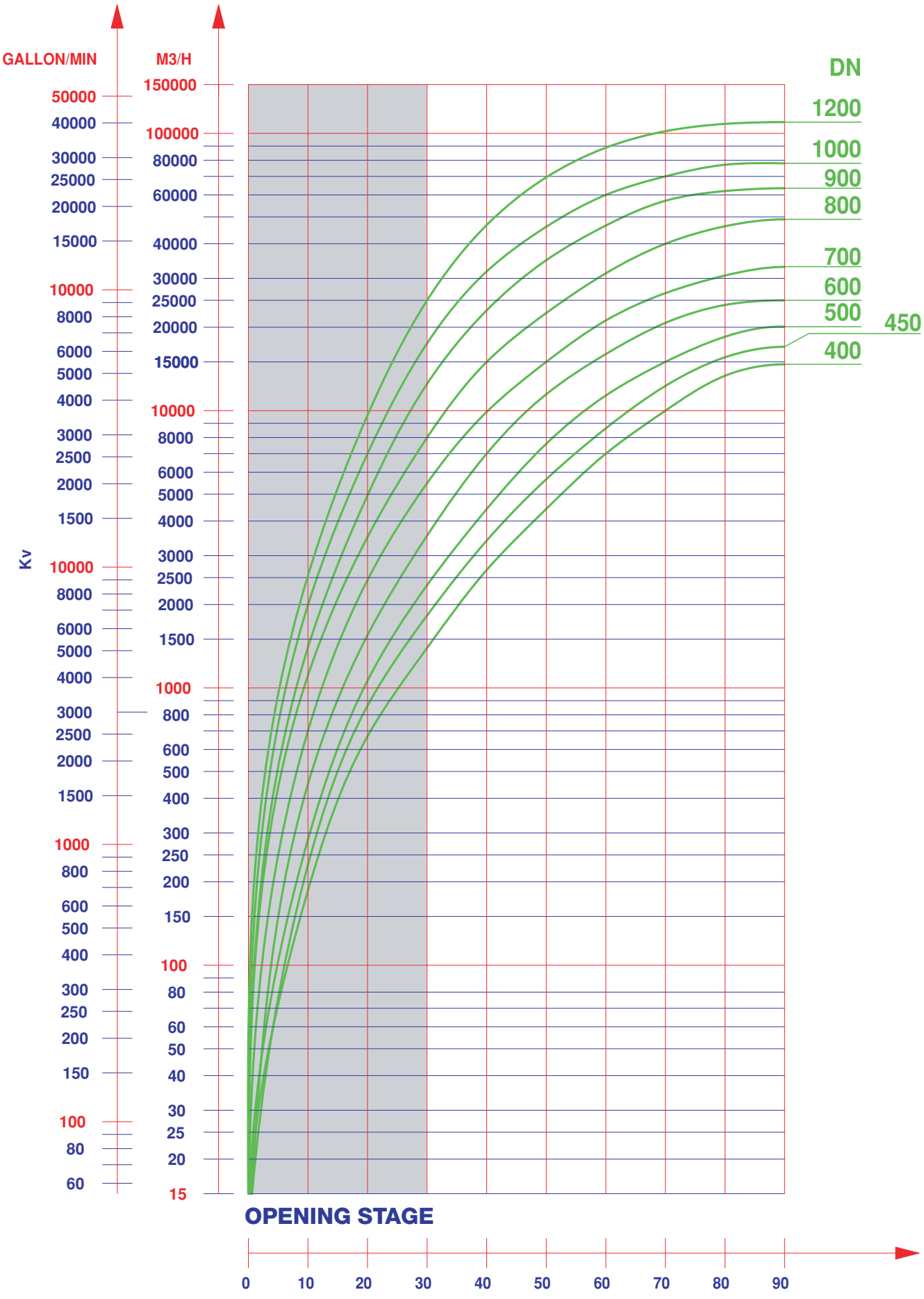
GALLON/MIN
M3/H
Kv
DN
1200
1000
900
800
700
600
500
450
400
OPENING STAGE
0
10
20
30
40
50
60
70
80
90

Head loss diagram (Δp)

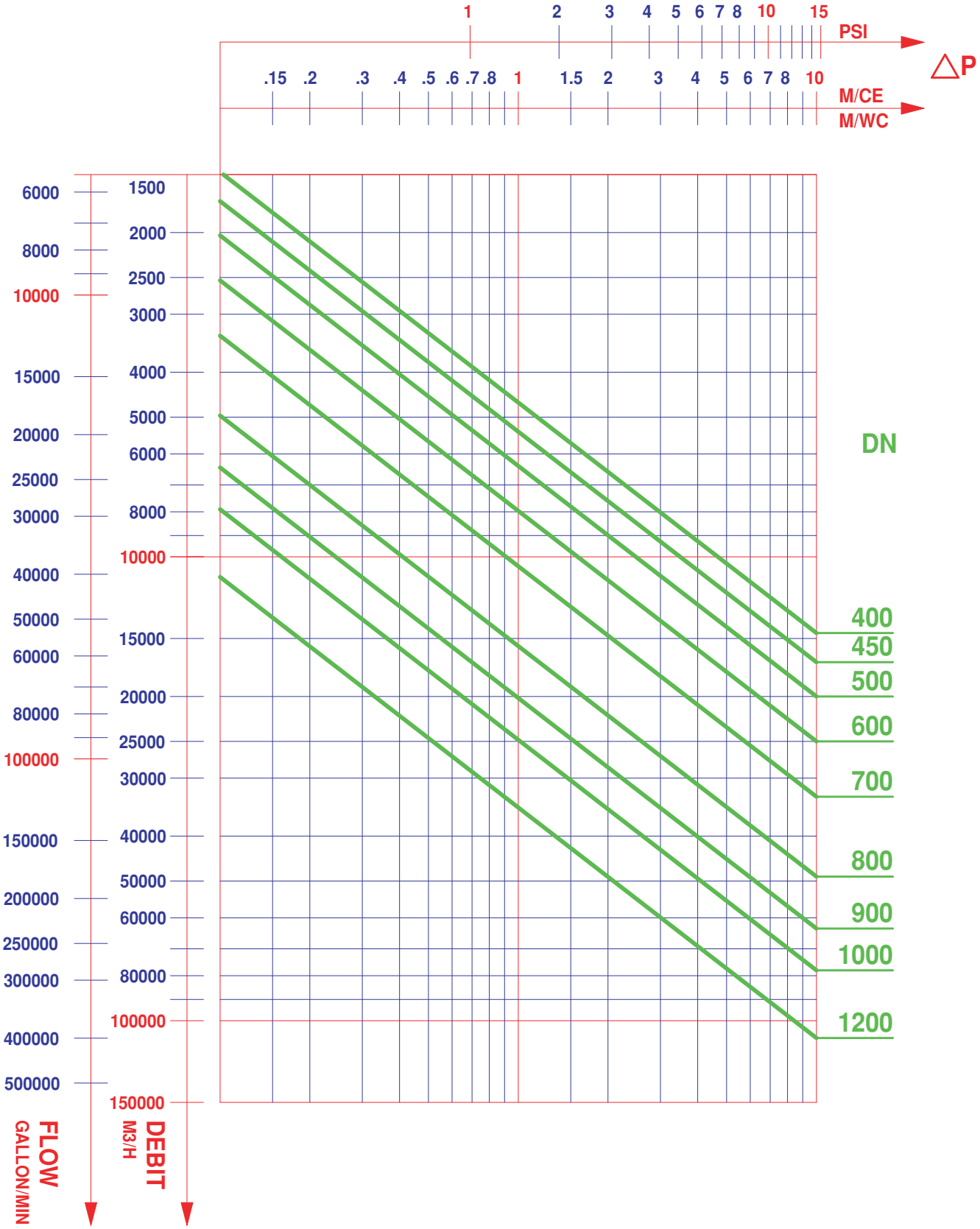

Overall dimensions

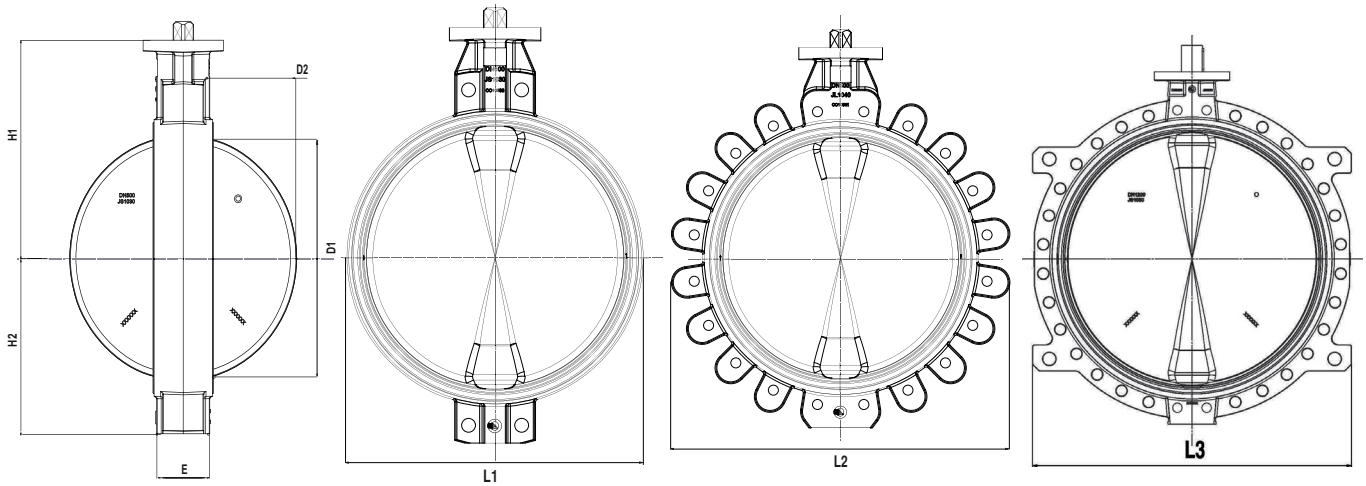

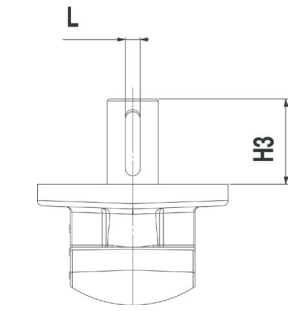

Centering lugs

Diameter		Face to face		Overall dimensions				ISO top according to EN ISO 5211							Square drive outlet DN400/450/500/600/700 round other DN			Travel of the disc		Weight Kg
DN	NPS	E	E'**	L1	H1	H2	H4	N	ØR	ØS	ØT	ØU	J	N	C	H3	L*	D1	D2	
400	16	102	106	470	378	286	24	4	17	140	175	102	5	F14	□36	38		381	146	57
400	**16**	**102**		**470**	**378**	**286**	**24**	**4**	**12,5**	**125**	**175**	**87**	**4**	**F12**	**□27**	**29**		**381**	**146**	**57**
450	**18**	**114**	118	**526**	**417**	**315**	**19**	**4**	**17**	**140**	**175**	**102**	**5**	**F14**	**□36**	**38**		**430**	**166**	**87**
450	18	114		526	417	315	19	4	12,5	125	175	87	4	F12	□27	29		430	166	83
500	**20**	**127**	132	**570**	**440**	**355**	**22**	**4**	**17**	**140**	**175**	**102**	**5**	**F14**	**□36**	**38**		**478**	**184**	**77**
500	20	127		570	440	355	22	4	12,5	125	175	87	4	F12	□27	29		478	184	77
600	**24**	154	160	676-FGS/ 692-FGL	495	415	28	4	22	165	210	132	6	F16	□46	48		575	221	141
									17	**140**	**210**	**102**	**5**	**F14**	**□36**	**38**				
700	**28**	165	173	793	576	460	40	8	18	254	300	202	6	F25	72	110	20	675	265	209
								4	**22**	**165**		**132**		**F16**	**□46**	**56**				
800	**32**	190	193	898	630	520	35	**8**	**18**	**254**	300	202	6	**F25**	**72**	**110**	**20**	772	303	251
								4	22	165				F16	□46	56				
900	**36**	203		1000	700	583	40	8	**22**	**298**	350	232	6	**F30**	**98**	**130**	**28**	872	346	395
									18	254				F25	72	110	20			
1000	**40**	216		1102	752	640	44	8	**22**	**298**	350	232	6	**F30**	**98**	**130**	**28**	971	390	448
									18	254				F25	72	110	20			

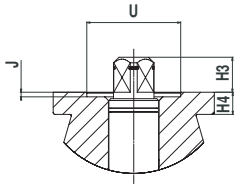

Tapped lugs

Diameter		Face to face		Overall dimensions				ISO top according to EN ISO 5211							Square drive outlet DN 400/450/500/600			Travel of the disc		Weight Kg
DN	NPS	E	E'**	L2	H1	H2	H4	N	ØR	ØS	ØT	ØU	J	N	C	H3	L*	D1	D2	
400	16	102	106	572	378	286	24	4	17	140	175	102	5	F14	□36	38		381	146	78
400	**16**	**102**		**572**	**378**	**286**	**24**	**4**	**12,5**	**125**	**175**	**87**	**4**	**F12**	**□27**	**35**		**381**	**146**	**78**
450	**18**	**114**	118	**638**	**417**	**315**	**19**	**4**	**17**	**140**	**175**	**102**	**5**	**F14**	**□36**	**38**		**430**	**166**	**108**
450	18	114		638	417	315	19	4	12,5	125	175	87	4	F12	□27	35		430	166	108
500	**20**	**127**	132	**708**	**440**	**355**	**22**	**4**	**17**	**140**	**175**	**102**	**5**	**F14**	**□36**	**38**		**478**	**184**	**144**
500	20	127		708	440	355	22	4	12,5	125	175	87	4	F12	□27	35		478	184	144
600	**24**	154	160	831	495	415	28	4	22	165	210	132	6	F16	□46	48		575	221	214
									17	**140**		**102**	**5**	**F14**	**□36**	**38**				

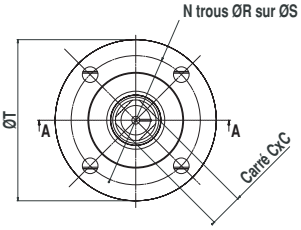

Double flanges

Diameter		Face to face		Overall dimensions				ISO top according to EN ISO 5211							Square drive outlet DN400/450/500/600/700 round other DN			Travel of the disc		Weight Kg
DN	NPS	E	E'**	L2/L3 (1)	H1	H2	H4	N	ØR	ØS	ØT	ØU	J	N	C	H3	L*	D1	D2	
400	16	102	106	582	378	286	24	4	17	140	175	102	5	F14	□36	38		381	146	83
400	**16**	**102**		**582**	**378**	**286**	**24**	**4**	**12,5**	**125**	**175**	**87**	**4**	**F12**	**□27**	**35**		**381**	**146**	**83**
450	**18**	**114**	118	**642**	**417**	**315**	**19**	**4**	**17**	**140**	**175**	**102**	**5**	**F14**	**□36**	**38**		**430**	**166**	**103**
450	18	114		642	417	315	19	4	12,5	125	175	87	4	F12	□27	35		430	166	103
500	**20**	**127**	132	**717**	**440**	**355**	**22**	**4**	**17**	**140**	**175**	**102**	**5**	**F14**	**□36**	**38**		**478**	**184**	**134**
500	20	127		717	440	355	22	4	12,5	125	175	87	4	F12	□27	35		478	184	134
600	**24**	154	160	842	495	415	28	4	22	165	210	132	6	F16	□46	48		575	221	202
									17	**140**		**102**	**5**	**F14**	**□36**	**38**				
700	**28**	165	173	930	576	460	40	8	18	254	300	202	6	F25	72	110	20	675	265	270
								4	**22**	**165**		**132**		**F16**	**□46**	**56**				
800	**32**	190	193	1063	630	520	35	**8**	**18**	**254**	300	202	**6**	**F25**	**72**	**110**	**20**	772	303	320
								4	22	165			6	F16	□46	56				
900	**36**	203		1171	700	583	40	8	**22**	**298**	350	232	6	**F30**	**98**	**130**	**28**	872	346	501
									18	254				F25	72	110	20			
1000	**40**	216		1292	752	640	44	8	**22**	**298**	350	232	6	**F30**	**98**	**130**	**28**	971	390	611
									18	254				F25	72	110	20			
1200	**48**	254	260	1485	870	768	40	8	22	298	350	232	6	F30	98	125	28	1134	454	924

In bold :
standard mounting

E' : compressed Elastomer

* according to norm NFE22-175

** **ATTENTION** Mounting dimensions : Before mounting the butterfly valve, make sure that the distance between the pipe flanges is sufficient enough, so that the liner is not moved from its sealing position on the butterfly valve.

(1) L3 only DN1200

Connecting kits for actuation

We recommend direct mounting of the actuation, otherwise see table below.

DN	NPS	iso top of the valve	Iso top of the actuation													
			F10		F12		F14		F16		F25		F30		F35	
			H1	H2	H1	H2	H1	H2	H1	H2	H1	H2	H1	H2	H1	H2
400	16	F12/□27	468	90	468	90	468	90	478	100	478	100				
450	18	F14/□36	567	150	567	150	567		567	150	567	150				
500	20	F14/□36	590	150	590	150	590	150	590	150	590	150				
600	24	F14/□36	645		645	150	645		645	150	645	150				
700	28	F16/□46			726	150	726	150	726	150	726	220	726	150		
800	32	F25/Ø72					850	220	850	220	850	220	850	220	850	220
900	36	F30/Ø98							920	220	920	220	920		920	220
1000	40	F30/Ø98							972	220	972	220	972	220	972	220
1200	48	F30/Ø98							1090	220	1090	220	1090		1090	220

We recommend direct mounting of the actuation

DN	NPS	Exceeding length of the shaft H3						
		iso top of the valve	Kit	□27	□36	Ø60	Ø72	Ø98
400	16	F12/□27	F10		38			
			F12	29				
			F14					
			F16			80		
			F25				110	
450 - 500 600	18 - 20 24	F14/□36	F10					
			F12	29	38			
			F14		38			
			F16			80		
			F25				110	130
700	28	F16/□46	F12	29	38			
			F14			80		
			F16			80	110	
			F25					130
			F30					
800	32	F25/Ø72	F14		38	80		
			F16				110	
			F25				110	
			F30					130
			F35					
900 1000 1200	36 40 48	F30/Ø98	F16			80	110	
			F25					130
			F30					130
			F35					

N°	N	ØR	ØS
F10	4	10,5	102
F12	4	12,5	125
F14	4	17	140
F16	4	22	165
F25	8	18	254
F30	8	22	298
F35	8	32	356

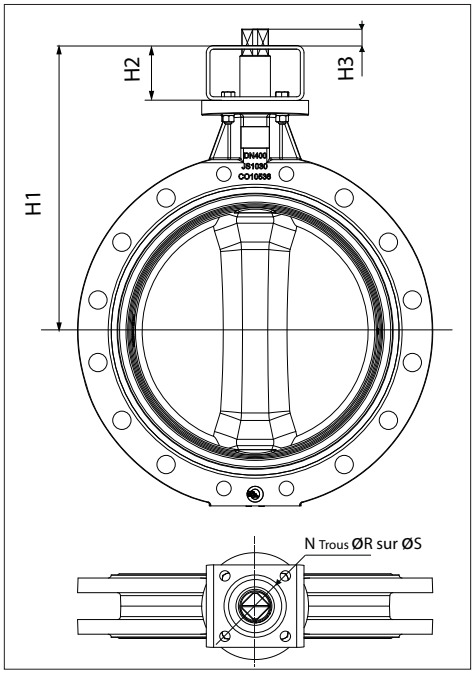

Reminder of the iso top dimensions EN ISO 5211 (see also the overall dimensions).

Other special executions on request subjected to technical feasibility.

Connecting flanges

The Sylax 400-1200 butterfly valve in ductile iron body can be mounted with the following connections (other types on request);

✔ : standard version : see price list
● : specific version : consult us
■ : impossible mounting
■ : connection not specified by the Standard

Centering lugs - CLEARLY indicate the connection at order

DN	NPS	PN6	PN10	PN16	PN25	PN40	ASME/ANSI B16.1 CLASS 125	ASME/ANSI B16.5 CLASS 150	ASME/ANSI B16.47 CLASS 150	BS10		JIS B2238 & JIS B2239			AWWA/ C207 B,D
										Table D	Table E	5K	10K	16K	
400	16	●	✔	✔	●	■	●	●		■	■	●	●	●	●
450	18	●	✔	✔	■	■	●	●		■	●	●	●	■	●
500	20	●	✔	✔	■	■	●	●		■	■	●	●	●	●
600	24	●	✔	✔	●	■	●	●		■	■	●	●	●	●
700	28	●	✔	✔	■				●			●	●	■	●
800	32	●	✔	✔	■				●			●	●	■	●
900	36	●	✔	✔	●		●		●	●	●	●	●	●	●
1000	40	●	✔	✔	■				●			●	●	■	●

Tapped lugs - CLEARLY indicate the connection at order

DN	NPS	PN6	PN10	PN16	PN25	PN40	ASME/ANSI B16.1 CLASS 125	ASME/ANSI B16.5 CLASS 150	ASME/ANSI B16.47 CLASS 150	BS10		JIS B2238 & JIS B2239			AWWA/ C207 B,D
										Table D	Table E	5K	10K	16K	
400	16	●	✔	✔	■	■	●	●		■	■	●	●	●	●
450	18	■	✔	✔	■	■	●	●		■	■	●	●	■	●
500	20	●	✔	✔	■	■	●	●		■	■	●	●	●	●
600	24	●	✔	✔	●	■	●	●		■	■	●	■	■	●

Double flanges - CLEARLY indicate the connection at order

DN	NPS	PN6	PN10	PN16	PN25	PN40	ASME/ANSI B16.1 CLASS 125	ASME/ANSI B16.5 CLASS 150	ASME/ANSI B16.47 CLASS 150	BS10		JIS B2238 & JIS B2239			AWWA/ C207 B,D
										Table D	Table E	5K	10K	16K	
400	16	●	✔	✔	■	■	●	●		■	■	●	●	●	●
450	18	●	✔	✔	■	■	●	●		■	●	●	●	■	●
500	20	●	✔	✔	■	■	●	●		■	■	●	●	●	●
600	24	●	✔	✔	●	■	●	●		■	■	●	●	●	●
700	28	●	✔	✔	■				●			●	●	■	●
800	32	●	✔	✔	■				●			●	●	■	●
900	36	●	✔	✔	●		●		●	●	●	●	●	●	●
1000	40	●	✔	✔	■				●			●	●	■	●
1200	48	●	✔	✔	●		●		●	●	●	●	●	●	●

Note : The references of the valves are different in PN10 & PN16

End of line mounting and downstream removing

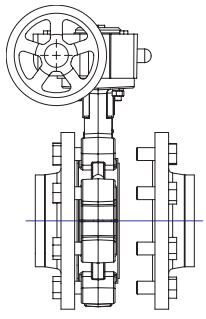

Downstream removing

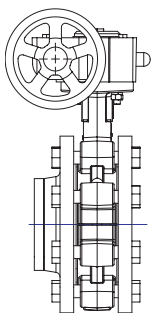

End of line mounting

The end of line mounting and the downstream removing, at ambient temperature, of the Sylax 400-1200 butterfly valve is limited to the pressure mentioned on page 9 according to the PED directive 2014/68/UE

Theses mountings are only possible on tapped lugs and double flanges bodies.

Type of flange

The Sylax 400-1200 butterfly valve has been designed to be mounted on normalised standard flanges. Only standard flanges type 11, 21 and 34 according to EN 1092 are quite compatible. For other types of flanges, refer to the table below. Non appropriate connections will cancel our guarantee.

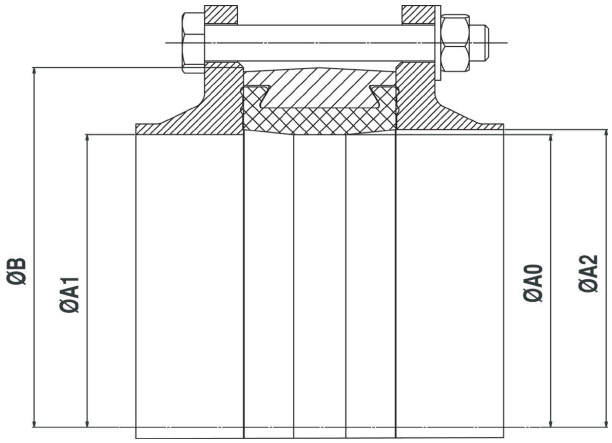

DN	Ø A0	Ø A1 mini	Ø A2 maxi	Ø B mini
400	392	401	417	480
450	442	450	468	536
500	492	498	520	585
600	592	595	620	707
700	690	695	717	813
800	792	792	818	918
900	892	892	920	1020
1000	992	991	1022	1122
1200	1160	1157	1199	1330

NOTE : The use of expansion seals, as well as the use of elastomer coated flanges, between the flange and the valve are strictly forbidden.

Tag and traceability

N°	Description
1	Name of the valve
2	Reference
3	Material of the disc
4	Material of the liner
5	Pressure PS between flanges L1/L2 (liquid)
6	Pressure PS between flanges G1/G2 (gas)
7	Pressure PS end flange L1/L2 (liquid)
8	Pressure PFA water 20°C
9	Pressure PS end flange G2 (gas)
10	Number of manufacturing order
11	Notified Body Number for the Directive PED 2014/68/UE
12	Manufacturing date
13	Connecting flanges
14	Limit of use
15	Approval information zone
16	Marking relating to the Directive ATEX 2014/34/UE

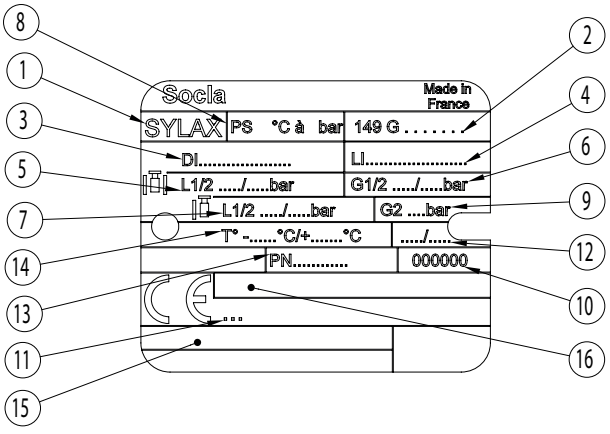

Bolts and nuts

NOTE : Bolts and nuts are not part of our standard supply.

CENTERING LUG TYPE BODY

DN	NPS	a	NF EN 1092 PN10						NF EN 1092 PN16						**ASME/ANSI B16.1 Cl125** up to DN 600 + DN 900 **ASME/ANSI B16.5 Cl150** up to DN 600 **ASME/ANSI B16.47 Cl150** DN 700 - 1000 **AWWA C207 Class D**					
			ØV	Rods*		Screw/face**			ØV	Rods*		Screw/face**			ØV UNC	Rods*		Screw/face**		
				Nb	C	Nb	e	f		Nb	C	Nb	e	f		Nb	C	Nb	e	f
400	16	102	M24	16	29				M27	16	32				1	16	32			
450	18	114	M24	16	29	4	35	4	M27	16	32	4	35	4	1”1/8	12	35	4	50	4
500	20	127	M24	16	29	4	45	4	M30	16	35	4	45	4	1”1/8	16	35	4	45	4
600	24	154	M27	16	32	4	60	4	M33	16	38	4	60	4	1”1/4	16	38	4	60	4
700	28	165	M27	20	32	4	50	4	M33	20	38	4	45	4	1”1/4	24	38	4	45	4
800	32	190	M30	20	35	4	60	4	M36	20	42	4	60	4	1”1/2	24	45	4	50	4
900	36	203	M30	24	35	4	45	4	M36	24	42	4	45	4	1”1/2	28	45	4	45	4
1000	40	216	M33	24	38	4	60	5	M39	24	45	4	60	5	1”1/2	32	45	4	50	5

* Assembly by rods : Number of nuts = 2x Number of rods (below)
**Assembly by bolts : Number of nuts = Number of screws (below)

TAPPED LUG TYPE BODY

DN	NPS	a	NF EN 1092 - PN10				NF EN 1092 - PN16				ASME/ANSI B16.1 Cl. 125/Cl.150			
			ØV	Screw/face**			ØV	Vis par face**			ØV UNC	Screw/face**		
				Nb	e	f		Nb	e	f		Nb	e	f
400	16	102	M24	16	45	4	M27	16	45	4	1	16	45	4
450	18	114	M24	20	35	4	M27	20	35	4	1”1/8	16	50	4
500	20	127	M24	20	45	4	M30	20	45	4	1”1/8	20	45	4
600	24	154	M27	20	60	4	M33	20	60	4	1”1/4	20	60	4

**Assembly by bolts : Number of nuts = Number of screws (below)

DOUBLE FLANGE BODY

DN	NPS	a et a1	d	NF EN 1092 PN10							NF EN 1092 PN16							**ASME/ANSI B16.1 Cl125** up to DN 600 + DN 900 **ASME/ANSI B16.5 Cl150** up to DN 600 **ASME/ANSI B16.47 Cl150** DN 700 - 1200 **AWWA C207 Class D**						
				øV	Nb1*	c	c(1)	f	Shaft crossing		øV	Nb1*	c	c1	f	Shaft crossing		øV UNC	Nb1*	c	c(1)	f	Shaft crossing	
									Nb2**	e						Nb2**	e						Nb2**	e
400	16	102	29	M24	12	29	22	4	4	45	M27	12	32	22	4	4	45	1	12	32	22	4	4	45
450	18	114	31	M24	16	29	22	4	4	35	M27	16	32	24	4	4	35	1”1/8	12	35	24	4	4	35
500	20	127	32	M24	16	29	22	4	4	38	M30	16	35	26	4	4	34	1”1/8	16	35	26	4	4	34
600	24	154	37	M27	16	32		4	4	50	M33	16	38		5	4	55	1”1/4	16	38		4	4	50
700	28	165	42	M27	20	32		4	4	40	M33	20	38		5	4	40	1”1/4	24	38		4	4	40
800	32	190	46	M30	20	35		4	4	50	M36	20	42		5	4	45	1”1/2	24	42		5	4	45
900	36	203	41	M30	24	35		4	4	42	M36	24	42		5	4	42	1”1/2	28	42		5	4	42
1000	40	216	48	M33	24	38		5	4	60	M39	24	45		6	4	55	1”1/2	32	42		5	4	55
1200	48	254	78	M36	28	42		5	4	70	M45	28	10		7	4	60	1”1/2	40	40		5	4	60

* Assembly by rods between flanges : Number of nuts = 2x Number of rods (below)
** Number of screw/face end flange mounting = Nb1+Nb2, Number of nuts/face = Nb1
For c1, use nuts Hm (thin nuts).

For any other connecting flanges, please consult the corresponding norms and use the formula below.

Bolts and nuts

L1 = minimum length of rods
L2 = minimum length under head of screw
L3 = maximum length under head of screw
L4 = minimum length of the threading of the screw

a = width of the butterfly valve
a1 = valve flange thickness
b = thickness of the flange (customer)
c = thickness of washer + thickness of nut + exceeding length of the rod
d = width of the flange of the butterfly valve body
e = maxi depth of screws
f = thickness of washer

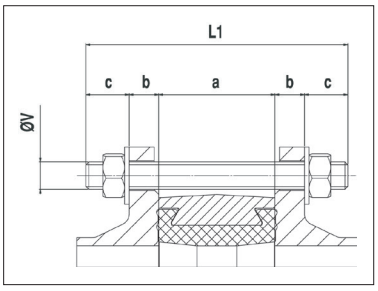

For wafer type body; assembly by rods :

L1 = a + 2(b+c)

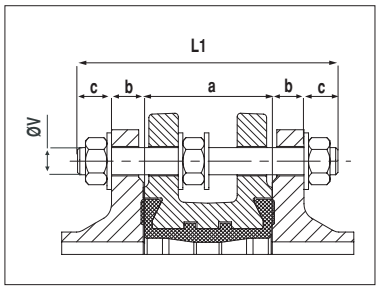

For double flange body, assembly by rods :

L1 = a + 2(b+c)

Mounting in case of downstream pipework dismantling (see page 12).

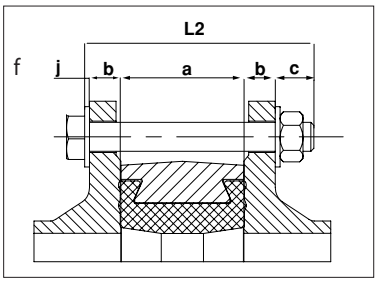

For wafer type body; assembly by bolts :

L2 = a + 2b + c + f

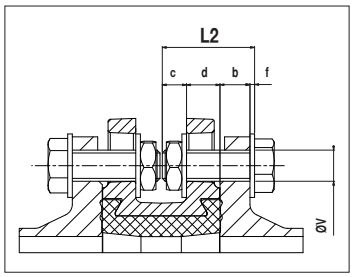

For double flange body, assembly by bolts or end of line mounting :

L2 = b + d + c + f

NOTE : use nuts with reduced face-to-face dimensions

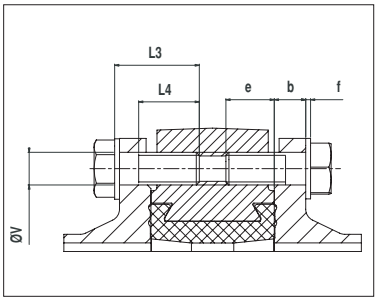

For lug type body; assembly by screws; For wafer type body, mounting shaft crossing DN 450 up to DN 1000:

L3≤b+e+f with **L4≥L3-(b+f)**

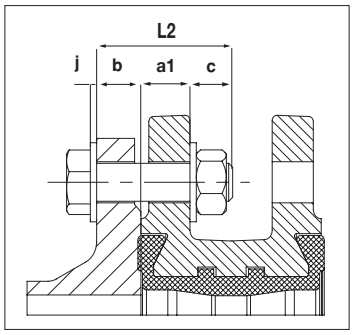

For double flange body, permanent downstream dismantling, assembly by bolts :

L2 = a1 + b + c + f

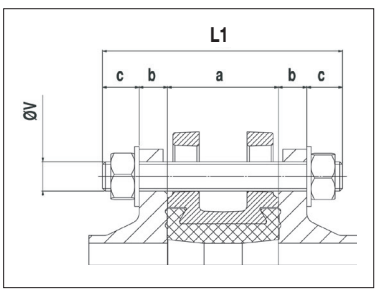

For double flange body, mounting between flanges; assembly by rods :

L1 = a + 2(b+c)

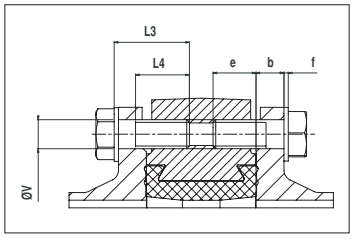

For double flange body, mounting shaft cross-sing :

L3≤b+e+f with **L4≥L3-(b+f)**

Actuations

Find below the different standard assembly combinations.
For any other information, please ask our technical Department.

ASSEMBLY LEVEL 2

1 or 2 mechanical limit switch



Inductive limit switch



Limit switchbox : mechanical or inductive



Positionners* : BAR Positurn 2



*Pneumatic actuator only

For other options, please consult us.

ASSEMBLY LEVEL 1

Manual gearbox



Optional: with chain-wheel

Servovalve

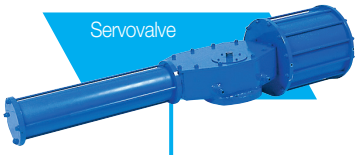

Remote control + emergency steering wheel control



Socla



Socla



Bernard



Auma



GEAR BOX

PNEUMATIC ACTUATOR

ELECTRIC ACTUATOR

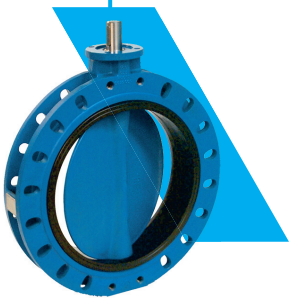

© 2019 Socla