SIEMENS

SITRANS F

Electromagnetic flowmeters SITRANS FMT020

Operating Instructions

7ME6942 (SITRANS FMT020)
7ME6532 (SITRANS FM520)

FLUXER

12/2023

Getting started 1
Introduction 2
Safety notes 3
Description 4
Installing/mounting 5
Connecting 6
Commissioning 7
Operating 8
Parameter assignment 9
Service and maintenance 10
Diagnostics and troubleshooting 11
Technical specifications 12
Dimension drawings 13
Product documentation and support A
Communication B
Remote operation C
HMI menu structure D

Legal information

Warning notice system

This manual contains notices you have to observe in order to ensure your personal safety, as well as to prevent damage to property. The notices referring to your personal safety are highlighted in the manual by a safety alert symbol, notices referring only to property damage have no safety alert symbol. These notices shown below are graded according to the degree of danger.

⚠ DANGER

indicates that death or severe personal injury **will** result if proper precautions are not taken.

⚠ WARNING

indicates that death or severe personal injury **may** result if proper precautions are not taken.

⚠ CAUTION

indicates that minor personal injury can result if proper precautions are not taken.

NOTICE

indicates that property damage can result if proper precautions are not taken.

If more than one degree of danger is present, the warning notice representing the highest degree of danger will be used. A notice warning of injury to persons with a safety alert symbol may also include a warning relating to property damage.

Qualified Personnel

The product/system described in this documentation may be operated only by **personnel qualified** for the specific task in accordance with the relevant documentation, in particular its warning notices and safety instructions. Qualified personnel are those who, based on their training and experience, are capable of identifying risks and avoiding potential hazards when working with these products/systems.

Proper use of Siemens products

Note the following:

⚠ WARNING

Siemens products may only be used for the applications described in the catalog and in the relevant technical documentation. If products and components from other manufacturers are used, these must be recommended or approved by Siemens. Proper transport, storage, installation, assembly, commissioning, operation and maintenance are required to ensure that the products operate safely and without any problems. The permissible ambient conditions must be complied with. The information in the relevant documentation must be observed.

Trademarks

All names identified by ® are registered trademarks of Siemens Aktiengesellschaft. The remaining trademarks in this publication may be trademarks whose use by third parties for their own purposes could violate the rights of the owner.

Disclaimer of Liability

We have reviewed the contents of this publication to ensure consistency with the hardware and software described. Since variance cannot be precluded entirely, we cannot guarantee full consistency. However, the information in this publication is reviewed regularly and any necessary corrections are included in subsequent editions.

Siemens Aktiengesellschaft
Digital Industries
Postfach 48 48
90026 NÜRNBERG
GERMANY

Document order number: A5E51539946
Ⓟ 01/2024 Subject to change

Copyright © Siemens 2023.
All rights reserved

Table of contents

1 Getting started 9

2 Introduction 11

2.1 Purpose of this documentation 11

2.2 Document history 11

2.3 FW revision history 11

2.4 Product compatibility 11

2.5 Designated use 12

2.6 Checking the consignment 12

2.7 Items supplied 12

2.8 Industrial use note 13

2.9 Cybersecurity information 13

2.10 Transportation and storage 14

2.11 Notes on warranty 14

3 Safety notes 15

3.1 Preconditions for use 15

3.1.1 Warning symbols on the device 15

3.1.2 Laws and directives 16

3.1.3 Conformity with European directives 16

3.1.4 Improper device modifications 17

3.2 Requirements for special applications 17

3.3 Environmental & safety conditions according to IEC 61010-1 17

4 Description 19

4.1 Overview 19

4.2 Design 19

4.3 Features 19

4.4 Applications 20

4.5 Principle of operation 20

4.6 Nameplate layout 21

4.7 Certification symbols 21

5 Installing/mounting 23

5.1 Basic safety notes 23

5.1.1 Installation location requirements 23

5.1.2 Proper mounting 24

5.1.2.1 Incorrect mounting ... 24
5.2 Disassembly ... 25
5.3 Introduction ... 25
5.4 Installation conditions ... 26
5.5 Installing the transmitter in remote design ... 27
5.6 Turning the transmitter or local display ... 29
5.7 Installing the communication module ... 34
5.8 Installing the memory card ... 37
6 Connecting ... 39
6.1 Basic safety notes ... 39
6.2 Connecting the transmitter in compact design ... 40
6.3 Connecting the transmitter in remote design ... 45
6.3.1 Connecting the sensor ... 45
6.3.2 Connecting the transmitter ... 49
6.4 Electrical connection ... 52
6.5 Connecting the communication cable ... 57
7 Commissioning ... 59
7.1 Basic safety notes ... 59
7.2 Local display ... 59
7.3 Access control ... 60
7.4 Device startup ... 61
7.5 Wizards ... 62
7.6 Web server ... 63
7.6.1 Establishing a connection to the web server ... 63
7.6.2 Functions of the web server ... 65
8 Operating ... 67
8.1 Operating the device on the local display ... 67
8.1.1 Display views ... 67
8.1.2 Fixed display texts ... 69
8.1.3 Reading the process values ... 69
8.1.4 Handling alarms and diagnostics ... 71
8.1.5 Operating the totalizers ... 72
8.2 Parameter view ... 73
8.3 Reading/changing parameters ... 74
8.3.1 Alphanumeric parameters ... 74
8.3.2 Parameter list read only view ... 75
9 Parameter assignment ... 79
9.1 Menu structure ... 79
9.2 Parameter explanations ... 80

9.2.1 Process values ... 80
9.2.2 Low flow cut-off ... 82
9.2.3 Insulation test ... 82
9.2.4 Measurement linearization ... 83
9.2.4.1 Measurement linearization ... 83
9.2.4.2 Setting one point adjustment ... 83
9.2.4.3 Setting two point adjustment ... 84

9.3 Inputs and outputs ... 85
9.3.1 Current output ... 86
9.3.1.1 Current output ... 86
9.3.1.2 Positive normal scaling ... 88
9.3.1.3 Positive across zero ... 89
9.3.1.4 Bidirectional across zero ... 90
9.3.1.5 Bidirectional symmetrical ... 91
9.3.2 Pulse output ... 91
9.3.2.1 Pulse repetition ... 92
9.3.2.2 Examples pulse output ... 92
9.3.3 Frequency output ... 92
9.3.3.1 Frequency calculation ... 92
9.3.3.2 Example frequency output ... 93
9.3.4 Status output ... 93
9.3.4.1 Alarm status ... 93

10 Service and maintenance ... 95

10.1 Basic safety notes ... 95
10.1.1 Maintenance ... 95

10.2 Cleaning ... 95

10.3 Maintenance and repair work ... 95
10.3.1 Replacing the memory card ... 97
10.3.2 Performing a firmware update ... 99

10.4 Ordering of spare parts ... 100

10.5 Replacing the device ... 101

10.6 Return procedure ... 101

10.7 Disposal ... 102

11 Diagnostics and troubleshooting ... 103

11.1 Device status symbols (Graphical display) ... 103

11.2 Device status symbols (chart) ... 103

11.3 Device information symbols (chart) ... 105

11.4 Diagnostics and corrective actions ... 106

12 Technical specifications ... 119

12.1 Technical specifications ... 119

12.2 Certificates and approvals ... 120

12.3 Power ... 120

12.4 Outputs ... 121

12.5 Operating conditions ... 121

13 Dimension drawings ... 123

13.1 Transmitter dimensions ... 123

A Product documentation and support ... 125

A.1 Product documentation ... 125

A.2 Technical support ... 126

B Communication ... 127

B.1 HART ... 127
B.1.1 Mode of operation HART function ... 127
B.1.2 System integration ... 128
B.1.3 Universal commands ... 129
B.1.4 Common practice commands ... 130

B.2 PROFINET ... 130
B.2.1 PROFINET communication ... 131
B.2.2 Device information ... 131
B.2.3 PROFINET device setup ... 131
B.2.4 Startup parameters ... 133
B.2.5 Cyclic communication ... 134
B.2.5.1 Cyclic communication ... 134
B.2.5.2 Status byte ... 135
B.2.6 Diagnostics ... 135
B.2.7 Physical block - Access control_4WTP ... 136
B.2.8 Address conflict detection (ACD) ... 137

B.3 Modbus ... 137
B.3.1 Modbus addressing model ... 137
B.3.2 Modbus function codes ... 137
B.3.3 Changing Modbus communication settings ... 142
B.3.4 Modbus communication ... 143
B.3.5 Process data ... 144
B.3.6 Coil configuration ... 144
B.3.7 Modbus register mapping ... 146
B.3.8 Integer byte order ... 147
B.3.9 Float byte order ... 148
B.3.10 Modbus function codes ... 148
B.3.11 Access control ... 149

B.4 EtherNet/IP ... 150
B.4.1 Startup parameters ... 151
B.4.2 Data for cyclic communication/implicit messaging ... 152
B.4.2.1 Input assembly ... 152
B.4.2.2 Output assembly ... 153
B.4.3 Address conflict detection (ACD) ... 153

C Remote operation ... 155

C.1 SIMATIC PDM ... 155
C.1.1 Overview SIMATIC PDM ... 155
C.1.2 Check SIMATIC PDM version ... 155
C.1.3 Deactivate buffers when connecting via serial modem ... 156

C.1.4 Updating the Electronic Device Description (EDD) or Field Device Integration (FDI) 157
D HMI menu structure 159
D.1 HMI menu structure 159
Index 161

Getting started

1

Condition

You have read the following safety instructions:

- General safety information (Page 15)
- Basic safety information: Installing/mounting (Page 23)
- Basic safety information: Connecting (Page 39)
- Basic safety information: Commissioning (Page 59)

Read the entire document in order to achieve the optimum performance of the device.

Procedure

1. For remote installations install the wall mounting unit.
   Installing the transmitter in remote design (Page 27)
2. Connect the transmitter to the sensor in either compact or remote design.
   Connecting the transmitter in compact design (Page 40)
   Connecting the transmitter in remote design (Page 45)
3. Optionally install a communication module.
   Installing the communication module (Page 34)
   Connecting the communication cable (Page 57)
4. For compact installations optionally turn the transmitter or the display.
   Turning the transmitter or local display (Page 29)
5. Power up the device.
   Device startup (Page 61)
6. Run the "Quick commissioning wizard".
   Wizards (Page 62)
7. Set further parameters on the local display or remotely.
   Establishing a connection to the web server (Page 63)
   Operating the device on the local display (Page 67)
   SIMATIC PDM (Page 155)

See also

Electrical connection (Page 52)

Introduction 2

2.1 Purpose of this documentation

These instructions contain all information required to commission and use the device. Read the instructions carefully prior to installation and commissioning. In order to use the device correctly, first review its principle of operation.

The instructions are aimed at persons mechanically installing, connecting and commissioning the device, as well as service and maintenance engineers.

See also

Technical support (Page 126)

2.2 Document history

The following table shows major changes in the documentation compared to the previous edition.

Edition	Remark
12/2023	Parameter assignment chapter, Mobus communication appendix added
05/2023	First edition

2.3 FW revision history

Firmware revision	Date	Changes
1.01.05-00	July 26, 2023	• Initial release

2.4 Product compatibility

The following table describes compatibility between manual edition, device revision, engineering system and associated Electronic Device Description (EDD).

Manual edition	Remarks	Device revision	Compatible version of device integration package	
12/2023 05/2023	Sales release First edition	FW: 1.01.05-00 or later HW: 1.00.00 or later Device revision 1 or later	SIMATIC PDM V9.2 SP1	EDD: 1.00.00 or later
			AMS Device Manager V14.0	
			SITRANS DTM V4.3	
			AMS Trex Device Communicator	

2.5 Designated use

Use the device in accordance with the information on the nameplate and in the Technical specifications (Page 119).

2.6 Checking the consignment

1. Check the packaging and the delivered items for visible damages.
2. Report any claims for damages immediately to the shipping company.
3. Retain damaged parts for clarification.
4. Check the scope of delivery by comparing your order to the shipping documents for correctness and completeness.

⚠ WARNING

Using a damaged or incomplete device

Risk of explosion in hazardous areas.

- Do not use damaged or incomplete devices.

2.7 Items supplied

- SITRANS FMT020
- Connection board

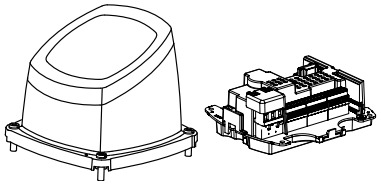

- Siemens Process Instrumentation documentation disk containing certificates, and manuals



Note

Scope of delivery may vary, depending on version and add-ons. Make sure the scope of delivery and the information on the nameplate correspond to your order and the delivery note.

2.8 Industrial use note

NOTICE
Use in a domestic environment This Class A Group 1 equipment is intended for use in industrial areas. In a domestic environment this device may cause radio interference.

2.9 Cybersecurity information

Siemens provides products and solutions with industrial cybersecurity functions that support the secure operation of plants, systems, machines and networks.

In order to protect plants, systems, machines and networks against cyber threats, it is necessary to implement – and continuously maintain – a holistic, state-of-the-art industrial cybersecurity concept. Siemens' products and solutions constitute one element of such a concept.

Customers are responsible for preventing unauthorized access to their plants, systems, machines and networks. Such systems, machines and components should only be connected to an enterprise network or the internet if and to the extent such a connection is necessary and only when appropriate security measures (e.g. firewalls and/or network segmentation) are in place.

For additional information on industrial cybersecurity measures that may be implemented, please visit
https://www.siemens.com/cybersecurity-industry.

Siemens' products and solutions undergo continuous development to make them more secure. Siemens strongly recommends that product updates are applied as soon as they are available and that the latest product versions are used. Use of product versions that are no longer supported, and failure to apply the latest updates may increase customer's exposure to cyber threats.

To stay informed about product updates, subscribe to the Siemens Industrial Cybersecurity RSS Feed under
https://new.siemens.com/cert.

NOTICE
Unauthorized product information or software Use only authorized Siemens websites when accessing any product information or software, including firmware updates, device integration files (EDD, for example), as well as other product documentation. Using unauthorized product information or software could result in a security incident, such as breach of confidentiality, or loss of integrity and availability of the system. For more information, see Product documentation and support (Page 125).

2.10 Transportation and storage

To guarantee sufficient protection during transport and storage, observe the following:

- Keep the original packaging for subsequent transportation.
- Devices/replacement parts should be returned in their original packaging.
- If the original packaging is no longer available, ensure that all shipments are properly packaged to provide sufficient protection during transport. Siemens cannot assume liability for any costs associated with transportation damages.

NOTICE
Insufficient protection during storage The packaging only provides limited protection against moisture and infiltration. • Provide additional packaging as necessary.

Special conditions for storage and transportation of the device are listed in Return procedure (Page 101).

2.11 Notes on warranty

The contents of this manual shall not become part of or modify any prior or existing agreement, commitment or legal relationship. The sales contract contains all obligations on the part of Siemens as well as the complete and solely applicable warranty conditions. Any statements regarding device versions described in the manual do not create new warranties or modify the existing warranty.

The content reflects the technical status at the time of publishing. Siemens reserves the right to make technical changes in the course of further development.

Safety notes

3

3.1 Preconditions for use

This device left the factory in good working condition. In order to maintain this status and to ensure safe operation of the device, observe these instructions and all the specifications relevant to safety.

Observe the information and symbols on the device. Do not remove any information or symbols from the device. Always keep the information and symbols in a completely legible state.

3.1.1 Warning symbols on the device

Symbol	Explanation
	Consult operating instructions
	Hot surface
	Dangerous electrical voltage
	Isolate the device from power using a circuit-breaker
	Protect the device from impact otherwise loss of degree of protection
	Protective insulation; device in protection class II
	Equipment suitable for direct current
	Equipment suitable for alternating current
	Dispose of in an environmentally safe manner, and according to local regulations.

3.1.2 Laws and directives

Observe the safety rules, provisions and laws applicable in your country during connection, assembly and operation. These include, for example:

- National Electrical Code (NEC - NFPA 70) (USA)
- Canadian Electrical Code (CEC Part I) (Canada)

Further provisions for hazardous area applications are for example:

- IEC 60079-14 (international)
- EN 60079-14 (EU and UK)

3.1.3 Conformity with European directives

The product described in this document is in conformity with the relevant harmonization legislation, and its amendments, of the European Union.

Electromagnetic compatibility directive EMC 2014/30/EU	Directive of the European Parliament and of the Council on the harmonisation of the laws of the Member States relating to electromagnetic compatibility
Low voltage directive LVD 2014/35/EU	Directive of the European Parliament and of the Council on the harmonisation of the laws of the Member States relating to the making available on the market of electrical equipment designed for use within certain voltage limits
Pressure equipment directive PED 2014/68/EU [1]	Directive of the European Parliament and of the Council on the harmonisation of the laws of the Member States relating to the making available on the market of pressure equipment
Restriction of hazardous substances directive RoHS 2011/65/EU	Directive of the European Parliament and the Council on the restriction of the use of certain hazardous substances in electrical and electronic equipment

[1] only with sensor SITRANS FMS500 (system SITRANS FMS520)

The applicable directives can be found in the EU Declaration of Conformity of the specific device.

Conformity with UK regulations

The product described in this document is in conformity with the relevant harmonization legislation, and its amendments, of the United Kingdom. The applicable regulations can be found in the UKCA declaration of conformity of the specific device.

See also

Certificates (http://www.siemens.com/processinstrumentation/certificates)

3.1.4 Improper device modifications

WARNING

Improper device modifications

Risk to personnel, system, and environment can result from modifications to the device, particularly in hazardous areas.

- Only carry out modifications that are described in the instructions for the device. Failure to observe this requirement cancels the manufacturer's warranty and the product approvals. Do not operate the device after unauthorized modifications.

3.2 Requirements for special applications

Due to the large number of possible applications, each detail of the described device versions for each possible scenario during commissioning, operation, maintenance or operation in systems cannot be considered in the instructions. If you need additional information not covered by these instructions, contact your local Siemens office or company representative.

Note

Operation under special ambient conditions

We highly recommend that you contact your Siemens representative or our application department before you operate the device under special ambient conditions as can be encountered in nuclear power plants or when the device is used for research and development purposes.

3.3 Environmental & safety conditions according to IEC 61010-1

- Indoor use
- Altitude up to 2000 m
- Maximum relative humidity 80% for temperatures up to 31 °C (88 °F) decreasing linearly up to 50% relative humidity from 40 °C (104 °F)
- Main supply voltage fluctuations up to -10%/+10% of the nominal voltage see Technical specifications (Page 119)
- Overvoltage category II
- Pollution degree 2

Description

4

4.1 Overview

SITRANS FM electromagnetic flowmeter systems consist of a transmitter and a sensor. The following table lists the available sensors for the FMT020 transmitter.

Transmitter	Sensor type
FMT020	FMS500 Electromagnetic sensor DN 15 to DN 1200 (0.5" to 48")

4.2 Design

Standard version



The standard version is an IP66/67 version for compact or remote installation.

4.3 Features

- Backwards compatible with MAG 5100W
- Fast start-up without zero-point adjustments

- Variety of functions for comprehensive device check, self-diagnosis, and onboard verification
- Verificator compatible - Independently verifies performance of sensor, transmitter, and installation (including cable) without process interruption
- Easy to use HMI display with local four-button programming, menu-driven parameters, and Wizard support for key applications
- Multi-functional outputs for process control, minimum configuration with analog, digital (pulse, frequency, status), and relay output
- SD memory card support for data logging, configuration backup, and firmware update
- Seamless field device integration in host systems

4.4 Applications

The SITRANS FM flowmeters are suitable for measuring the flow of almost all electrically conductive liquids, pastes and slurries.

The main applications can be found in the following sectors:

- Water and waste water
- Chemical and pharmaceutical industries
- Food & beverage industry
- Mining and cements industries
- Pulp and paper industry
- Steel industry
- Power generation; utility and chilled water industry

4.5 Principle of operation

The transmitter reads the primary values from the sensor and calculates derived values. The flow measuring principle is based on Faraday's law of electromagnetic induction. Electromagnetic coils mounted diametrically on the measuring pipe generate a pulsed electromagnetic field. The liquid flowing through this electromagnetic field induces a voltage.

The transmitter converts the sensor signals into appropriate standard signals such as 4 to 20 mA, and also fulfil the task of a power supply unit providing the electromagnetic coils with a constant current.

The transmitter consists of a number of function blocks which convert the sensor voltage into flow readings.

4.6 Nameplate layout

Layout of the nameplate

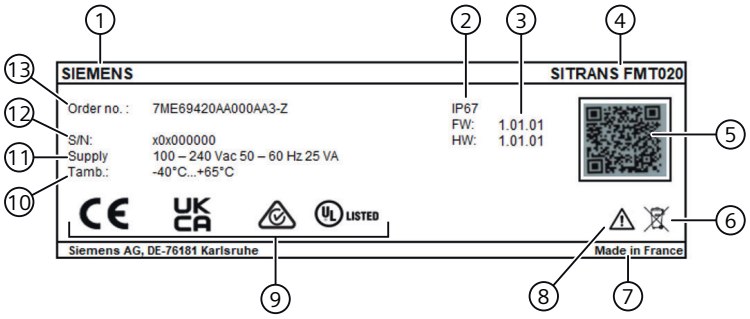

①	Manufacturer	⑧	Consult operating instructions, certificates and approvals
②	Degree of protection	⑨	Conformity with country-specific directives
③	Firmware version and hardware version	⑩	Ambient temperature range
④	Product name	⑪	Power supply
⑤	QR code to website with device-specific product information	⑫	Serial number (S/N)
⑥	WEEE symbol	⑬	Order number
⑦	Place of manufacture		

Figure 4-1 Nameplate layout, example

4.7 Certification symbols

Symbol	Certificate number	Marking
CE		CE marking for EU Declaration of Conformity
UKCA		UKCA marking for UK Declaration of Conformity
cULus	E344532	UL approval

Installing/mounting

5

5.1 Basic safety notes

⚠ CAUTION

Hot surfaces resulting from hot process media

Risk of burns resulting from surface temperatures above 65 °C (149 °F).

- Take appropriate protective measures, for example contact protection.
- Make sure that protective measures do not cause the maximum permissible ambient temperature to be exceeded. Refer to the information in Technical specifications (Page 119).

⚠ CAUTION

External stresses and loads

Damage to device by severe external stresses and loads (e.g. thermal expansion or pipe tension). Process media can be released.

- Prevent severe external stresses and loads from acting on the device.

⚠ CAUTION

Damage from electrostatic discharge (ESD)

Some components in the device (such as communication cards, or memory cards) are sensitive to electrostatic discharge and could be damaged. Be sure to handle such components in a manner that avoids any potential damage due to ESD.

5.1.1 Installation location requirements

⚠ WARNING

Insufficient air supply

The device may overheat if there is an insufficient supply of air.

- Install the device so that there is sufficient air supply in the room.
- Observe the maximum permissible ambient temperature. Refer to the information in the section Operating conditions (Page 121).

NOTICE

Aggressive atmospheres

Damage to device through penetration of aggressive vapors.

- Ensure that the device is suitable for the application.

NOTICE

Direct sunlight

Damage to device.

The device can overheat or materials become brittle due to UV exposure.

- Protect the device from direct sunlight.
- Make sure that the maximum permissible ambient temperature is not exceeded. Refer to the information in Operating conditions (Page 121).

NOTICE

Strong vibrations

Damage to device.

- In installations with strong vibrations, mount the device in a low vibration environment.

5.1.2 Proper mounting

5.1.2.1 Incorrect mounting

NOTICE

Incorrect mounting

The device can be damaged, destroyed, or its functionality impaired through improper mounting.

- Before installing ensure there is no visible damage to the device.
- Make sure that process connectors are clean, and suitable gaskets and glands are used.
- Mount the device using suitable tools.

5.2 Disassembly

⚠ WARNING

Incorrect disassembly

The following risks may result from incorrect disassembly:

- Injury through electric shock

- Risk through emerging media when connected to the process

In order to disassemble correctly, observe the following:

- Before starting work, make sure that you have switched off all physical variables such as pressure, temperature, electricity etc. or that they have a harmless value.
- If the device contains hazardous media, it must be emptied prior to disassembly. Make sure that no environmentally hazardous media are released.
- Secure the remaining connections so that no damage can result if the process is started unintentionally.

5.3 Introduction

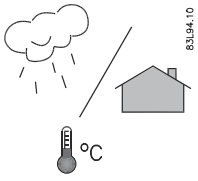

SITRANS F flowmeters are suitable for indoor and outdoor installations.

- Make sure that pressure and temperature specifications indicated on the device nameplate / label will not be exceeded.

5.4 Installation conditions

Reading and operating the flowmeter is possible under almost any installation condition because the display can be oriented in relation to the sensor. Refer to Turning the transmitter or local display (Page 29) for a detailed description.

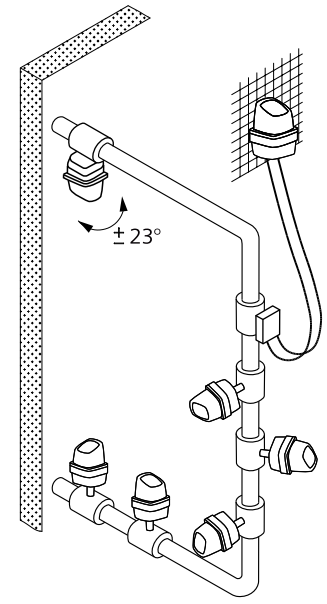

Figure 5-1 Transmitter orientation

To ensure optimum flow measurement, attention should be paid to the following:

Vibrations

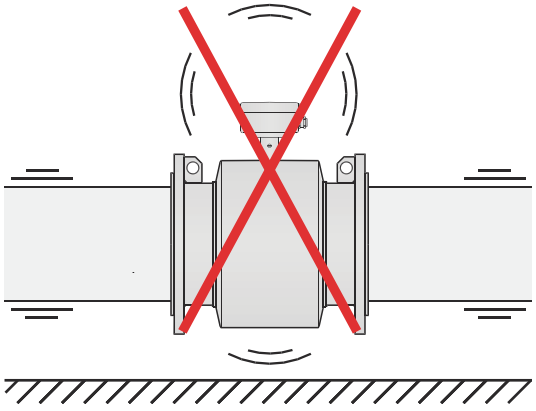

Figure 5-2 Avoid strong vibrations

For installation conditions for sensors, see relevant sensor Operating Instructions.

5.5 Installing the transmitter in remote design

Note

Use screws and washers protruding at max. 9 mm

The maximum space available for screw heads and washers to not interfere with the enclosure is 9 mm, the maximum diameter is M8. Choose screws and washers accordingly.

1. Mount bracket on a wall or on the back of a panel.
   Alternatively mount bracket on a horizontal or vertical pipe using ordinary hose clips or duct straps.

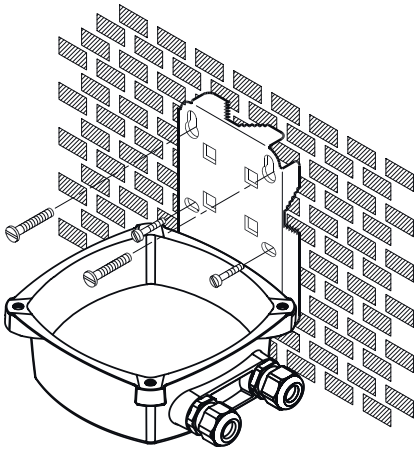

Figure 5-3 Wall mounting

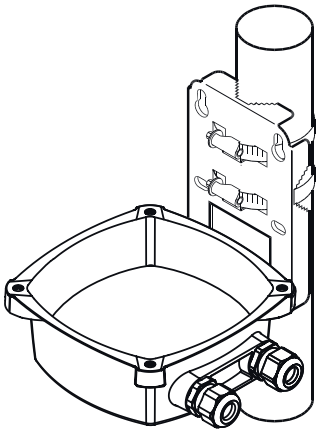

Figure 5-4 Pipe mounting - vertical

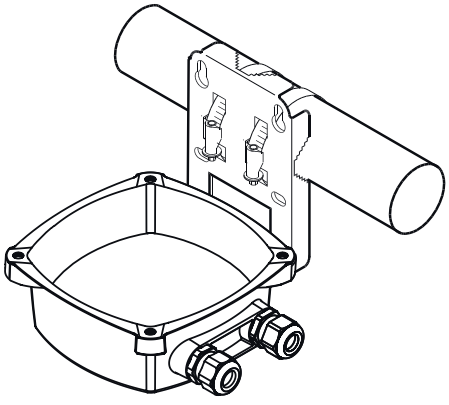

Figure 5-5 Pipe mounting - horizontal

2. Connect the transmitter to the sensor as described in Connecting the transmitter in remote design (Page 45).

See also

Electrical connection (Page 52)

5.6 Turning the transmitter or local display

Before you start

- Read the Safety notes (Page 15)
- Read the Basic safety notes: Installing/mounting (Page 23)
- Read the Basic safety notes: Connecting (Page 39)

Turning the transmitter

1. Isolate the device from power.
2. Unscrew the 4 mounting screws and remove the transmitter

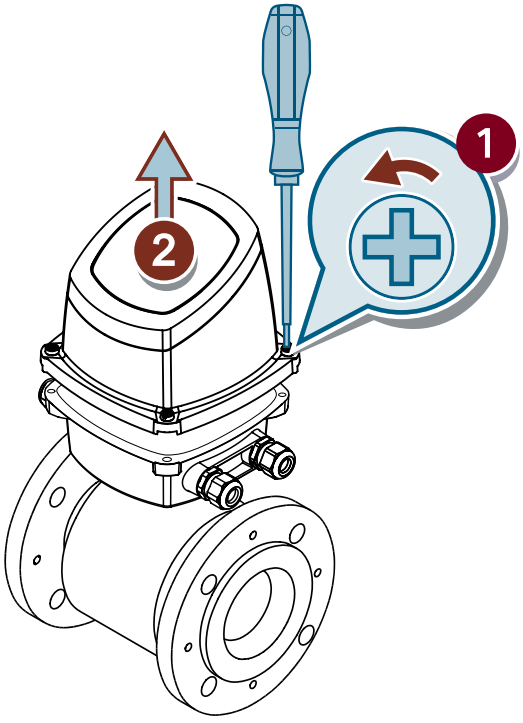

3. Unscrew all cables and remove connection board from terminal box.

4. Unscrew the terminal box mounting screws.

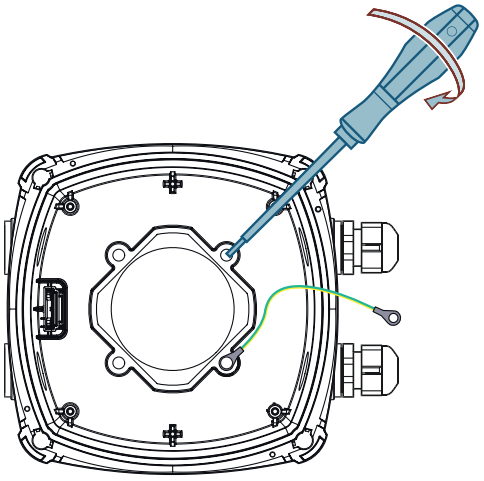

5. Rotate the terminal box and remount it on the pedestal.

Note

Remount grounding wire

Remount the grounding wire lug to one of the terminal box mounting screws.

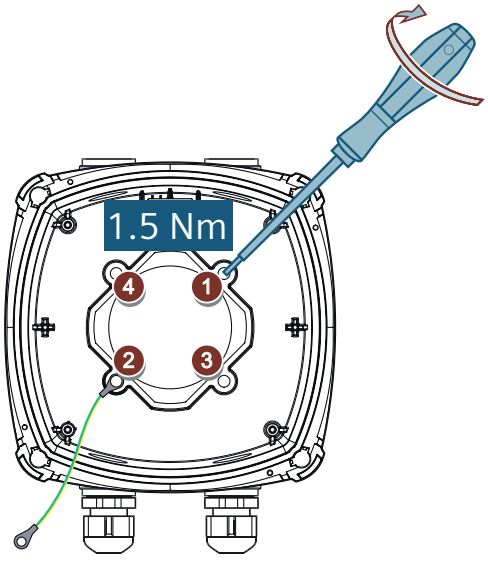

6. Remount the connection board and cables as described in Connecting the transmitter in compact design (Page 40).

7. Mount transmitter on terminal box by cross tightening as indicated. Do not tighten fully at first to avoid damage to the device.

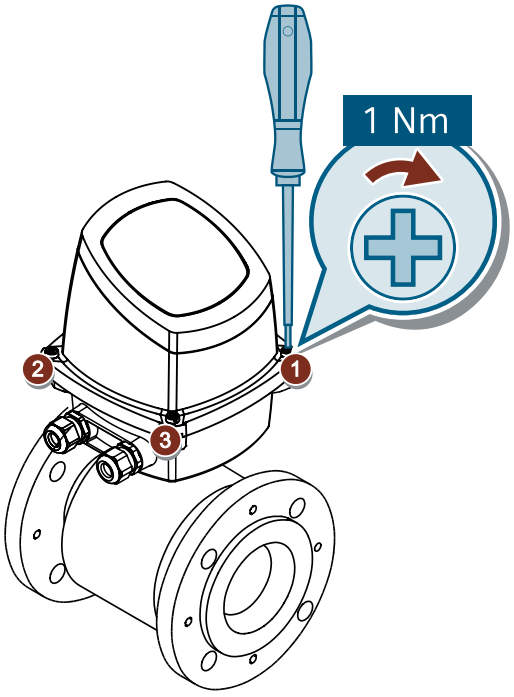

8. Reconnect power to the device.

Rotating the local display

1. Isolate the device from power.
2. Unscrew the 4 mountig screws.

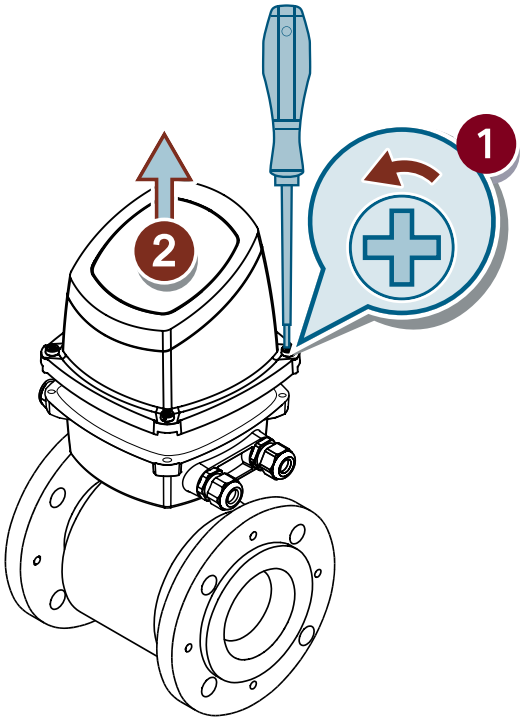

3. Gently push the 4 pins on the bottom side of the transmitter. Lift off the outer case.

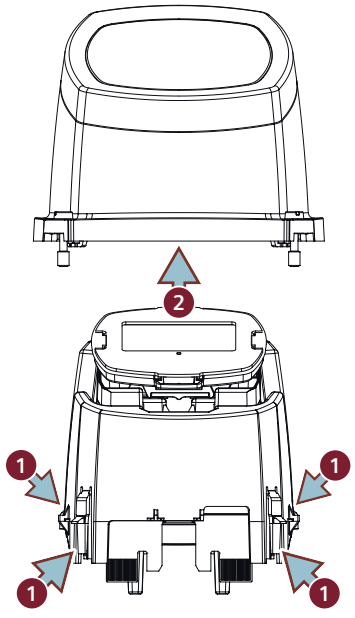

4. Lift off the display and rotate to your desired orientation.

Note

Avoid cable breaking

Do not twist or bend the display cable.

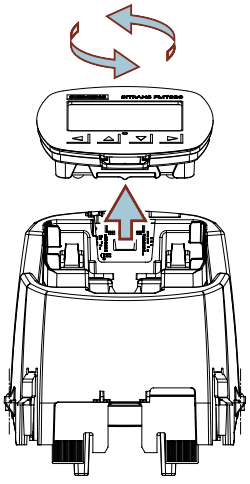

5. Put the transmitter back together in reverse order.

Note

Avoid pins breaking

Make sure that the 4 pins on the bottom side of the transmitter snap back into place and are not under permanent stress.

6. Mount transmitter on terminal box by cross tightening as indicated. Do not tighten fully at first to avoid damage to the device.

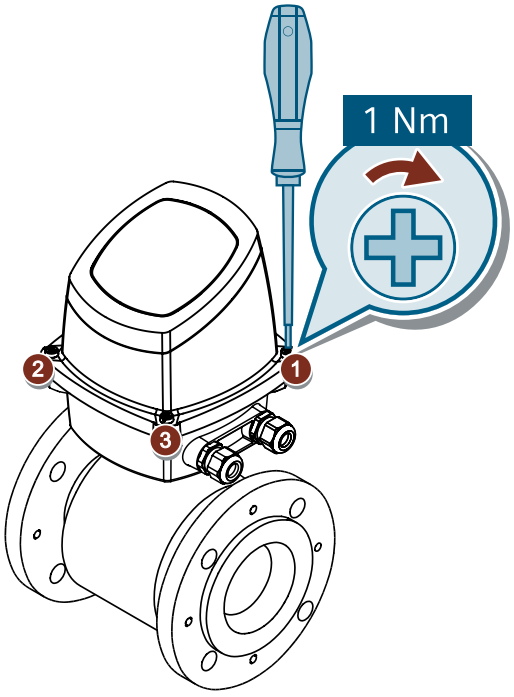

7. Reconnect power to the device.

5.7 Installing the communication module

Before you start

- Read the Safety notes (Page 15)
- Read the Basic safety notes: Installing/mounting (Page 23)
- Read the Basic safety notes: Connecting (Page 39)

Installing the communication module

1. Remove the transmitter.

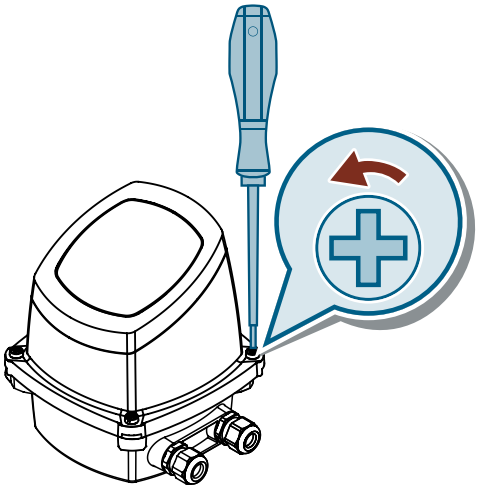

2. At the bottom side of the transmitter, slide in the communication module.

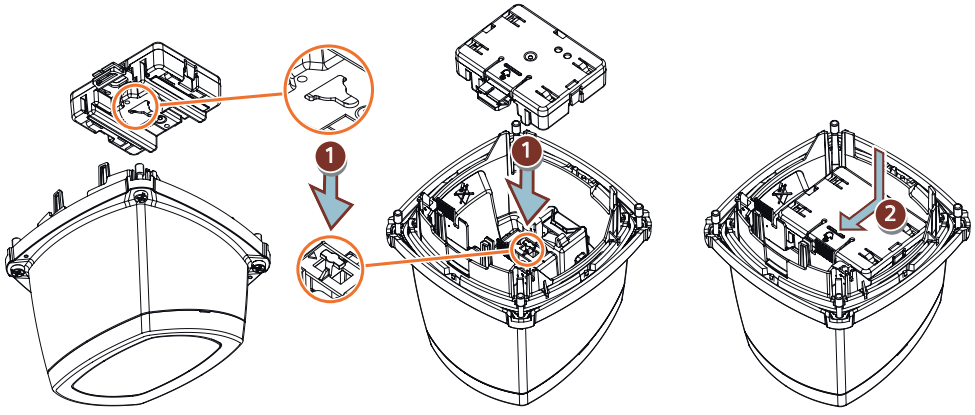

   – To remove the communication module, press down on the module and slide it out.

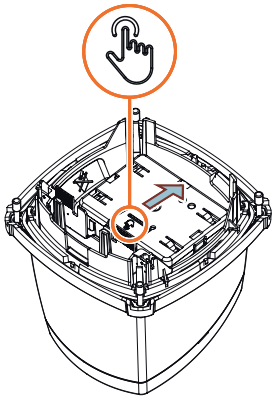

3. Adjust the wiring on the connection board as described in Connecting the communication cable (Page 57).

4. Mount transmitter on terminal box by cross tightening as indicated. Do not tighten fully at first to avoid damage to the device.

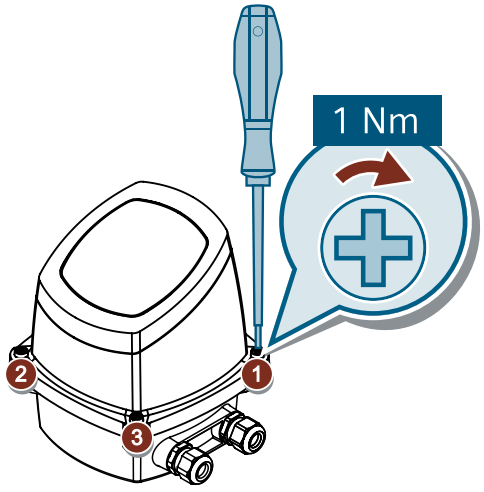

5. Stick the product label of the communication module on the side of the transmitter.

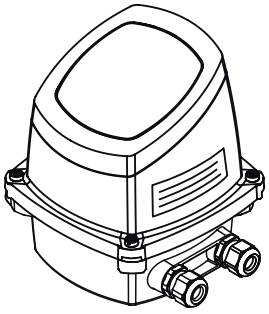

5.8 Installing the memory card

Procedure

1. Isolate the device from power.
2. Unscrew the 4 mounting screws and remove the transmitter.

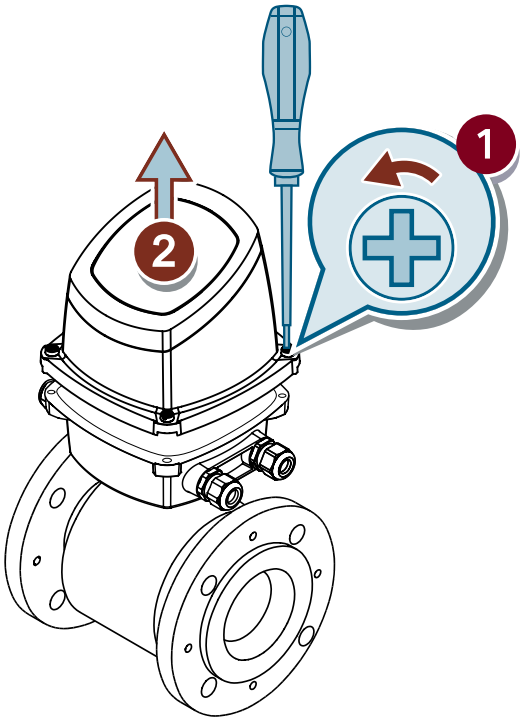

3. Gently push the 4 pins on the bottom side of the transmitter. Lift off the outer case.

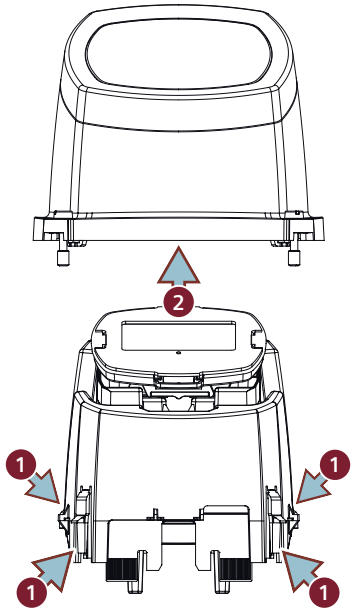

4. Insert the memory card by sliding it into the slot and pressing it down.

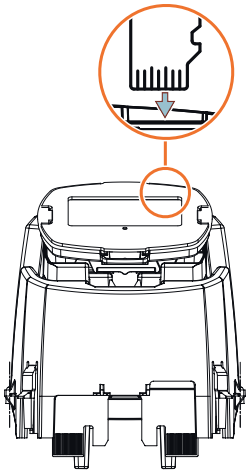

5. Put the transmitter back together in reverse order.

Note

Avoid pins breaking

Make sure that the 4 pins on the bottom side of the transmitter snap back into place and are not under permanent stress.

6. Mount the transmitter on the terminal box by cross tightening as indicated. To avoid damage to the device do not fully tighten right away.

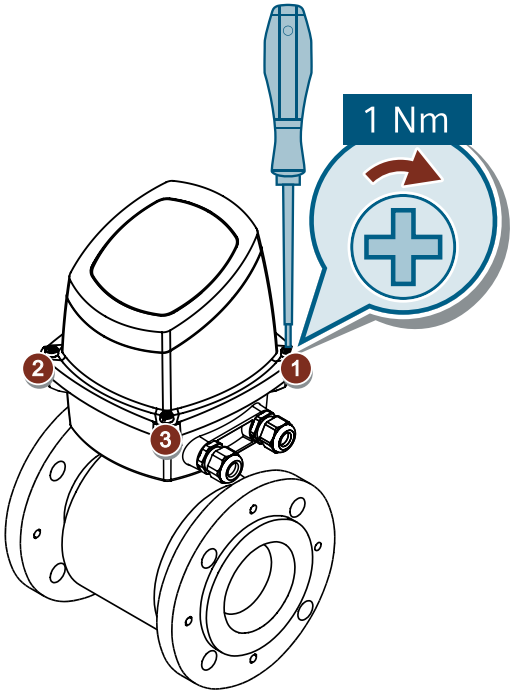

7. Reconnect power to the device.

The parameter "Installed" 3.7.1, will display "Yes" if the memory card is installed properly.

Connecting

6

6.1 Basic safety notes

NOTICE

Only use cable glands and O-rings provided by Siemens for this device

The usage of other cable glands and O-rings voids UL61010-1 certification and can damage the device.

⚠ WARNING

Hazardous contact voltage

Risk of electric shock in case of incorrect connection.

- For the electrical connection specifications, refer to the information in Technical specifications (Page 119).
- At the mounting location of the device observe the applicable directives and laws for installation of electrical power installations with rated voltages below 1000 V.

⚠ WARNING

Missing PE/ground connection

Risk of electric shock.

Depending on the device version, connect the power supply as follows:

- **Power plug**: Ensure that the used socket has a PE/ground conductor connection. Check that the PE/ground conductor connection of the socket and power plug match each other.
- **Connecting terminals**: Connect the terminals according to the terminal connection diagram. First connect the PE/ground conductor.

⚠ WARNING

Improper power supply

Risk of explosion in hazardous areas as result of incorrect power supply.

- Connect the device in accordance with the specified power supply and signal circuits. The relevant specifications can be found in the certificates, in Technical specifications (Page 119) or on the nameplate.

NOTICE
Ambient temperature too high Damage to cable sheath. • At an ambient temperature ≥ 60 °C (140 °F), use heat-resistant cables suitable for an ambient temperature at least 20 °C (36 °F) higher.

NOTICE
Condensation in the device Damage to device through formation of condensation if the temperature difference between transportation or storage and the mounting location exceeds 20 °C (36 °F). • Before taking the device into operation, let the device adapt for several hours in the new environment.

Note

Improvement of interference immunity

- Lay signal cables separate from cables with voltages > 60 V.
- Use cables with twisted wires.
- Keep device and cables at a distance from strong electromagnetic fields.
- Take account of the conditions for communication specified in the Technical specifications (Page 119).
- Use shielded cables to guarantee the full specification according to HART/PA/FF/Modbus/EIA-485/Profibus DP.

6.2 Connecting the transmitter in compact design

Before you start

- Read the Safety notes (Page 15)
- Read the Basic safety notes: Installing/mounting (Page 23)
- Read the Basic safety notes: Connecting (Page 39)

Procedure

1. Remove and discard the terminal box lid of the sensor.

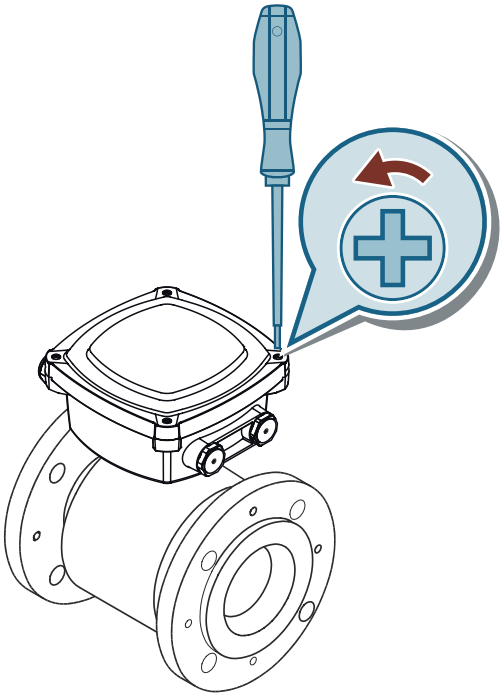

2. Remove SENSORPROM from the holder in the sensor terminal box and plug it on the connection board. Ensure that the serial number on the SENSORPROM label is identical to the sensor serial number.

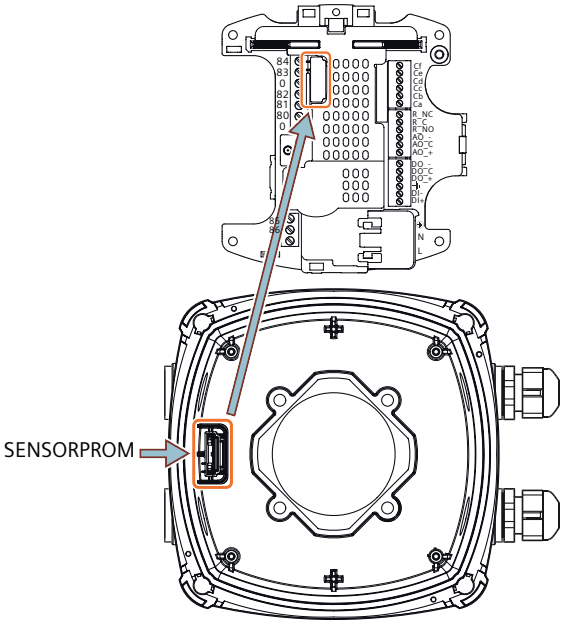

Figure 6-1 SENSORPROM location

3. Fit M20 or ½" NPT cable glands for supply and output cables. For NPT cable glands use the M20 to NPT adapter.

Note

NPT adapter

The NPT adapter is not part of UL 61010-1 approval scope.

4. Connect the grounding cable on the connection board. If the sensor cables are too short, put the connection board inside the terminal box before proceeding.
5. Connect 2-pin connector and 3-pin connector to their corresponding terminal numbers on the connection board.
   - Connect the 3-pin connector to terminals 82, 0, 83.
   - Connect the 2-pin connector to terminals 85 and 86.

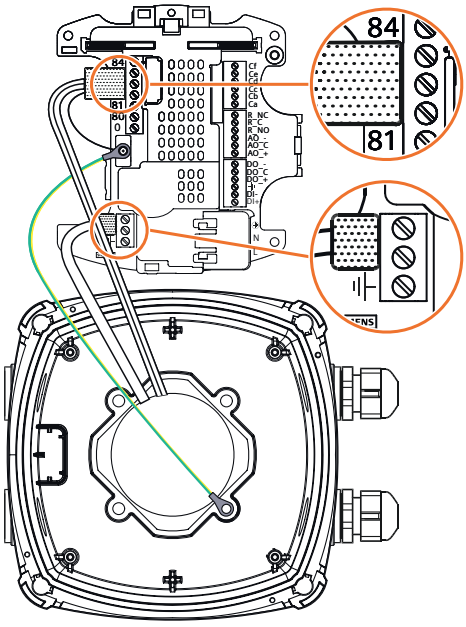

Note

The system can only measure flow if the black plugs are connected to the connection board.

6. Fit power supply and output cable through the cable glands and connect to connection board as shown in Electrical connection (Page 52). Use flexible conduits only.

7. Mount the connection board inside the terminal box with a size 1 cross-tip screwdriver. Tighten completely with maximum torque: 1 Nm.

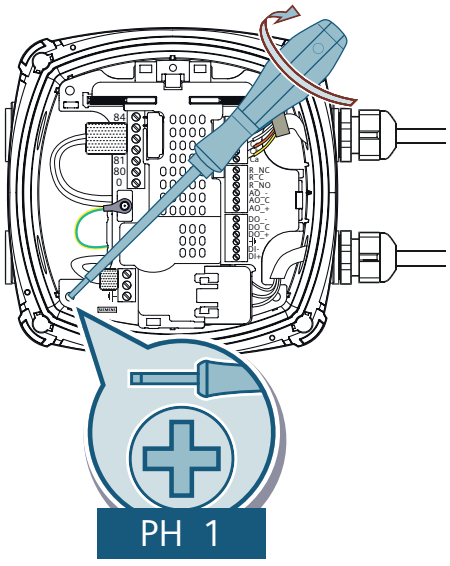

8. Mount the transmitter on the terminal box by cross tightening as indicated. To avoid damage to the device do not fully tighten right away.

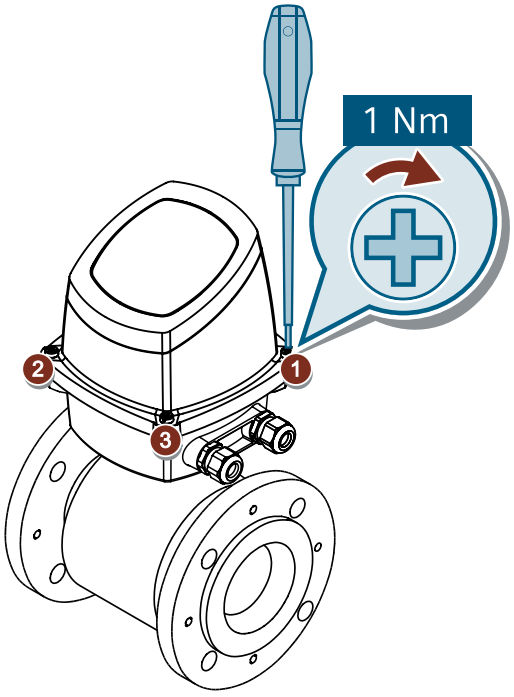

9. To obtain optimum sealing, tighten cable glands.

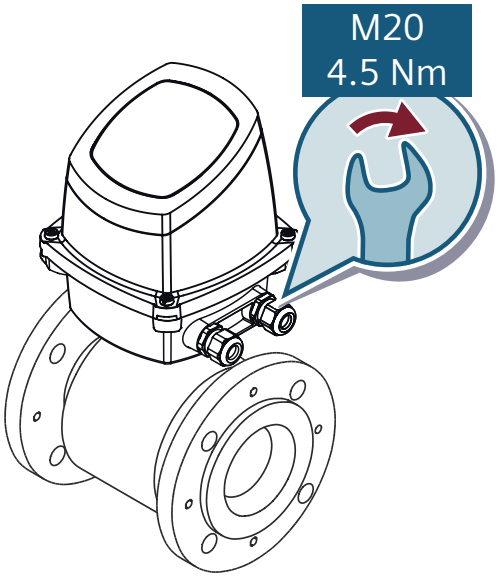

NOTICE
Direct sunlight Direct sunlight can increase the operating temperature above its specified limit, and decrease display visibility. A sun shield is available as accessory.

See also

Connecting the communication cable (Page 57)

6.3 Connecting the transmitter in remote design

6.3.1 Connecting the sensor

Before you start

- Read the Safety notes (Page 15)
- Read the Basic safety notes: Installing/mounting (Page 23)
- Read the Basic safety notes: Connecting (Page 39)

Procedure

1. Remove the lid from the sensor terminal box.

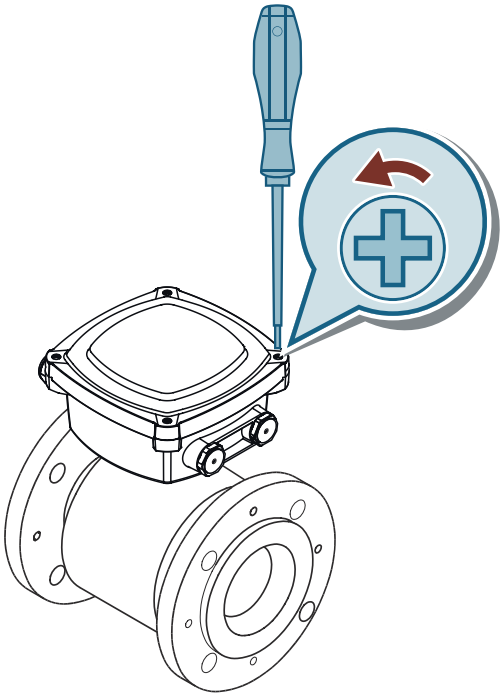

2. Remove SENSORPROM from the holder in the sensor terminal box. The SENSORPROM has to be mounted in the transmitter terminal box.
   Ensure that the serial number on the SENSORPROM label is identical to the sensor serial number.
3. The terminal board with premounted terminal blocks is included in the delivery of the wall mounting unit.
   Mount the sensor terminal board in the sensor terminal box. Tighten completely with maximum torque: 1 Nm.

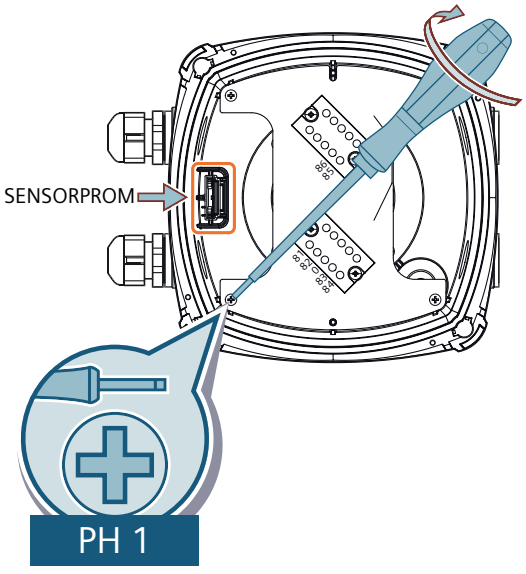

4. Cut off the black wire on the coil cable. Fit coil and electrode cable through the cable glands.
5. Connect coil cable ① and electrode cable ② in the corresponding terminals on the terminal blocks. Tighten all terminal screws with maximum torque: 0.5 Nm.

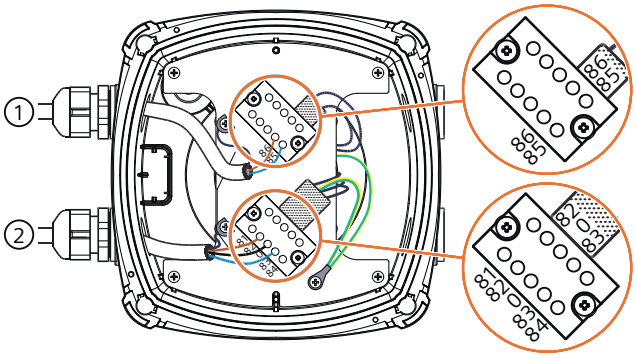

6. Connect the coil and electrode cable shields and grounding cables to the terminal board by using grounding lugs.

7. Remount terminal box lid by cross tightening as indicated. Do not tighten fully at first to avoid damage to the device.

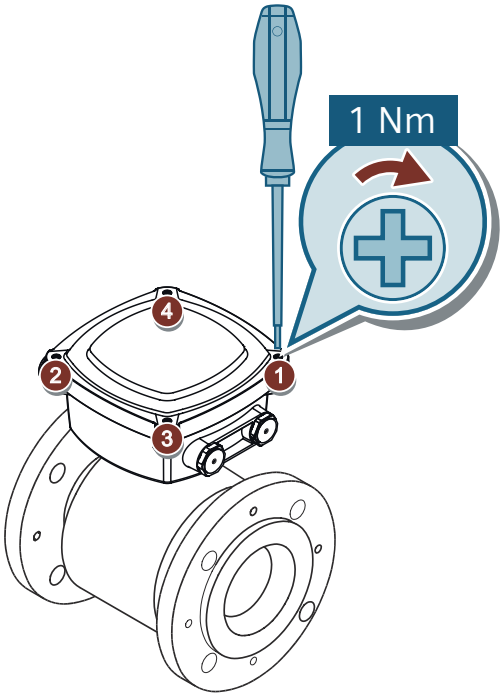

8. To obtain optimum sealing, tighten cable glands.

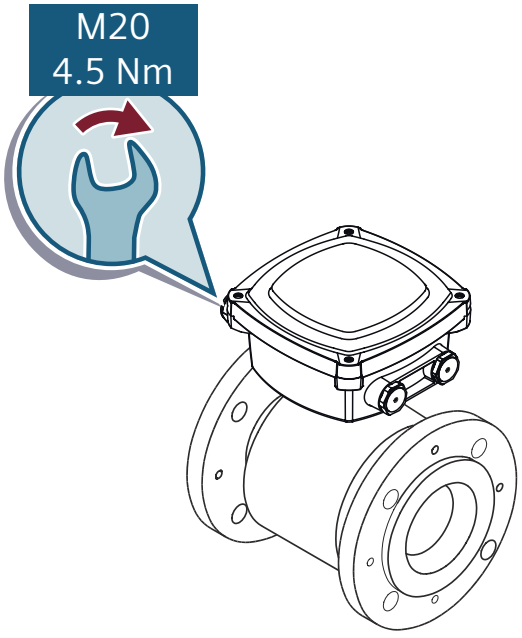

6.3.2 Connecting the transmitter

Before you start

- Read the Safety notes (Page 15)
- Read the Basic safety notes: Installing/mounting (Page 23)
- Read the Basic safety notes: Connecting (Page 39)
- Mount the terminal box on a wall or pipe (Page 27).

Procedure

WARNING

Only connect through cable glands on the side of the terminal box

To comply with UL 61010-1 do not connect through the cable glands on the bottom of the terminal box. Only connect through the cable glands on the side of the terminal box.

1. Mount SENSORPROM® memory unit on the connection board.

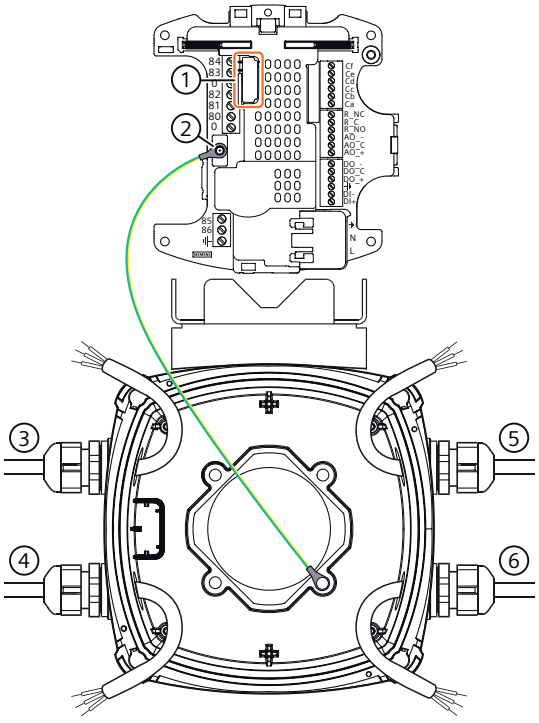

① SENSORPROM mounting location
② Grounding wire
③ Electrode cable
④ Coil cable - keep separate from electrode cable
⑤ Output cable
⑥ Power supply

2. Fit M20 or ½" NPT cable glands for supply and output cables. For NPT cable glands use the M20 to NPT adapter.

Note

NPT adapter

The NPT adapter is not part of UL 61010-1 approval scope.

3. Cut off the black wire on the coil cable. Cut off the outer shield on the electrode cable. Fit coil and electrode cable through the cable glands.
4. Connect coil cable ④ and electrode cable ③ to the connection boardHotspot-Text (Page 52). Use flexible conduits only.
   - Connect the blue wire of the coil cable to terminal 85 and the brown wire to terminal 86.
   - Connect the brown wire of the electrode cable to terminal 82, the black wire to terminal 0 and the blue wire to terminal 83.
   - For special type electrode cables connect the individual wire shields to terminals 0, 81 and 84.
5. Fit the supply and output cables through the cable glands.

6. Connect the supply cable to the provided power supply connector. Connect the outputs to the connection board in accordance with Electrical connection (Page 52).
7. Mount the connection board inside the transmitter terminal box. Tighten completely with maximum torque: 1 Nm.

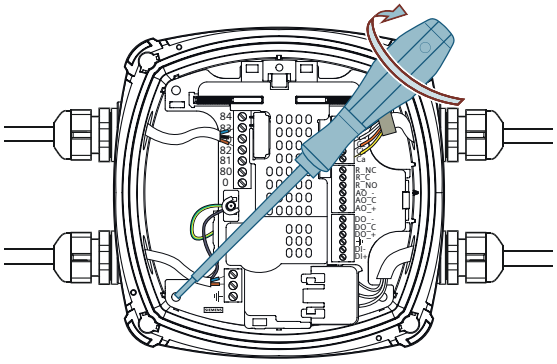

8. Mount transmitter on terminal box by cross tightening as indicated. To avoid damage to the device, do not fully tighten right away .

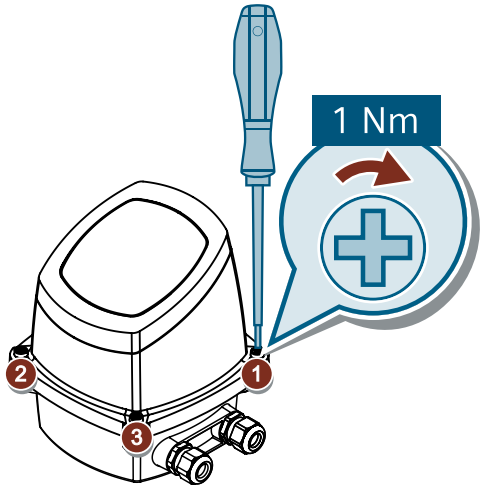

9. To obtain optimum sealing, tighten cable glands.

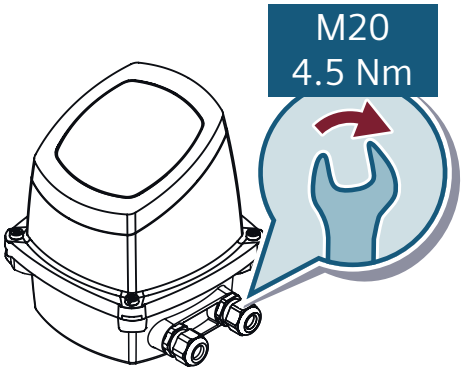

NOTICE
Direct sunlight Direct sunlight can increase the operating temperature above its specified limit, and decrease display visibility. A sun shield is available as accessory.

See also

Connecting the communication cable (Page 57)

6.4 Electrical connection

WARNING
Safety requirement for DC power supply input The DC power supply version is intended to be supplied from one of the following: • Isolated limited energy source UL61010-1, 3rd ed cl. 9.4 • Limited power source per UL62368-1 • PS2 per UL62368-1 • Class 2 per NEC

WARNING
Safety requirement for power supply for communication terminals When applicable, the communication terminals are intended to be supplied from one of the following: • Isolated limited energy source UL61010-1, 3rd ed cl. 9.4 • Limited power source per UL62368-1 • PS2 per UL62368-1 • Class 2 per NEC

WARNING
Safety requirement for power supply for communication terminals The device is intended to be supplied from an isolated Limited Energy Source per UL61010-1, 3rd ed cl. 9.4 or Limited Power Source per UL62368-1 or Class 2 per NEC.

⚠ WARNING

Disconnecting the device from power

To be able to disconnect the device from the electrical supply source, install an external switch or a circuit breaker upstream to the device.
Choose a position so that it is easy to operate the disconnecting protection device.

⚠ WARNING

Grounding

Connect mains protective ground earth to PE terminal in accordance with diagram (due to class 1 power supply).

⚠ WARNING

High vibration environment

Use relay output only in NO mode in an environment with high vibration.

Note

Mains cable connection

Mains cable connection with cable glands is allowed for NFPA79 applications only.

Note

For mains wiring: Use cables in copper material, with a conductor temperature rating of at least 65 °C.

Note

Terminals 81 and 84 are only to be connected if a special electrode cable with double shielding is used, for example when using empty pipe function or long cables.

Note

In applications with a risk of low supply voltage below the specifications for more than 10 minutes, install an under voltage relay or protection circuit for DC installations.

Note

Output cables

Use shielded cables if long cables are used in noisy environments.

Note

Digital output

If internal resistance of a load exceeds 10 kΩ, connect an external 10 kΩ load resistor in parallel to this load.

Note

Mains frequency

Select the right mains frequency in parameter 2.1.2 for the mains supply frequency, that you are using.

For input and output specification refer to Technical specifications (Page 119).

Connection board overview

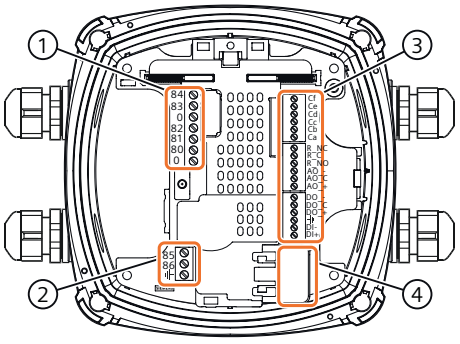

① Electrode cable terminals
② Coil cable terminals
③ Input/Output and communication terminals
④ Power supply terminal

Power supply

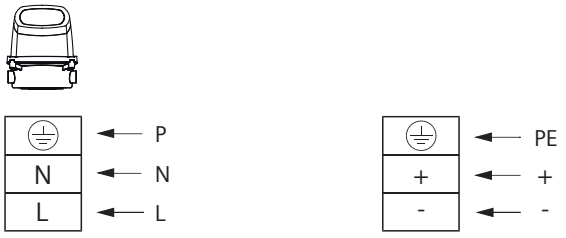

Current output

Table 6-1 Current output

Active output	Passive output
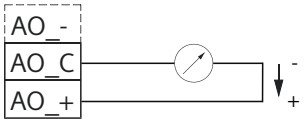	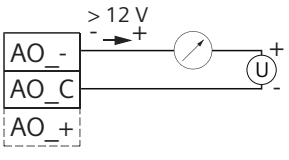

Digital output

Table 6-2 Digital output - current driven

Active output	Passive output	Menu setup
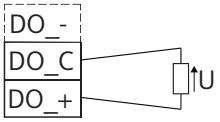	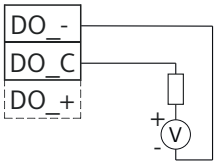	Negative: Positive:  R = Pull up/down resistor < 1 kΩ may be required - depending on Cables/Input resistance

Relay output

Table 6-3 Relay output

Terminal	Description
R_NC	Normally closed
R_C	Common
R_NO	Normally open

Communication cable

Ca, Cb, Cc, Cd, Ce, Cf are reserved for communication modules as described in Connecting the communication cable (Page 57).

Transmitter to sensor cable connection

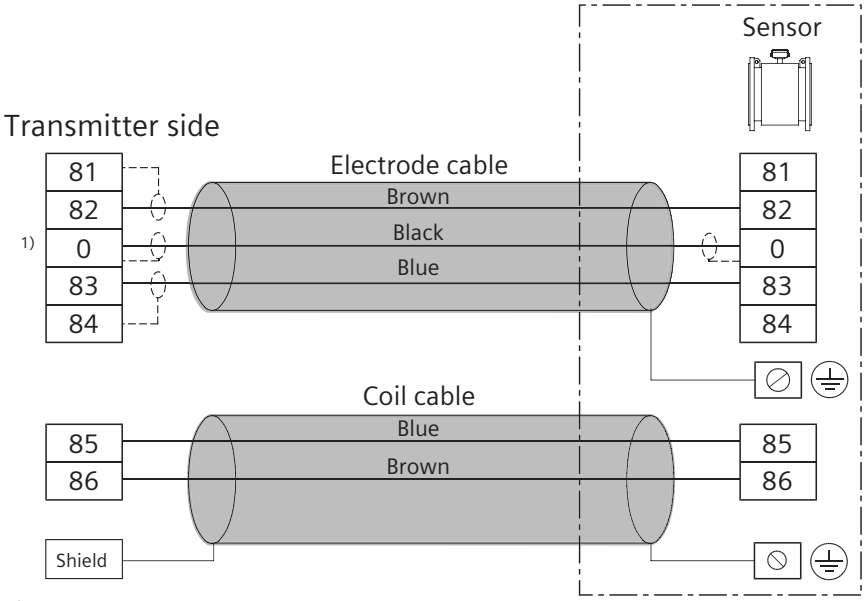

1) Note:
Special cable with individual wire shields (shown as dotted lines) are only required when using empty pipe function or long cables.

Figure 6-2 Electrode and coil cable

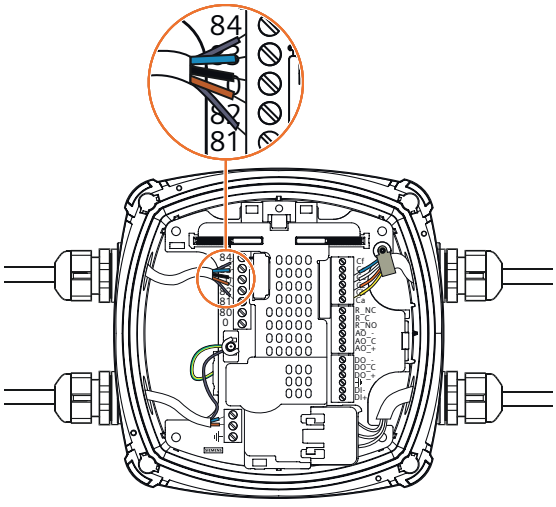

Figure 6-3 Electrode cable with individual wire shields

6.5 Connecting the communication cable

Before you start

- Read the Safety notes (Page 15)
- Read the Basic safety notes: Connecting (Page 39)

Connecting the communication cable

1. Remove 40 mm of outer insulation.
2. Shorten shield to 10 mm and fold it back over the outer insulation.

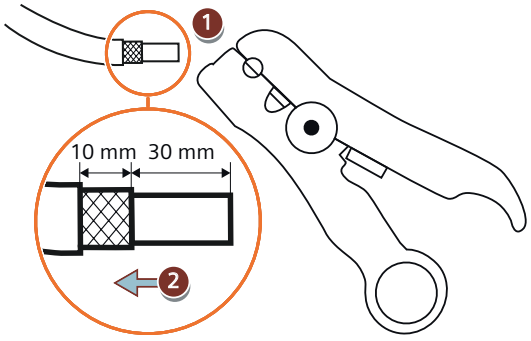

3. Mount cable clamp and remove inner insulation. Remove 7 mm of insulation for each wire.



4. Adjust the wiring on the connection board in accordance with the type of communication module that you are using.
   See below table as a reference. The wiring info can also be found on a label on the communication module itself:

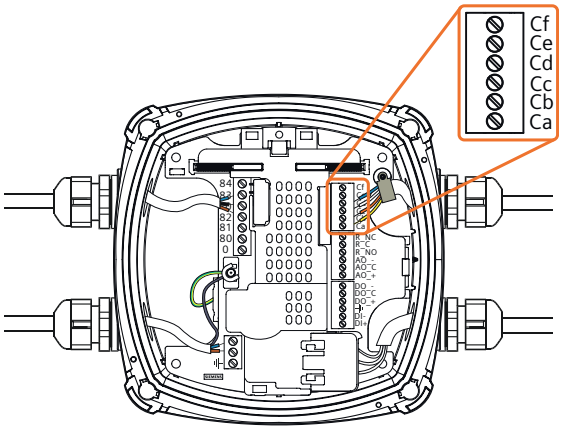

Terminal	Function						
	HART active	HART passive	EtherNet/IP & PROFINET	MODBUS RTU & Profibus DP	Profibus PA	Digital output active	Digital output passive
Cf	nc	nc	nc	nc	nc	DI-	DI-
Ce	nc	nc	nc	nc	nc	DI+	DI+
Cd	nc	-	RD- (blue[1])	A_{out} (-)	nc	nc	nc
Cc	nc	+	RD+ (white[2])	B_{out} (+)	nc	nc	DO-
Cb	-	nc	TD- (orange[3])	A_{in} (-)	PA-	DO-	DO+
Ca	+	nc	TD+ (yellow[4])	B_{in} (+)	PA+	DO+	nc

nc = not connected

1 RJ45: green

2 RJ45: white-green

3 RJ45: orange

4 RJ45: white-orange

5. Screw the cable clamp to the connection board. Tighten the cable gland.

Commissioning 7

7.1 Basic safety notes

WARNING

Commissioning and operation with error message

If an error message displays, correct operation is no longer guaranteed.

- Check the severity of the error.
- Correct the error.
- If the error still exists:
  - Take the device out of operation.
  - Do not restart the device.

The same risk continues to apply when error messages are switched off or disabled.

WARNING

Hazardous contact voltage

Risk of injury through hazardous contact voltage when the device is open or not completely closed.

The degree of protection specified on the nameplate or in Technical specifications (Page 119) is no longer guaranteed if the device is open or not properly closed.

- Make sure that the device is securely closed.

See also

Installing/mounting (Page 23)

WARNING

Loss of protection due to a misuse of the equipment

If the equipment is used in a manner not specified by the manufacturer, the protection provided by the equipment is lost.

7.2 Local display

The device is commissioned/operated with the buttons on the local display. Remove the protective foil before operating the device.

The buttons are actuated by touching the panel on the appropriate button. The graphical display above the buttons gives a menu-guided operation of the individual device function/ parameters. Successful operation of the button is confirmed by a small green LED under the display.

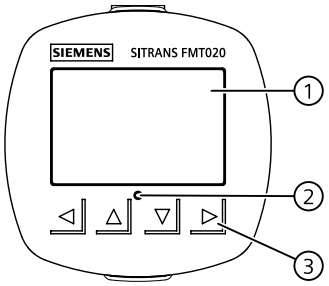

① Graphical display
② LED (for indication of button operation)
③ Local buttons

Note

Local display timeout

If no button is pressed for 10 minutes, the display switches to show operation view. If Backlight is set to Automatic, display backlight goes off automatically 30 seconds after the last button press.

Note

Operation does not require opening of the device. This means that the high degree of protection of IP67 and safety are guaranteed at all times.

7.3 Access control

You can view all items in the HMI menu but the parameters are protected against changes through access level control. To gain access, select one of the following access levels:



Figure 7-1 SelectAccessLevel

- Read only
  Allows no configuration. The parameter values can be viewed only (indicated by a symbol). No PIN code required.
- User
  Allows configuration and service of all parameters except calibration parameters. Default PIN code is 2457.
- Expert
  Allows configuration and service of all parameters including flow and calibration parameters. Default PIN code is 2834.

PIN codes can be changed in **"Security"** (menu item 5). To improve security it is recommended to change the PIN during commissioning.

Note

Lost PIN code

If the PIN code is lost, provide Siemens customer support with the "Recovery ID" (menu item 5.3). Siemens customer support will provide a personal unblocking key (PUK) to be entered in "PIN recovery" (menu item 5.4).

Disable access level control

If logged in as Expert you can **Deactivate user PIN**. As User you will not be prompted to enter the password. With deactivated user PIN the default access level remains as "User" making expert level parameters unavailable. Enabling the access level control can be done in **Activate user PIN** and requires entering the Expert password.

Auto logout function

You will **not** be prompted for password for 10 minutes after the last button press.

NOTICE
Device restart Whenever the device is restarted, the access level is reset to "Read only".

7.4 Device startup

Before you start

- Read the Basic safety notes (Page 59).
- Install (Page 23) and connect (Page 39) the device

Procedure

1. Power-on the device.
   For an initial startup, prompts for each of the following steps appear after power-on.
2. Set the language.
   The first time the device is configured, you will be prompted to set the language. To change the language after initial setup, access menu item 6.
3. Enter the "Quick start" menu to set up the most important parameters.
   Essential parameters should be considered before using the device for the first time.

For any subsequent startup, after power-on, the device automatically starts in operation view. A transition screen showing first the Siemens logo and then the current firmware revision of the product is displayed while the first measurement is being processed.

7.5 Wizards

The first view in each wizard (About - view 1) is a description of what settings/actions can be performed using the specific wizard.

The last view in each wizard (Finished) shows that the last step of the wizard was completed.

Any parameter changes confirmed with ▷ are saved immediately.

At any time in any wizard selecting Exit will bring you back to the main wizard menu without discarding changes.

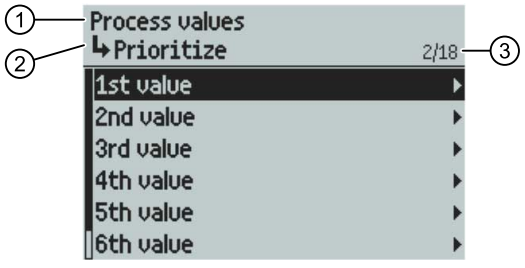

① Wizard name
② Step name / Parameter name
③ View number / Total views in wizard

The purpose of the wizards is to guide you through a quick set-up of various parameters.

The following HMI wizards are available:

- Sensor settings
- Process values
- Inputs and outputs
- Self test
- Data logging

Use the ⊿ and ▽ buttons to highlight the desired wizard and press right key to enter the wizard. The first view shows a short description of which settings can be done.

Table 7-1 Button functions - wizards

Button	Function
◁	Leave menu without saving changes
⊿	Scroll up in list of options/change parameter value
▽	Scroll down in list of options/change parameter value
▷	First button press: Select option. Second button press: Confirm selection and save setting.

7.6 Web server

7.6.1 Establishing a connection to the web server

Introduction

You can operate the field device and monitor process values remotely via the Web server.

The field device only supports one connection to the Web server at a time.

Requirement

- You have installed a communication module for PROFINET or EtherNet/IP.
- You have enabled the "Web server" parameter.
  Parameter assignment (Page 79)
- You are using Google Chrome as web browser.

Procedure

1. Enter the IP address of your field device in the address box of the browser.
   You can display the IP address of your field device in the "IP address" parameter on the local display and in the parameter assignment tool (e.g. SIMATIC PDM).

   Note

   The address bar shows the connection as "Not Secure"

   The connection is secure. Google Chrome shows this message because the device uses a self-signed certificate. To make this certificate trusted by your browser, install the Siemens Sitrans root certificate as described in this procedure.

2. Confirm the error message for the unsecure connection.

3. Before the first logon, assign passwords for all user roles.

   Note

   Your company policies must ensure that only authorized personnel assign the initial passwords.

4. Log on with the desired role.
5. Open the sidebar menu and click on "Device documentation".
6. Download the certificate with the name "SitransFieldDeviceRootCA_YYYY_MM_DD.cert.pem".
7. Install the certificate through Google Chrome by navigating to "Settings > Privacy and security > Manage certificates". Import the certificate to "Trusted Root Certification Authorities".

Result

Note

Error message after installing the certificate

The secure connection still persists. The error message is displayed because the default IP address of the field device has been changed. The IP address of the field device no longer matches the certificate created in the factory.

Once you have logged on successfully, the main page appears.

Troubleshooting

If the connection to the Web server is not established, check the following:

- Is the parameter "Web server" enabled?
- Has the IP configuration of the field device been performed?
- Are your PC and the field device in the same IP subnet?

7.6.2 Functions of the web server

Overview

Main page (example)

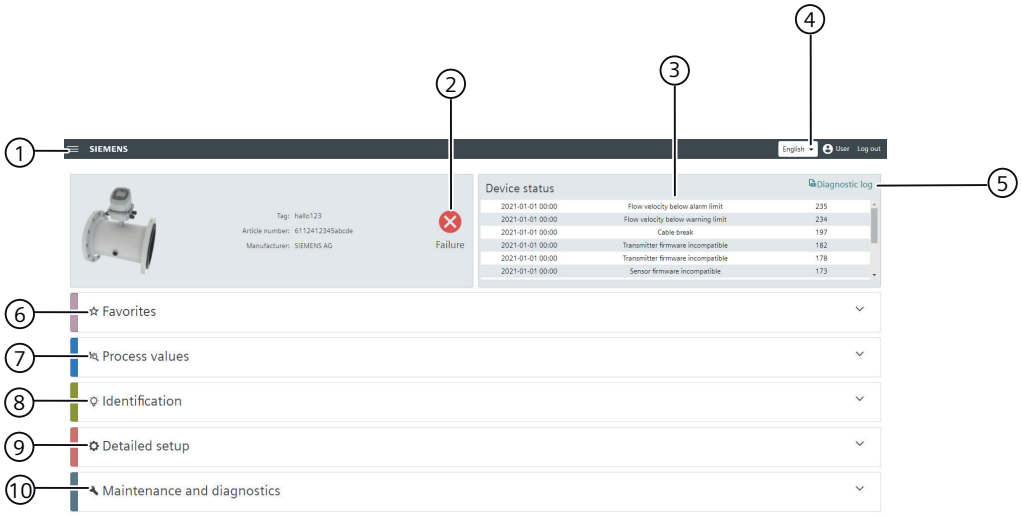

① Side menu (e.g. copy parameters, documentation)
② Display of device status according to NAMUR NE 107
③ List of active diagnostics
④ Setting the language
⑤ Diagnostic log of the active and inactive diagnostics
⑥ Favorites, display of the desired process values in detail

Access to the parameters and functions from the device via the main menus:

⑦ Displaying and configuring the process values
⑧ Identification, Displaying and configuring the device data
⑨ Detailed setup, with parameters for specific settings (e.g. for communication)
⑩ Maintenance and diagnostics (e.g. operating time)

Charts

In the "Favorites" main menu, you have the option to monitor the desired process values in detail and display them as charts.

You also have the option to record the chart data and save it locally.

Note

If no action occurs for 10 minutes, you are automatically logged off for security reasons:

- You can save the most recently recorded chart data locally or go directly to the logon page.

Note

Copying parameters

The function to copy parameters does not include all parameters and only saves them temporarily. Do not rely on this function to archive configurations. After restoring ensure that all critical parameters are correct. Refer to the menu structure excel file to check which parameters can be copied FMT020 HMI export in SIOS (https://support.industry.siemens.com/cs/document/109826074).

Operating

8

8.1 Operating the device on the local display

8.1.1 Display views

There are three view types:

- **Operation view**
  The operation views are fully configurable to show different process values in different operation view types. Depending on the operation view type configuration the view is one of the following:
  - Reading the process values (Page 69): Show the measurement values.
  - Handling alarms and diagnostics (Page 71): Show the active alarms in a list.
  - Operating the totalizers (Page 72): Enable the totalizer reset and the dosing control.
- **Parameter view**
  The Parameter view (Page 73) shows the menus and parameters. The parameter view is used to navigate through the menus and parameters in the device.
- **Edit view**
  The Edit view can be entered from the parameter view. The edit view is used to edit the parameters.

Navigating in the views

The following graphic shows an example of how to navigate between operation views and alarm views.

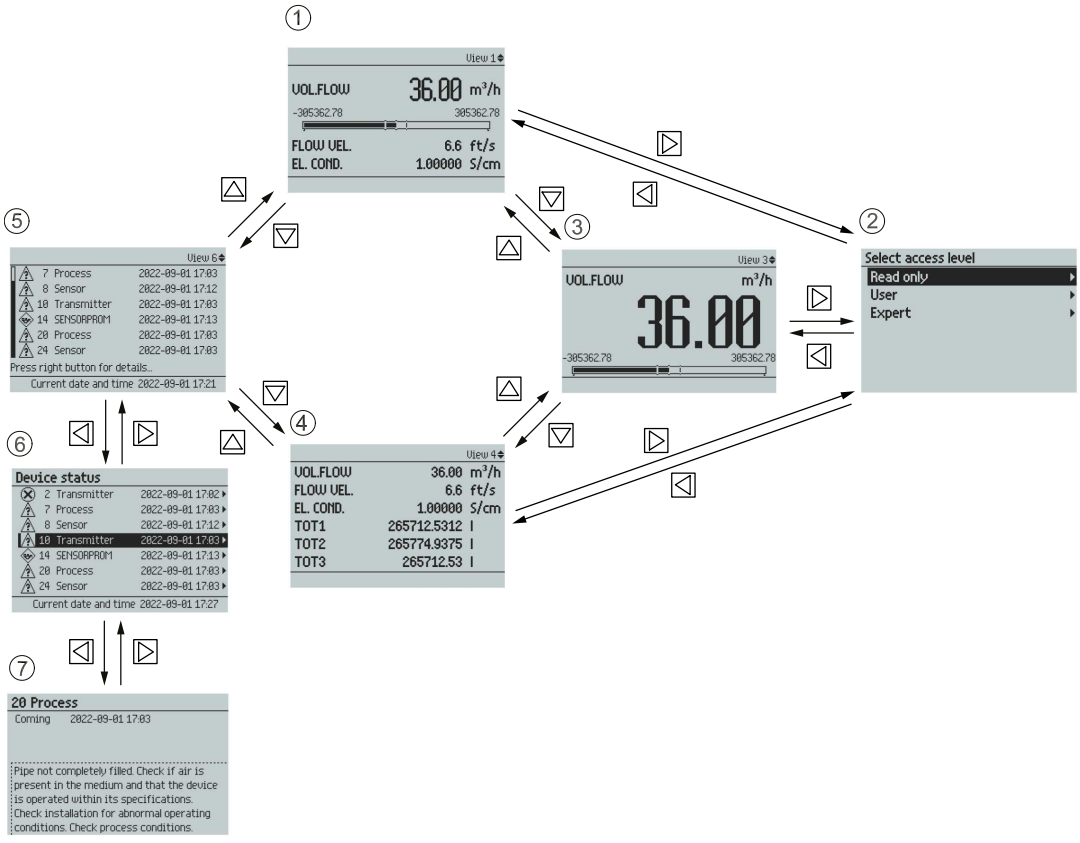

① Operation view
② Access level view
③ Operation view
④ Operation view
⑤ Alarm view - level 1
⑥ Alarm view - level 2
⑦ Alarm view - level 3

You can navigate through the menu structure items in the device using the four buttons on the display as described below.

Table 8-1 Key functions - menu structure navigation

Key	Function
◁	Return to previous item.
△	Select the item above.
▽	Select the item below.
▷	Enter the selected item.

8.1.2 Fixed display texts

The following table lists the fixed display texts for the process value names available on the operation view.

Table 8-2 Process values

Fixed display text	Process value name
VOL.FLOW	Volume flow
FLOW VEL.	Flow velocity
EL. COND.	Electrical conductivity
TOT1	Totalizer 1
TOT2	Totalizer 2
TOT3	Totalizer 3
TRN.TEMP.	Transmitter electronics temperature
LOOP CURR.	Loop current
CURR. OUT.	Current output
DIG. OUT.	Digital output
RELAY OUT.	Relay output

8.1.3 Reading the process values

The current value of the process values can be displayed either as one or more numeric values or as numeric value(s) in combination with a bar graph or trend chart. The following view types are available:

- 1 value
- 1 value and horizontal bar graph
- 1 value and trend chart
- 3 values and horizontal bar graph
- 6 values
- Totalizer
- Diagnostics

Table 8-3 Key functions - measurement view

Key	Function
	No functionality
	Go to the previous measurement view
	Go to the next measurement view
	Enter the parameter view

1 value

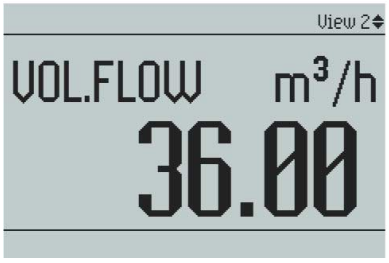

1 value and horizontal bar graph

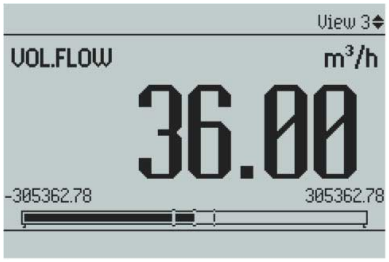

1 value and trend chart

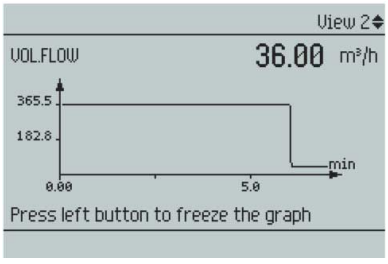

3 values and horizontal bar graph

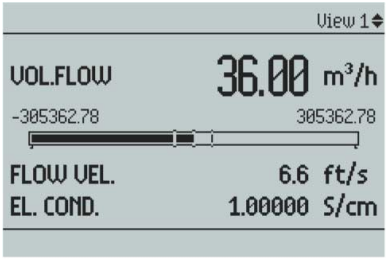

Note

Bar graphs

The bar graph limit values indicate the set lower and upper alarm limits, and the vertical lines in the bar graph indicate the set lower and upper warning limits.

6 values

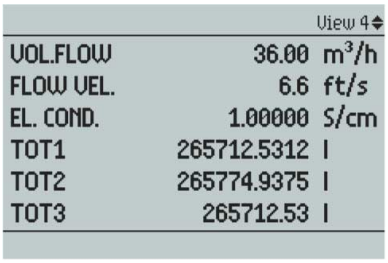

8.1.4 Handling alarms and diagnostics

When the alarm list is displayed in the main view, press ▷ to get more detailed information about the active alarms.

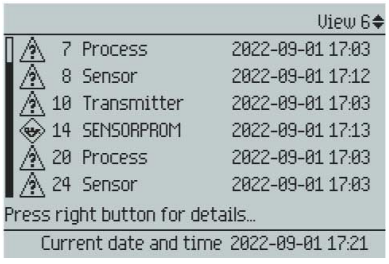

Table 8-4 Key functions - alarms list view

Key	Function
◁	Exit alarm list view
△	Select the item above in the list; keep pressing the key to accelerate scrolling up the selection list
▽	Select the item below in the list; keep pressing the key to accelerate scrolling down the selection list
▷	View more information on the selected alarm

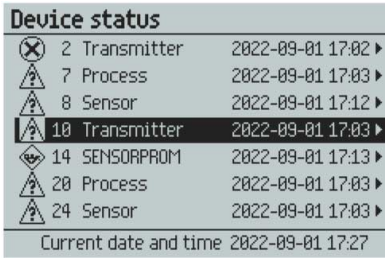

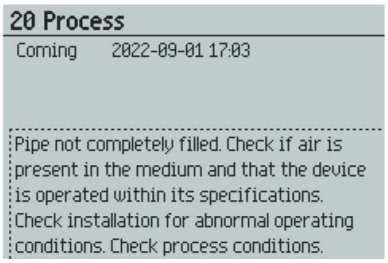

Press ◁ to exit the detailed alarm information.

8.1.5 Operating the totalizers

When totalizer is displayed in the main view, press ▷ to access the totalizer operation.

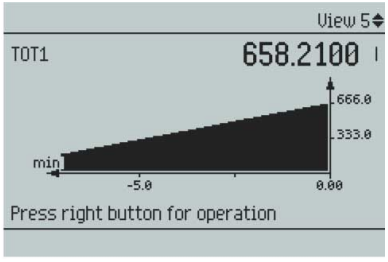

Table 8-5 Key functions - totalizer operation

Key	Function
◁	Exit totalizer operation
△	Select action to perform
▽	Select action to perform
▷	Perform selected action

The available actions are:

- Reset and resume
- Reset and hold
- Preset and resume
- Preset and hold
- Resume
- Hold

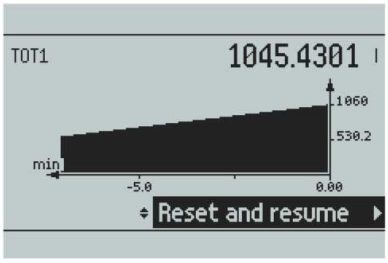

8.2 Parameter view

The parameter view presents the menu structure of the device. All menu items are uniquely identified with a menu item number.

Level 1 of the parameter view (entered from the operation view) is standardized for all Siemens Process Instrumentation devices and covers the following groups:

1. Quick start (menu): Lists the most important parameters for quick configuration of the device. All parameters in this view can be found elsewhere in the menu.
2. Setup (menu): Contains all parameters which are needed to configure the device.
3. Maintenance and diagnostics (menu): Contains parameters which affect the product behavior regarding maintenance, diagnostics and service.
   Examples: Verification, failure prediction, device health, data logging, alarm logging, report, condition, monitoring, tests, etc.
4. Communication (menu): Contains parameters which describe the HART, PROFINET and EtherNet/IP communication settings of the device.
5. Security (menu): Contains parameters which describe all security settings of the device.
6. Language (parameter): Parameter for changing the language of the local display.

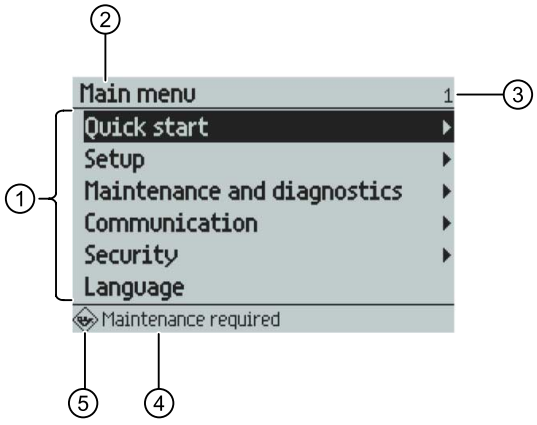

① List of menus and parameters
② Name of the previously selected menu
③ Menu item number
④ Alarm status text
⑤ Alarm icon

Figure 8-1 Example of parameter view

Locked parameters

A lock icon (🔒) in the parameter view indicates that the parameter is read only.

For further information on how to gain access to the menus, see Reading/changing parameters (Page 74).

8.3 Reading/changing parameters

Depending on your access level, you can read the current value or edit the value of the selected parameter.

8.3.1 Alphanumeric parameters

Read only

The view shows the set value. Press ◁ to exit the view.

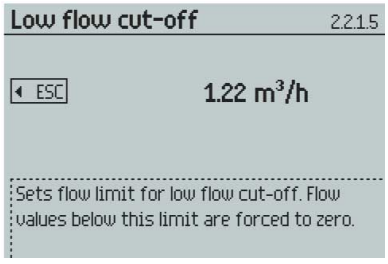

Edit

Editable alphanumeric parameters are displayed as shown here.

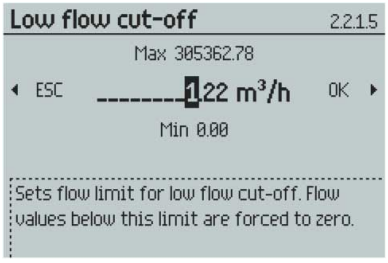

Table 8-6 Key functions - editing alphanumeric values

Key	Function
◁	Select the next left position. If the most left position is selected: exit the parameter edit view without confirming the changes. Keep pressing the key to jump to the most left position.
△	Change the selected number/character. Numeric characters: increase the number by one (for example from 7 to 8) ASCII characters: select the previous character in the alphabet.

Key	Function
▽	Change the selected number/character. Numeric characters: decrease the number by one (for example. from 8 to 7) ASCII characters: select the next character in the alphabet.
▷	Select the next right position. If most right position is selected: confirm the change and exit the parameter edit view. Keep pressing the key to jump to the most right position.

Note

Ensure that the new value is within the minimum/maximum range when changing numeric values.

Note

signs in display

The display is unable to show the measured value. Change the measurement unit or the resolution.

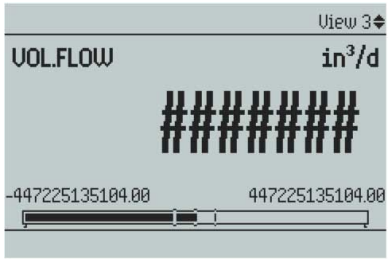

Changing the resolution

In order to change the number of visible decimals shown in the operation view, set the decimal places as defined in **Decimal places** (for example menu number 2.2.2.4).

The resolution can also be changed by changing the resolution of one configuration parameter for this process value (for example **Low flow cut-off** menu number 2.2.2.5). Any changes in resolution will change the resolution of all other configuration parameters for this process value as well.

8.3.2 Parameter list read only view

Parameter list - read only

Table 8-7 Key functions - read only

Key	Function
◁	Exit parameter list
△	No functionality

Key	Function
▽	No functionality
▷	No functionality

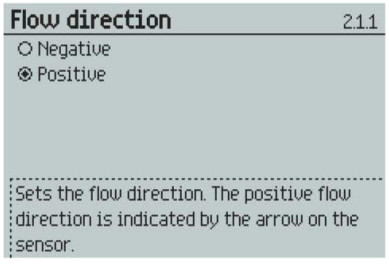

Parameter list - edit

Table 8-8 Key functions - edit

Key	Function
◁	Escape the view without changing the value.
△	Select the option above.
▽	Select the option below.
▷	Confirm selected option.

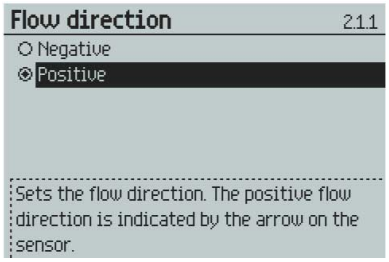

Multiselection

Table 8-9 Key functions - multiselection of options

Key	Function
◁	Escape the view without changing the value.
△	Scroll up in the list. If the uppermost position is selected: highlight Save settings.
▽	Scroll down in the list. If the lowermost position is selected: highlight Save settings.
▷	Select / deselect list entries.

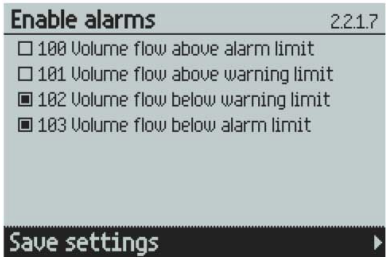

It is possible to select/deselect multiple list entries.

Parameter assignment

9

9.1 Menu structure

Menu structure

The following tables serve as an overview for menus up to level 2 out of 5. For a complete overview download the menu structure excel file from Siemens Industry Online Support (https://support.industry.siemens.com/cs/document/109826074).

Menu ID	Menu name/ parameter	Description
1	**Quick start**	
1.1	Sensor settings	
1.2	Process values	
1.3	Inputs and outputs	
1.4	Communication	
1.5	Self test	
1.6	Data logging	
2	**Setup**	See AUTOHOTSPOT
2.1	Sensor	
2.2	Process values	See Process values (Page 80)
2.3	Totalizers	
2.4	Inputs and outputs	See Inputs and outputs (Page 85)
2.7	Date and time	
2.8	Local display	
3	**Maintenance and diagnostics**	
3.1	Identification	
3.2	Diagnostics	
3.3	Maintenance	
3.4	Monitoring	
3.5	Peak values	
3.6	Characteristics	
3.7	SensorFlash	
3.8	Simulation	
3.9	Audit trail	
3.10	Self test	
3.11	Resets	

Menu ID	Menu name/ parameter	Description
3.12	Restore setup	
3.13	Firmware update	
3.14	Spare part replacement	
4	**Communication**	
4.2	HART	See HART (Page 127)
4.3	Modbus RTU	See Modbus (Page 137)
4.4	PROFIBUS DP/PA	
4.5	PROFINET	See PROFINET (Page 130)
4.6	EtherNet/IP	
4.7	Web server	Disable resets the passwords of the web server. After enabling, new passwords must be assigned for the user roles.
5	**Security**	See Access control (Page 60)
5.1	Change user PIN	
5.2	Change expert PIN	
5.3	Recovery ID	Displays recovery ID that must be provided to Technical Support to obtain the PIN-Unlock-Key (PUK) required to recover the PIN(s).
5.4	PIN recovery	Used to enter PIN unlock key (PUK) which resets PIN(s) to factory default value. The PUK is available from Technical Support. Default PIN(s) provided in the operating instructions.
5.5	Enable user PIN	Used to enable user PIN. To change parameter settings, the user PIN is required.
5.6	Disable user PIN	Used to disable user PIN. To change parameter settings, no user PIN is required.
5.7	Local display	
5.8	Communication	
6	**Language**	Sets the language for the local display.

See also

EtherNet/IP (Page 150)

9.2 Parameter explanations

9.2.1 Process values

The process values are updated at the rate of the excitation frequency the communication between sensor and transmitter runs every 10 ms (100 Hz update rate).

Process value parameters

The process values are:

- Volume flow
- Flow velocity
- Electrical conductivity

Limits and hysteresis

Limits

Alarm and warning limits can be assigned to all process values. The following limit parameters are available for each process value:

- Upper alarm limit
- Upper warning limit
- Lower warning limit
- Lower alarm limit
- Alarm hysteresis

The system reports a process alarm when the process value exceeds the Upper alarm limit or the Lower alarm limit. Likewise, the system reports a process warning when the process value exceeds the Upper warning limit or the Lower warning limit. Process value alarms and warnings are displayed in the local display as well as at the communication interfaces.

Hysteresis

The hysteresis functions as follows:

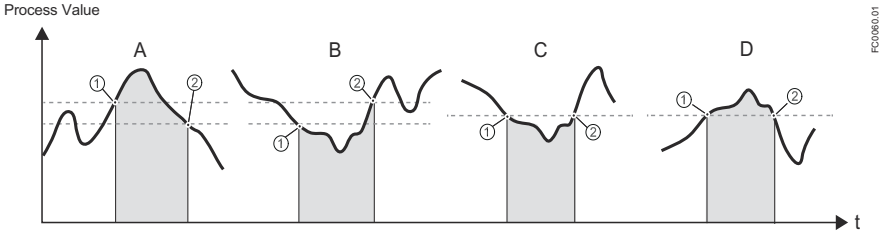

Figure 9-1 Hysteresis

A: Upper alarm limit with hysteresis
The alarm is triggered when the process value overshoots the Upper alarm limit (1). The alarm is cleared when the process value undershoots the Upper alarm limit minus hysteresis (2).

B: Lower alarm limit with hysteresis
The alarm is triggered when the process value undershoots the Lower alarm limit (1). The alarm is cleared when the process value overshoots the Lower alarm limit plus hysteresis (2).

C: Lower alarm limit without hysteresis
The alarm is triggered when the process value undershoots the Lower alarm limit (1). The alarm is cleared when the process value overshoots the Lower alarm limit (2).

D: Upper alarm limit without hysteresis
The alarm is triggered when the process value overshoots the Upper alarm limit (1). The alarm is cleared when the process value undershoots the Upper alarm limit (2).

Note

Flow direction warning

The limit function can be used to signal the flow direction by setting the Lower warning limit for the Process value to 0. A warning will occur in case of negative flow.

All alarms and warnings can be signaled on the output if Status mode is set to Individual alarms, see Alarm status (Page 93).

Limit behavior on the outputs

Process alarms can trigger Fail Safe behavior on the Signal Output, whereas process warnings are only used as information available in local display and on the communication. Process value will bring the Signal output to Fail Safe mode if:

- Signal output is configured to Current, Pulse or Frequency

- Fail Safe Mode is configured to react on a failure

- Process alarm occurs on a process value selected on the output

The alarm behavior is described in detail in Diagnostics and corrective actions (Page 106).

Hysteresis is used to adjust the tolerance by undershooting or overshooting the limit as described below.

9.2.2 Low flow cut-off

In certain applications, 0% flow signals below a certain flowrate are desired. In these applications, the flow signal can be forced to zero, when the flow is lower than a predefined flow value (Low flow cut-off).

The device provides one parameter for setting the low flow cut-off:

- Low flow cut-off

The low flow cut-off can be configured independently for both volume flow and flow velocity.

9.2.3 Insulation test

The insulation test checks the insulation integrity of the sensor. The test checks the signal noise immunity and the electrode signal circuit. During insulation test an alarm is raised to indicate that the conductivity and flow measurement are stopped. See Diagnostics and corrective actions (Page 106). The parameter "Fail-safe behavior" determines what the transmitter displays while in fail-safe state.

9.2.4 Measurement linearization

9.2.4.1 Measurement linearization

The measurement linearization can be a one point adjustment or a two point adjustment.

You use the adjustment offset to set the device characteristic at the low adjustment point.

You use the adjustment offset and adjustment factor to set the device characteristic between the low and the high adjustment point.

9.2.4.2 Setting one point adjustment

Requirement

- The process is set on a stable flow.
- A reference value of a reference device for volume flow is known (VF_{REF}).
- You have made a first volume flow measurement with the newly installed FMT020 under the current process conditions (VF_{FMT020}).
- The reference volume flow (VF_{REF}) and FMT020 measured volume flow (VF_{FMT020}) are in the same volume flow unit and within the measuring range.

Setting one point adjustment

1. Start the measurement linearization wizard in menu 3.6.6.10.3.
2. Calculate the adjustment offset = VF_{REF-} - VF_{FMT020}. Enter the result in the first step of the measurement linearization wizard.
3. Skip through the second step, leaving the adjustment factor at 1.0.
4. Confirm in the third step that the displayed volume flow matches the current volume flow.

Result

The device adjusts to the measured value.

The device moves the characteristic by the difference between the original and the new adjustment point.

Note

Measurement difference might only reduce around the calibration point

If the measurement difference is not stable between the two devices, measurements further away from the adjustment point might have a higher measurement difference.

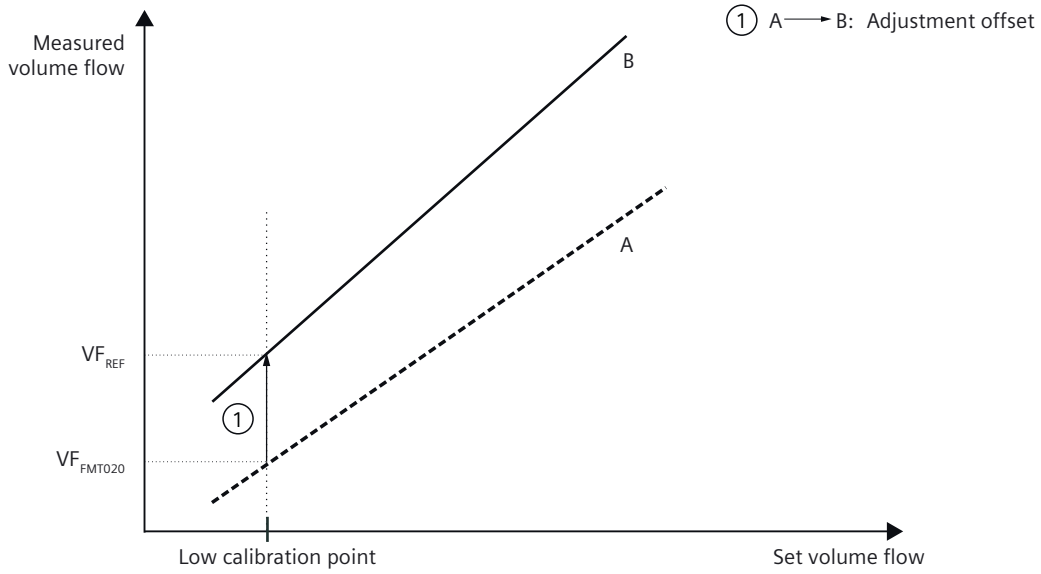

A Original characteristic

B Characteristic after the one point adjustment of the low adjustment point

Figure 9-2 One point adjustment

9.2.4.3 Setting two point adjustment

Requirement

- The process is set alternately on a stable low flow and a stable high flow.
- Two reference values of a reference device for low and high volume flow are known ($VF_{REF\ low}$ and $VF_{REF\ high}$).
- You have made volume flow measurements with the newly installed FMT020 for low and high volume flow ($VF_{FMT020\ low}$ and $VF_{FMT020\ high}$).
- The reference volume flows ($VF_{REF\ low}$ and $VF_{REF\ high}$) and FMT020 measured volume flows ($VF_{FMT020\ low}$ and $VF_{FMT020\ high}$) are in the same volume flow unit and within the measuring range.

Setting two point adjustment

1. Start the measurement linearization wizard in menu 3.6.6.10.3.
2. Calculate the adjustment factor $AF_{FMT020} = (VF_{REF\ high} - VF_{REF\ low}) / (VF_{FMT020\ high} - VF_{FMT020\ low})$. Enter the result in the second step of the measurement linearization wizard.
3. Calculate the adjustment offset = $VF_{REF\ low} – (AF_{FMT020} \times VF_{FMT020\ low})$. Enter the result in the first step of the measurement linearization wizard.
4. Confirm in the third step that the displayed volume flow matches the current volume flow.

Result

The device adjusts to the measured value.

The device moves the characteristic by the difference between the original and the new adjustment points.

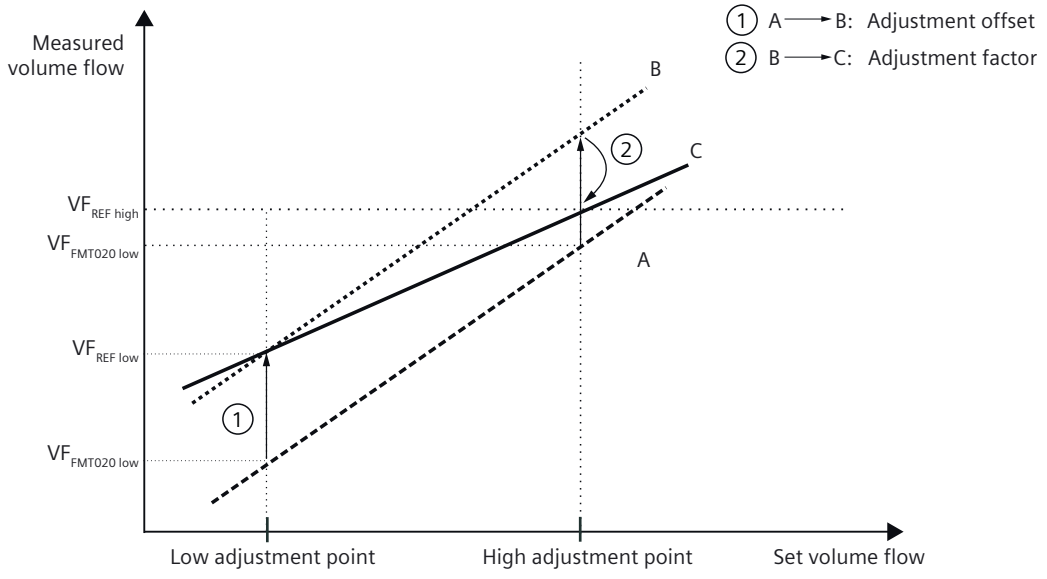

A Original characteristic

B Characteristic after the two point adjustment of the low adjustment point

C Characteristic after the two point adjustment of the high adjustment point

Figure 9-3 Two point adjustment

9.3 Inputs and outputs

The hardware functionality of input and output is fixed when ordering the product. The available configuration is described in the following table:

HW configuration	**SW configuration available to the user**
Current output (HART)[1)]	• Current output 0/4-20 mA • Multidrop mode
Current output	• Current output 0/4-20 mA

HW configuration	SW configuration available to the user
Digital output	• Frequency output • Pulse output • Status output
Relay output	• Status signals • Alarms and diagnostics • Flow direction

[1] Only with a HART communication module

9.3.1 Current output

9.3.1.1 Current output

Current output configuration

The following process values can be assigned to the current output:

- Volume flow
- Flow velocity
- Electrical conductivity

The accuracy specified for the analog output signal applies only within the range 4 to 20 mA. Lower limit (4 mA) and upper limit (20 mA) can be assigned to any specific flow values.

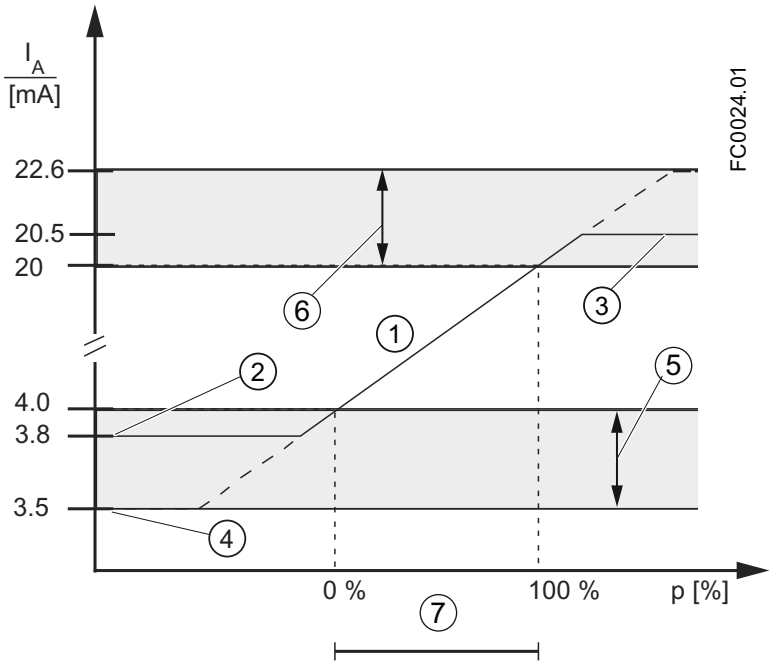

① Linear control range
② Measuring range lower limit
③ Measuring range upper limit
④ Lower fault current value
⑤ Recommended setting range for lower fault current
⑥ Recommended setting range for upper fault current
⑦ Measuring range

Figure 9-4 Current limits for NAMUR configuration

The fail safe current output signal can be selected to:

- Lower fault current
- Upper fault current
- Last reliable value (the last process value before the failure occurred)
- Current value (actual measured value)
- Fail-safe value (within the range of 3.5 to 25 mA)

In the alarms lists in Diagnostics and corrective actions (Page 106) it is listed which alarms bring the output to fail safe current.

9.3.1.2 Positive normal scaling

Positive flow with negative scaling (example)

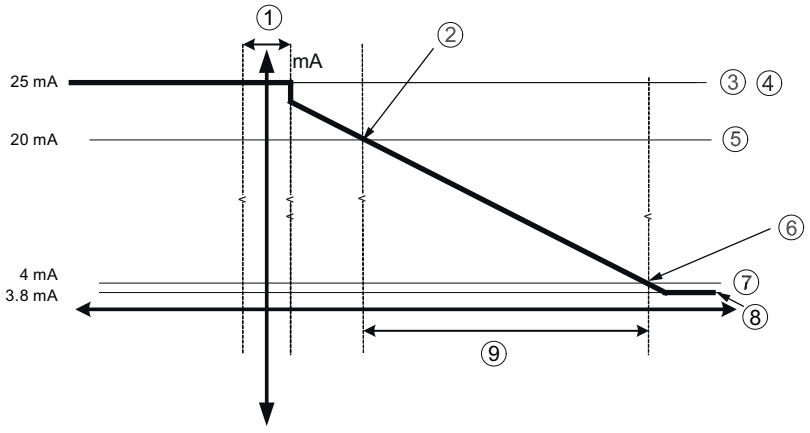

① Low flow cut-off
② Upper range value
③ Maximum output current
④ Upper alarm current
⑤ Upper range
⑥ Lower range value
⑦ Lower range
⑧ Minimum output current
⑨ Measurement range

Current output setting

- Process value = Volume flow
- Direction = Symmetric
- Loop current mode = 4 to 20 mA (maximum 25 mA)
- Fail-safe mode = Upper fault current

9.3.1.3 Positive across zero

Positive flow across zero with positive scaling (example)

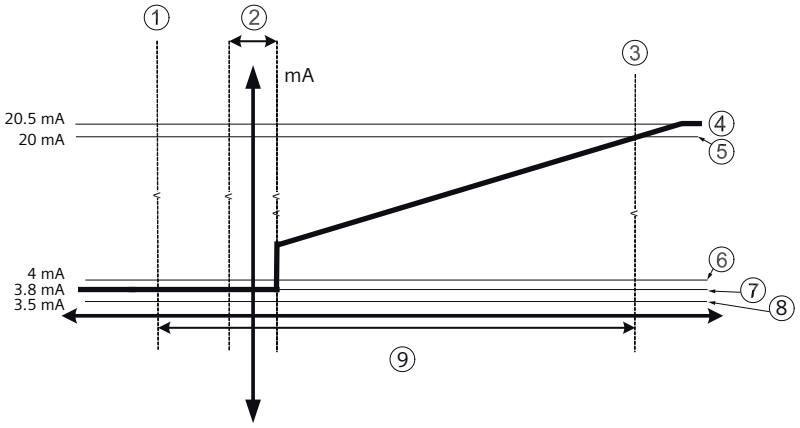

① Lower range value
② Low flow cut-off
③ Upper range value
④ Maximum measurement value
⑤ Upper range
⑥ Lower range
⑦ Minimum measurement value
⑧ Lower alarm value
⑨ Measurement range

Current output setting

- Process value = Volume flow
- Direction = Bidirectional
- Loop current mode = 4 to 20 mA NAMUR
- Fail-safe mode = Upper fault current

9.3.1.4 Bidirectional across zero

Bidirectional flow across zero with positive scaling

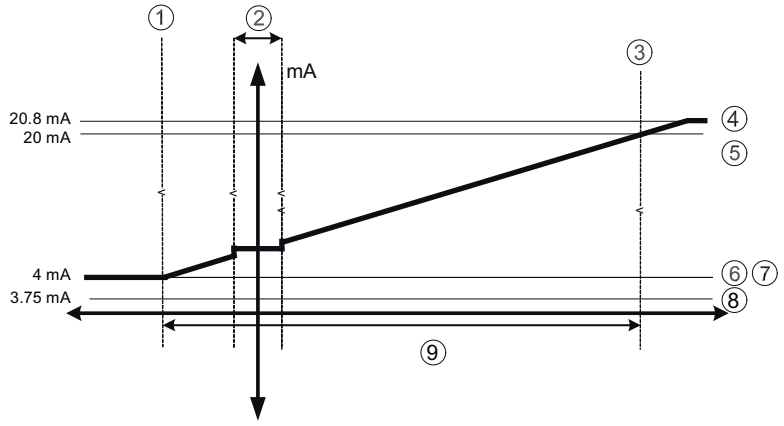

① Lower range value
② Low flow cut-off
③ Upper range value
④ Maximum measurement value
⑤ Upper range
⑥ Lower range
⑦ Minimum measurement value
⑧ Lower alarm value
⑨ Measurement range

Current output setting

- Process value = Volume flow
- Direction = Bidirectional
- Loop current mode = 4 to 20 mA US
- Fail-safe mode = Lower fault current

9.3.1.5 Bidirectional symmetrical

Bidirectional flow with symmetrical scaling (example)

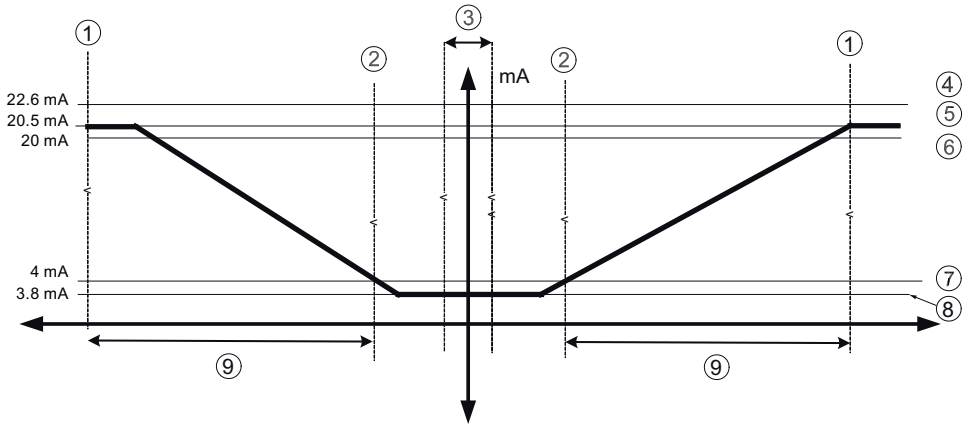

① Upper range value
② Lower range value
③ Low flow cut-off
④ Upper alarm value
⑤ Maximum measurement value
⑥ Upper range
⑦ Lower range
⑧ Minimum measurement value
⑨ Measurement range

Current output setting

- Process value = Volume flow
- Direction = Bidirectional (Symmetric)
- Loop current mode = 4 to 20 mA NAMUR
- Fail-safe mode = Upper fault current

9.3.2 Pulse output

The pulse output function supplies pulses equivalent to a configured amount of accumulated volume. The pulse width is configured and the pulse repetition is proportional to the selected flow rate.

9.3.2.1 Pulse repetition

Pulse repetition

Pulse repetition is calculated as follows:

$$\text{Pulse repetition} = \frac{\text{Amount per pulse}}{\text{Measured flow rate}}$$

FC0026.01

9.3.2.2 Examples pulse output

Note

Pulse width must be selected with the view that remaining time is always greater than pulse width at the highest measured flow.

Example

- Pulse output configuration (Digital output)
  - Operation mode = Pulse output
  - Process value = Volume flow
  - Amount = 1 m^3
  - Pulse width = 1 ms
- Measured volume flow value = 10 m^3/s (constant)

Result:

- Pulse repetition = 100 ms
- Output frequency = 10 pulses per second with a pulse width of 1 ms
- Remaining time between pulses is 99 ms

9.3.3 Frequency output

The frequency output function supplies a frequency (50% duty cycle) proportional to the selected process value.

9.3.3.1 Frequency calculation

Frequency is calculated as follows:

$$\text{Frequency} = \frac{\text{Measured volume flow}}{\text{Flow value high - Flow value low}} \times (\text{Frequency value high - Frequency value low})$$

9.3.3.2 Example frequency output

Example

This example shows how to calculate the output frequency for any measured flowrate:

Frequency output configuration:

- Operation mode = Frequency output (Digital output)
- Process value = Volume flow
- Flow direction = Positive
- Upper frequency value = 12000 Hz
- Lower frequency value = 2000 Hz
- Volume flow value high = 15 m^3/s
- Volume flow value low = 5 m^3/s

Measured volume flow value = 7.5 m^3/s (constant)

Result:

● Frequency = 7.5 kHz

Note

The connected equipment must be capable of registering the full range of frequencies configured.

9.3.4 Status output

9.3.4.1 Alarm status

Depending on the Alarm mode setting, multiple alarms can be signaled on the output and selected from the alarm class or the Individual alarms lists.

- Alarm class: Alarm will be signaled if alarm within the selected alarm class occurs.
- Individual alarms: Alarm will be signaled if selected Individual alarms occurs. It is possible to select multiple alarms to be signaled.

Note

Alarm class

The alarm class options depend on the Status signal mode, either NAMUR or SIMATIC PCS 7 (Siemens Standard), selected in menu item 3.2.6. Both NAMUR and Siemens Standard alarms and their messages are described in more detail in Diagnostics and corrective actions (Page 106).

Service and maintenance 10

10.1 Basic safety notes

10.1.1 Maintenance

The device is maintenance-free. However, a periodic inspection according to pertinent directives and regulations must be carried out.

An inspection can include:

- Ambient conditions
- Seal integrity of the process connections, cable entries, and cover
- Reliability of power supply, lightning protection, and grounds

NOTICE
Penetration of moisture into the device Damage to device. • Make sure when carrying out cleaning and maintenance work that no moisture penetrates the inside of the device.

10.2 Cleaning

Cleaning the enclosure

- Clean the outside of the enclosure with the inscriptions and the display window using a cloth moistened with water or a mild detergent.
- Do not use any aggressive cleansing agents or solvents, e.g. acetone. Plastic parts or the painted surface could be damaged. The inscriptions could become unreadable.

10.3 Maintenance and repair work

⚠ WARNING
Impermissible repair of the device • Repair must be carried out by Siemens authorized personnel only.

⚠ WARNING

Impermissible accessories and spare parts

- Only use original accessories or original spare parts.
- Observe all relevant installation and safety instructions described in the instructions for the device or enclosed with the accessory or spare part.

⚠ WARNING

Humid environment

Risk of electric shock.

- Avoid working on the device when it is energized.
- If working on an energized device is necessary, ensure that the environment is dry.
- Make sure when carrying out cleaning and maintenance work that no moisture penetrates the inside of the device.

⚠ WARNING

Improper connection after maintenance

- Connect the device correctly after maintenance.
- Close the device after maintenance work.

Refer to Connecting (Page 39).

⚠ CAUTION

Hot surfaces

Risk of burns during maintenance work on parts having surface temperatures exceeding 70 °C (158 °F).

- Take corresponding protective measures, for example, by wearing protective gloves.
- After carrying out maintenance, remount touch protection measures.

⚠ CAUTION

Hot parts in the device

Temperatures that can burn unprotected skin may be present for some time after the device has been switched off.

- Observe the waiting time specified in Technical specifications (Page 119) or on the device before starting with maintenance work.

CAUTION

Hazardous voltage at open device

Risk of electric shock when the enclosure is opened or enclosure parts are removed.

- Before you open the enclosure or remove enclosure parts, de-energize the device.
- If maintenance measures in an energized state are necessary, observe the particular precautionary measures. Have maintenance work carried out by qualified personnel.

10.3.1 Replacing the memory card

Before you start

- Read the Safety notes (Page 15)
- Read the Basic safety notes: Installing/mounting (Page 23)
- Read the Basic safety notes: Connecting (Page 39)

Replacing memory card

1. Disable data logging by selecting "NO" in the last step of the data logging wizard 3.7.5.
2. Isolate the device from power.
3. Unscrew the 4 mounting screws and remove the transmitter.

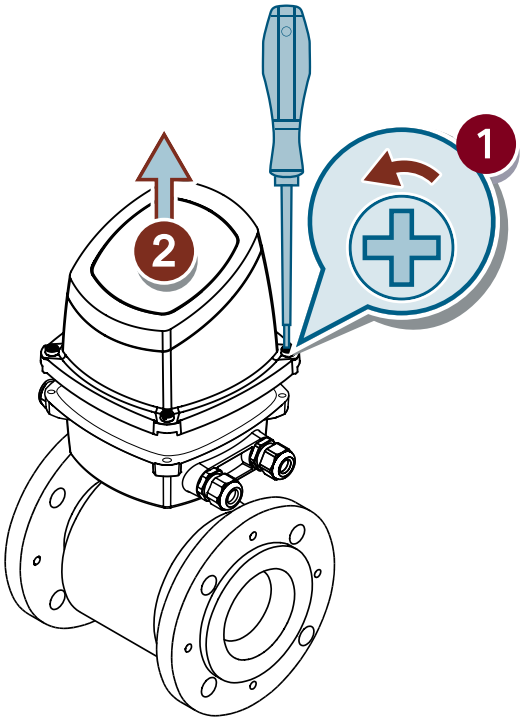

4. Gently push the 4 pins on the bottom side of the transmitter. Lift off the outer case.

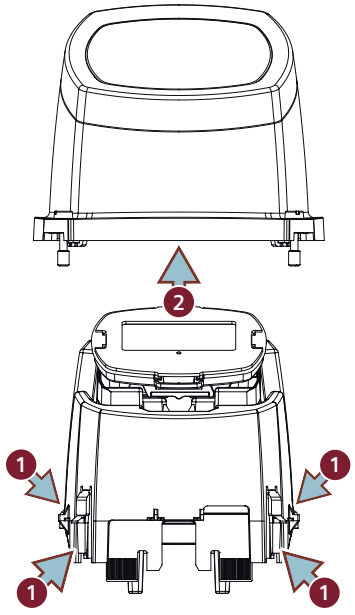

5. Remove the memory card by pressing and releasing it.
   Recommended: Insert the card, that was removed, into a PC and make a backup of all files.

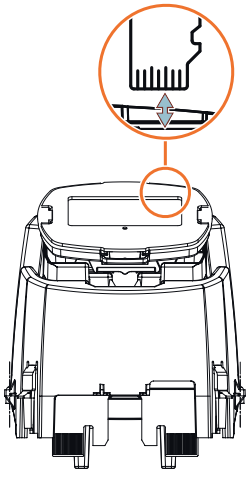

6. Insert the replacement memory card.
7. Put the transmitter back together in reverse order.

Note

Avoid pins breaking

Make sure that the 4 pins on the bottom side of the transmitter snap back into place and are not under permanent stress.

8. Mount the transmitter on the terminal box by cross tightening as indicated. To avoid damage to the device do not fully tighten right away.

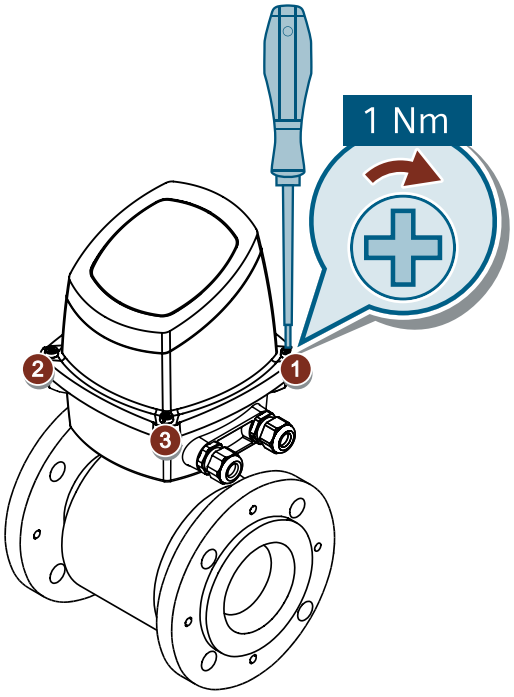

9. Reconnect power to the device.

Value for parameter "Installed" 3.7.1, will display "Yes" when memory card is installed properly.

Note

Diagnostic may result when replacing memory card

- If memory card is replaced with a blank card, no diagnostic is displayed.
- If memory card is replaced with a card from another device, diagnostic ID 151 displays. This diagnostic is a notice that configurations can be copied from one device to another without overwriting data. When the memory card is once again inserted into the original device, the data is unchanged, and the memory card works with the original device.

10.3.2 Performing a firmware update

Before you start

- Read the Safety notes (Page 15)
- Read the Basic safety notes: Installing/mounting (Page 23)
- Read the Basic safety notes: Connecting (Page 39)

Performing a firmware update

1. Download a firmware bundle from SIOS (https://www.siemens.com/processinstrumentation/downloads).
2. Remove the memory card (Page 97).
3. Connect the memory card to your computer and copy the firmware bundle to the root folder.
4. Safely remove the memory card from your computer.
5. Install the memory card (Page 37).
6. Log in as "Expert" (Page 60).
7. Go to wizard 3.13 "Firmware update" and select the dowloaded firmware bundle.

   Note
   Device will restart
   During the update process the device will restart and thereafter resume with the update.

8. Wait for confirmation message that the firmware was updated successfully.

10.4 Ordering of spare parts

Condition

- You have a Siemens Industry Mall account.

Procedure

1. Open the PIA Life Cycle Portal (https://www.pia-portal.automation.siemens.com).
2. Select the desired language.
3. To find spare parts for your device, do one of the following:
   - Enter the complete order number of your device (e.g. 7ME4633-4KA51-8DC3-Z A05+B11+E06+F11) into the "Product number" field and click "Go".
   - Enter the serial number of your device (e.g. N1KXXXXXXX) in the "Serial number" field and click "Go".
   - If you do not know the product or serial number, search for your device under "Product family".

4. Navigate to the "Spare parts" tab.
   You see the list of spare parts available for your device.

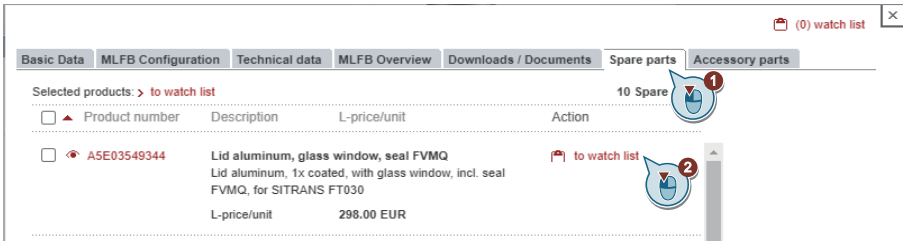

5. Select a spare part and add it to your watch list.
   The watch list opens.
6. Click "Add to cart of Industry Mall".



The Siemens Industry Mall opens and you can order your spare part.

10.5 Replacing the device

CAUTION

Corrosive substances

Risk of chemical burns when replacing the sensor.

The sensor in the device contains corrosive substances that result in burns on unprotected skin.

- Make sure that the sensor enclosure is not damaged when replacing the sensor.
- If contact with the corrosive substances occurs, rinse the affected skin immediately with large amount of water to dilute substance.

10.6 Return procedure

To return a product to Siemens, see Returns to Siemens (www.siemens.com/returns-to-siemens).

Contact your Siemens representative to clarify if a product is repairable, and how to return it. They can also help with quick repair processing, a repair cost estimate, or a repair report/ cause of failure report.

NOTICE
Decontamination The product may have to be decontaminated before it is returned. Your Siemens contact person will let you know for which products this is required.

See also

Decontamination declaration (https://www.siemens.com/sc/declarationofdecontamination)

Return goods delivery note (https://www.siemens.com/processinstrumentation/returngoodsnote)

10.7 Disposal

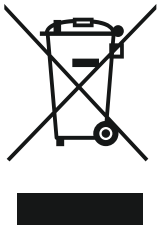

Devices described in this manual should be recycled. They may not be disposed of in the municipal waste disposal services according to the Directive 2012/19/EC on waste electronic and electrical equipment (WEEE).

Devices can be returned to the supplier within the EC and UK, or to a locally approved disposal service for eco-friendly recycling. Observe the specific regulations valid in your country.

Further information about devices containing batteries can be found at: Information about battery / product return (WEEE) (https://support.industry.siemens.com/cs/document/109479891/)

Note

Special disposal required

The device includes components that require special disposal.

- Dispose of the device properly and environmentally through a local waste disposal contractor.

Diagnostics and troubleshooting 11

11.1 Device status symbols (Graphical display)

Device status is shown using symbols and text on the local display. Additionally, the symbol and respective text message for each device status can be seen in remote engineering, asset management or process control systems.

Messages are shown on the display.

- In the operation view, alarms are shown as a combination of symbol and text in the lower line of the display. If several diagnostic messages are active at the same time, the most critical is shown.
- In the alarm list view all active alarms are shown as a list. The alarm list combines a symbol, text and an alarm ID number. The alarms are arranged according to the alarm ID numbers. The alarm list view can also be accessed via parameter "Device status" (menu item 3.2.1).
- In the alarm history view the most recent alarms (up to 100) are listed. The alarm history log can be viewed in parameter "Diagnostic log" (menu item 3.2.2). The alarm history log can be reset in parameter "Clear diagnostic log" (menu item 3.2.3).

Device status characteristics

The following table provides possible cause of device status, and actions for the user or service.

The device provides two types of alarm formats; symbols used on the local display are based on NAMUR status signals or SIMATIC PCS7 (Siemens standard) alarm classes, selected in parameter "Status signal mode" (menu item 3.2.6).

In SIMATIC PDM, symbols are based on Siemens standard alarm classes.

11.2 Device status symbols (chart)

Device status symbols

Local display or web server - NAMUR NE 107			**Local display - Siemens standard**			**SIMATIC PDM/PLC**			
Symbol	**Device status**	**Priority ***	**Symbol**	**Device status**	**Priority ****	**Symbol**		**Device status**	**Priority ****
	Failure	1		Maintenance alarm	1			Maintenance alarm	1
Cause: Output signal invalid due to fault in the field device or in the peripherals. **Action:** Maintenance is required immediately.									

Local display or web server - NAMUR NE 107			Local display - Siemens standard			SIMATIC PDM/PLC			
Symbol	**Device status**	**Priority ***	**Symbol**	**Device status**	**Priority ****	**Symbol**		**Device status**	**Priority ****
	Maintenance required	3		Maintenance demanded	2			Maintenance demanded	2
Cause: Output signal is still valid, but wear reserve is almost exhausted and/or a function will be limited soon. **Action:** Maintenance is strongly recommended as soon as possible.									
	Maintenance required	3		Maintenance required	3			Maintenance required	3
Cause: Output signal is still valid. No functional restriction detected but end of wear reserve expected in next weeks. **Action:** Maintenance of device should be planned.									
	Function check	2		Simulation or substitute value	5			Simulation or substitute value	5
Cause: Output signal temporarily does not represent the process because output based on a simulation value. **Action**: Disable simulation mode via HMI or engineering system or restart device.									
	Out of specification	4		Process value alarm	8			Process value alarm	8
Cause: Deviations from permissible ambient or process conditions detected by the device (through self-monitoring, or warnings / faults in the device) indicate that the measured value is unreliable or deviations from the set value in the actuators is most likely greater than anticipated under normal operating conditions. Process or ambient conditions will damage the device or result in unreliable output. **Action:** Check ambient temperature or process conditions. If possible, install device at different location.									
	Out of specification	4		Process value warning	10			Process value warning	10
Cause: Deviations from permissible ambient or process conditions detected by the device (through self-monitoring, or warnings / faults in the device) indicate that the measured value is unreliable or deviations from the set value in the actuators is most likely greater than anticipated under normal operating conditions. Process or ambient conditions can damage the device or result in unreliable output. **Action:** Check ambient temperature or process conditions. If possible, install device at different location.									
no symbol shown	Good - OK		no symbol shown	no assignment	13		no symbol shown	no assignment	13
Cause: Device status ok. No active diagnostic errors. **Action:** No action required.									

* Lowest priority number equals highest fault severity.

** Both the Siemens standard symbol and its corresponding Namur symbol (from device display) will be shown in SIMATIC PDM.

11.3 Device information symbols (chart)

Information symbols

The following information symbols are also used on the local display and in SIMATIC PDM.

Local display	**SIMATIC PDM/PLC**	
Symbol	**Symbol**	**Description**
		Data exchange via fieldbus Device is communicating.
	Not applicable	Custody transfer enabled
		Memory card Capacity is 25 % used.
		Memory card Capacity is 50 % used.
		Memory card Capacity is 75 % used.
		Memory card Capacity is 100 % used.
		Cyclic communication enabled

11.4 Diagnostics and corrective actions

Sensor diagnostics

ID	Symbols	Source	Cause/Action
0		Sensor startup	Sensor startup. Wait until the startup is finished. The startup time can take up to 30 seconds.
1		Internal error in transmitter	Internal electronics or software error. Restart or power the device off and on. If the problem persists, contact Technical Support.
2		Flow measurement error	Possible electronics damage. Restart or power the device off and on. If the problem persists, contact Technical Support.
3		Insulation test running	Wait until the insulation test is completed. If periodic insulation tests are enabled, this diagnostic will appear every time the automatic insulation test is running. While the insulation test is running, the flow measurement stops.
4		Coil insulation error	During the insulation test, an insulation error was detected between coils and electrodes. Check connections. Check if air is present in the medium and that the device is operated within its specifications. Disable insulation measurement (2.1.6.1.1), manually perform a new insulation selftest (3.10.3). If the problem persists, contact Technical Support.
5		Electrical conductivity too low	Conductivity of medium is too low. Flow measurement cannot be performed accurately. Check that the device is operated within its specifications. Check installation for abnormal operating conditions. Check process conditions.
6		Configuration error	Reset to factory settings failed. Restart the device. Reset to factory settings. If the problem persists, contact Technical Support.
8		Coils current error	Coils current stabilization takes too long. Decrease the excitation frequency. Check excitation settings. Check connections. If the problem persists, contact Technical Support.

ID	Symbols	Source	Cause/Action
9		Coil cables error	Coil cables disconnected or broken. Check connections. Check cabling.
10		Excitation circuit error	Short circuit detected in excitation circuit. Restart or power the device off and on. If the problem persists, contact Technical Support.
11		Electrode error	Possible electrode wear, insulation error or electromagnetic interferences. Check the grounding and shielding. Check installation for abnormal operating conditions. If the problem persists, contact Technical Support.
12		Electrode cable short circuit	Electrode impedance too low. Possible electrode cable damage or medium conductivity too high. Check connections. Check cabling. Check process conditions.
13		Internal memory error	Internal memory user data corruption detected. Restart or power the device off and on. The corrupted parameters will be restored to their ordered default value. If the problem persists, contact Technical Support.
14		SENSORPROM user data error	User data in internal memory corrupted. Restart or power the device off and on. The corrupted parameters will be restored to their ordered default value. If the problem persists, contact Technical Support.
15		Coil resistance out of specification	Possible sensor damage or medium temperature too high. Check connections and cabling. Check process conditions. If the problem persists, contact Technical Support.
16		SENSORPROM parameter error	Parameter incompatible with current firmware. Restart or power the device off and on. If the problem persists, contact Technical Support.
17		SENSORPROM format error	Format incompatible. SENSORPROM is not recognized by current firmware. Contact Technical Support.
18		SENSORPROM calibration data error	Calibration data corrupted. Device cannot be operated without loss of accuracy. Contact Technical Support.

ID	Symbols	Source	Cause/Action
19		SENSORPROM not plugged	SENSORPROM not plugged or power supply defective. Check connections. Replace components. If the problem persists, replace the components or contact Technical Support.
20		Empty pipe detected	Electrodes impedance too high. Check if air is present in the medium and that the device is operated within its specifications. Check installation for abnormal operating conditions. Check process conditions.
21		Noise level measurement running	The noise level measurement is running. During this selftest the flow measurement stops. Stop the noise level measurement selftest.
22		Fingerprint deviation	Coils current stabilization time has deviated too much from sensor fingerprint reference. Possible sensor damage. A replacement of sensor is recommended. Contact Technical Support.
24		Noise level too high	Flow signal is not stable. Check the grounding and shielding. Check process conditions. If the problem persists, contact Technical Support.

Transmitter diagnostics

ID	Symbols	Source	Cause/Action
100		Volume flow above alarm limit	Volume flow above alarm limit. Check process conditions. Adjust the parameter value "Upper alarm limit" to normal process conditions.
101		Volume flow above warning limit	Volume flow above warning limit. Check process conditions. Adjust the parameter value "Upper warning limit" to normal process conditions.
102		Volume flow below warning limit	Volume flow below warning limit. Check process conditions. Adjust the parameter value "Lower warning limit" to normal process conditions.

ID	Symbols	Source	Cause/Action
103		Volume flow below alarm limit	Volume flow below alarm limit. Check process conditions. Adjust the parameter value "Lower alarm limit" to normal process conditions.
136		Totalizer 1 above alarm limit	Totalizer 1 above alarm limit. Check process conditions. Adjust the parameter value "Upper alarm limit" to normal process conditions.
137		Totalizer 1 above warning limit	Totalizer 1 above warning limit. Check process conditions. Adjust the parameter value "Upper warning limit" to normal process conditions.
138		Totalizer 1 below warning limit	Totalizer 1 below warning limit. Check process conditions. Adjust the parameter value "Lower warning limit" to normal process conditions.
139		Totalizer 1 below alarm limit	Totalizer 1 below alarm limit. Check process conditions. Adjust the parameter value "Lower alarm limit" to normal process conditions.
140		Totalizer 2 above alarm limit	Totalizer 2 above alarm limit. Check process conditions. Adjust the parameter value "Upper alarm limit" to normal process conditions.
141		Totalizer 2 above warning limit	Totalizer 2 above warning limit. Check process conditions. Adjust the parameter value "Upper warning limit" to normal process conditions.
142		Totalizer 2 below warning limit	Totalizer 2 below warning limit. Check process conditions. Adjust the parameter value "Lower warning limit" to normal process conditions.
143		Totalizer 2 below alarm limit	Totalizer 2 below alarm limit. Check process conditions. Adjust the parameter value "Lower alarm limit" to normal process conditions.

ID	Symbols	Source	Cause/Action
144		Totalizer 3 above alarm limit	Totalizer 3 above alarm limit. Check process conditions. Adjust the parameter value "Upper alarm limit" to normal process conditions.
145		Totalizer 3 above warning limit	Totalizer 3 above warning limit. Check process conditions. Adjust the parameter value "Upper warning limit" to normal process conditions.
146		Totalizer 3 below warning limit	Totalizer 3 below warning limit. Check process conditions. Adjust the parameter value "Lower warning limit" to normal process conditions.
147		Totalizer 3 below alarm limit	Totalizer 3 below alarm limit. Check process conditions. Adjust the parameter value "Lower alarm limit" to normal process conditions.
148		Transmitter electronics temperature too high	Transmitter electronics temperature too high. Decrease the ambient temperature. If possible, reposition the device in a different location. Inspect the device for heat-related damages.
149		Transmitter electronics temperature too low	Transmitter electronics temperature too low. Increase the ambient temperature. If possible, reposition the device in a different location. Inspect the device for cold-related damages.
150		Sensor signal disrupted	Internal error. Restart the device. If the problem persists, contact Technical Support.
151		SensorFlash parameter backup disabled	SensorFlash parameter backup disabled. A SensorFlash of another device has been inserted. Copy the settings from this SensorFlash to the device or insert the original SensorFlash.
152		SensorFlash parameter backup disabled	SensorFlash parameter backup disabled. A SensorFlash of another device has been inserted. Copy the settings from this SensorFlash to the device or insert the original SensorFlash.

ID	Symbols	Source	Cause/Action
153		CH1 loop current in lower saturation	Loop current in lower saturation. The process value is so low that the loop current reaches the lower saturation limit and cannot decrease any further. Check process conditions. Adjust parameter value "Lower range value".
154		CH1 loop current in upper saturation	Loop current in upper saturation. The process value is so high that the loop current reaches the upper saturation limit and cannot increase any further. Check process conditions. Adjust parameter value "Upper range value".
155		CH1 loop current error	Loop current error. Invalid loop current deviation detected. Check current output cable connection. Passive operation: check external power supply.
158		CH1 cable break[1)]	Cable break. Check current output cable connection. Passive operation: check external power supply.
159		Internal error	Internal error in transmitter. Restart the device. If the problem persists, replace the component.
161		Volume flow simulated	Volume flow simulated. Disable the simulation to return to normal operation.
167		Totalizer 1 simulated	Totalizer 1 simulated. Disable the simulation to return to normal operation.
168		Totalizer 2 simulated	Totalizer 2 simulated. Disable the simulation to return to normal operation.
169		Totalizer 3 simulated	Totalizer 3 simulated. Disable the simulation to return to normal operation.

ID	Symbols	Source	Cause/Action
170		Loop current simulated	Loop current simulated. Disable the simulation to return to normal operation.
172		Transmitter firmware incompatible	Transmitter firmware incompatible. The component does not have the expected firmware version. Update the product firmware or replace the component.
173		Sensor firmware incompatible	Sensor firmware incompatible. The component does not have the expected firmware version. Update the product firmware or replace the component.
177		Startup	Device startup. Wait until the startup is finished. The startup time is specified in the operating instructions. If the diagnostic persists after the specified startup time, restart the device. If the problem persists, contact Technical Support.
178		Transmitter firmware incompatible	Transmitter firmware incompatible. The component does not have the expected firmware version. Update the product firmware or replace the component.
179	Symbols depending on simulation	Alarm class simulated	Status signals simulated. Disable the simulation to return to normal operation.
180		Internal error in transmitter	Internal error in transmitter. Restart the device. If the problem persists, replace the component.
181		SensorFlash error	SensorFlash error. Replace the SensorFlash.
182		Transmitter firmware incompatible	Transmitter firmware incompatible. The component does not have the expected firmware version. Update the product firmware or replace the component.

ID	Symbols	Source	Cause/Action
195		CH2 loop current in lower saturation	Loop current in lower saturation. The process value is so low that the loop current reaches the lower saturation limit and cannot decrease any further. Check process conditions. Adjust parameter value "Lower range value".
196		CH2 loop current in upper saturation	Loop current in upper saturation. The process value is so high that the loop current reaches the upper saturation limit and cannot increase any further. Check process conditions. Adjust parameter value "Upper range value".
197		CH2 cable break[1)]	Cable break. Check current output cable connection. Passive operation: check external power supply.
204		CH3 output frequency too low	Output frequency too low. The process value is below the parameter "Lower range value". The output frequency cannot decrease any further. Check process conditions. Adjust parameter value "Lower range value".
205		CH3 output frequency too high	Output frequency too high. The process value is above the parameter "Upper range value". The output frequency cannot increase any further. Check process conditions. Adjust parameter value "Upper range value".
206		CH3 pulse overflow	Output pulses buffered. Flow too high for the pulse output settings. Check process conditions. Increase the parameter value "Amount", or reduce the parameter value "Pulses per amount" or "Pulse width".
214		CH2 simulated	Current output simulated. Disable the simulation to return to normal operation.
215		CH3 simulated	Digital output simulated. Disable the simulation to return to normal operation.
216		CH4 simulated	Relay output simulated. Disable the simulation to return to normal operation.

ID	Symbols	Source	Cause/Action
217		Process values frozen	Process values frozen. Freezing of the process values is enabled either via a digital input or the fieldbus. Disable the freezing of the process values to return to normal operation.
218		Output channels forced	Output channels forced. Forcing is enabled either via a digital input or the fieldbus. Disable forcing to return to normal operation.
232		Flow velocity above alarm limt	Flow velocity above alarm limit. Check process conditions. Adjust the parameter value "Upper alarm limit" to normal process conditions.
233		Flow velocity above warning limit	Flow velocity above warning limit. Check process conditions. Adjust the parameter value "Upper warning limit" to normal process conditions.
234		Flow velocity below warning limit	Flow velocity below warning limit. Check process conditions. Adjust the parameter value "Lower warning limit" to normal process conditions.
235		Flow velocity below alarm limit	Flow velocity below alarm limit. Check process conditions. Adjust the parameter value "Lower alarm limit" to normal process conditions.
280		Electrical conductivity above alarm limit	Electrical conductivity above alarm limit. Check process conditions. Adjust the parameter value "Upper alarm limit" to normal process conditions.
281		Electrical conductivity above warning limit	Electrical conductivity above warning limit. Check process conditions. Adjust the parameter value "Upper warning limit" to normal process conditions.
282		Electrical conductivity below warning limit	Electrical conductivity below warning limit. Check process conditions. Adjust the parameter value "Lower warning limit" to normal process conditions.

ID	Symbols	Source	Cause/Action
283		Electrical conductivity below alarm limit	Electrical conductivity below alarm limit. Check process conditions. Adjust the parameter value "Lower alarm limit" to normal process conditions.
285		Data logging 30 days left	Data logging, < 30 days remaining. Low available memory, which is full in 30 days at the latest. Move data logs from the SensorFlash to an alternate storage location to free up memory space. Increase the parameter value "Logging interval".
286		Data logging 7 days left	Data logging, < 7 days remaining. Low available memory, which is full in 7 days at the latest. Move data logs from the SensorFlash to an alternate storage location to free up memory space. Increase the parameter value "Logging interval".
287		Data logging SD card full	Data logging memory full. Move data logs from the SensorFlash to an alternate storage location to free up memory space.
290		Flow velocity simulated	Flow velocity simulated. Disable the simulation to return to normal operation.
314		Electrical conductivity simulated	Electrical conductivity simulated. Disable the simulation to return to normal operation.
396		Schedule timer 1 maintenance required	Maintenance required. Maintenance of device should be planned.
397		Schedule timer 1 maintenance demanded	Maintenance demanded. Maintenance of device should be planned.
398		Schedule timer 2 maintenance required	Maintenance required. Maintenance of device should be planned.
399		Schedule timer 2 maintenance demanded	Maintenance demanded. Maintenance of device should be planned.

ID	Symbols	Source	Cause/Action
400		Schedule timer 3 maintenance required	Maintenance required. Maintenance of device should be planned.
401		Schedule timer 3 maintenance demanded	Maintenance demanded. Maintenance of device should be planned.
405		Duplicated static IP address	IP address conflict. The static IP address is already used in the network. Set a free address.
406		Duplicated DHCP IP address	IP address conflict. The IP address assigned by the DHCP server is already in use on the network. Check the settings of the DHCP server and the correctness of the static IP addresses of other network participants.
407		Fallback network settings applied	DHCP error. Device uses fallback network settings. Check the connection to the DHCP server and its settings.
408		Duplicated fallback IP address	DHCP error. Check the connection to the DHCP server and its settings. An address conflict prevents the use of the fallback IP address. Check the connection to the DHCP server and its settings. An address conflict prevents the use of the fallback IP address.
409		NTP server not available	Clock time not synchronized. Check the connection to the NTP server and its settings.
410		Current output (HART)	Configuration error. The configured fault current is within the measurement range. Correct settings.
411		Current output	Configuration error. The configured fault current is within the measurement range. Correct settings.
414		SENSORPROM malfunction	SENSORPROM error. Make sure that the SENSORPROM is plugged in correctly.

ID	Symbols	Source	Cause/Action
415	-	Fieldbus	Simulation enabled. Disable the simulation to return to normal operation.
416		Output frequency too low	Output frequency too low. The process value is below the parameter "Lower range value". The output frequency cannot decrease any further. Check process conditions. Adjust parameter value "Lower range value".
417		Output frequency too high	Output frequency too high. The process value is above the parameter "Upper range value". The output frequency cannot increase any further. Check process conditions. Adjust parameter value "Upper range value".
418		Digital output 2	Output pulses buffered. Flow too high for the pulse output settings. Check process conditions. Increase the parameter value "Amount", or reduce the parameter value "Pulses per amount" or "Pulse width".
419		Digital output simulated	Disable the simulation to return to normal operation.

[1] If parameter "Loop current scale" is set to "0...20 mA" and parameter "Fail-safe behavior" is set to "Upper fault current" and the cable breaks, this alarm appears intermittently.

Technical specifications

12

12.1 Technical specifications

Technical specifications for FMT020		
Mode of operation and design	Measuring principle	Electromagnetic with pulsed constant field
	Empty pipe	Detection of empty pipe (special cable required in remote mounted installation)
	Excitation frequency	Depends on sensor size
	Electrode input impedance	
Analog output	**Current output (active/passive)**	
	Signal range	0...24 mA
	Analog output active	24 V DC (powered from transmitter)
	Analog output passive	12...30 V DC (powered from connected supply directly on terminals AO_- and AO_C)
	Load	< 470 Ω
	Time constant	0.1...100 s, adjustable
Digital output	**Digital output (active/passive)**	
	Frequency	0...12.5 kHz, 50% duty cycle
	Pulse (active)	24 V DC, 30 mA, 1 kΩ ≤ R_i ≤10 kΩ, short-circuit protected (powered from transmitter)[1]
	Pulse (passive)	3...30 V DC, max. 110 mA, 200 Ω ≤ R_i ≤10 kΩ (powered from connected supply)
	Time constant	0.1...100 s, adjustable
Relay output	**Relay output**	
	Type	SPDT Form C relay Potential-free change-over contacts, resistive load
	Time constant	same as current analog output
	Load	42 V AC/2 A, 24 V DC/1 A
Galvanic isolation	All inputs and outputs are galvanically isolated	
Max. measuring error	Sensor dependant	Refer to FMS500 Operating Instructions **(**A5E52677520**)**
Display and keypad	Totalizer	3 fourteen-digit counters for forward, net or reverse flow
	Display	full graphical 240x160 with backlight
	Keypad	4 capacitive buttons
	Time constant	0...100 s
Design	Enclosure material	PolyCarbonate (PC)
	Dimensions	See Dimension drawings (Page 123)
	Weight	1.0 kg (2.2 lbs)

Technical specifications for FMT020		
Cable	Cable insulator diameter	9...12 mm for power supply 6...12 mm for communication cable
	Conductor cross section	AWG24 to AWG12
Communication	Optional communication modules HART (4-20 mA active/passive) / PN / EIP / Modbus RTU	

[1] R < 1 kΩ may be required - depending on cables/input resistance

12.2 Certificates and approvals

SITRANS FMT020		
Configuration	FMT020 compact with FMS500 sensor (FM520)	FMT020 remote
	• Drinking water UL NSF 61 (USA), Belgaqua (Belgium), ACS (France), GB/T 5750 (China), WRAS (UK), AS/NZS4020 (Australia/New-Zealand), W270 (Germany) • Pressure Equipment PED Module H according to 2014/68/EU PESR Module H according to SI 2016 No1105	• Ordinary Location / General SafetyUL File E344532 according UL61010-1 and CAN/CSA C22.2 No 61010-1

12.3 Power

Table 12-1 Power supply

Description	**Specification**
Supply voltage	• 100 to 240 V AC, 50 to 60 Hz, 25 VA • 24 V DC ±20 %, 12 W
Power consumption	• AC version: 6.24 W • DC version: 6.45 W
Environmental conditions:	• Transient over voltages up to the levels of overvoltage category II • Temporary over voltages occurring on mains supply only • Mains AC supply voltage fluctuations up to ±10 % of the nominal voltage. • Altitude up to 2000 m
Reverse polarity protection	Yes, for DC power supply
Galvanic isolation	1500 V AC

12.4 Outputs

Table 12-2 Current output (HART)

Description	Current output	
Signal range	4 to 20 mA	
Resolution	0.4 µA	
Load	• Non-Ex: <770 Ω (HART ≥ 230 Ω)	
Time constant (adjustable)	0.0 to 100 s	
Fault current	4 - 20 NAMUR	4 - 20 US
Measurement range (mA)	3.8 - 20.5	4.0 - 20.8
Lower fault current (mA)	3.5	3.75
Upper fault current (mA)	22.6	22.6
Customized fail-safe mode	• Last valid value • Lower fault current • Upper fault current • Fail-safe value • Current value	
Galvanic isolation	All inputs and outputs are galvanically isolated PELV circuits with 60 V DC isolation from each other and ground. Maximum test voltage: 500 V AC	
Cable[1]	Standard industrial signal cable with up to 3 twisted pairs with overall screen can be connected between the transmitter and the control system. Individual pair or overall screen is optional depending on user requirements.	
Voltage range	Max. 24 V DC (active) 14 to 30 V DC (passive)	

[1] User supplied cables must be suitable for 5 °C above surrounding ambient temperature.

12.5 Operating conditions

Table 12-3 Basic conditions

Description		Specification FMT020
Ambient temperature (°C[°F]) (Humidity max. 98%)[1]	Operation in non hazardous area:	-40 ... +65 [-40 ... +149] for remote installation only -20 ... +60 [-4 ... +140] for compact installation
	Storage:	-40 ... +70 [-40 ... +158]
Degree of protection		IP66/67 NEMA type 4X/6
EMC performance		EN61326-1
Mechanical load		• IEC 60068-2-64 • IEC 60068-2-6 • IEC 60068-2-27 • IEC 60068-2-31

[1] Observe the most restrictive permissible ambient temperature of the transmitter and sensor.

Table 12-4 Environmental & safety conditions

Description		**Specification FMT020**
Location		Indoor use
Installation (overvoltage) category		II (complies with installation conditions according to IEC 61010-1)
Altitude		up to 2000 m
Maximum relative humidity	up to 31 °C (88 °F): from 31 °C (88 °F) to 40 °C (104 °F):	80% decreasing linearly to 50%
Pollution degree		2

Dimension drawings

13

13.1 Transmitter dimensions

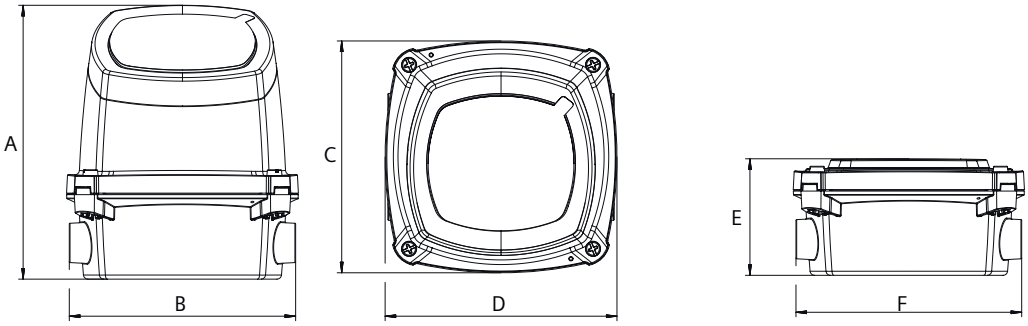

Figure 13-1 Transmitter dimensions

	A	B	C	D	E	F
mm	181	150	154	154	77	150
inch	7.13	5.91	6.06	6.06	3.03	5.91

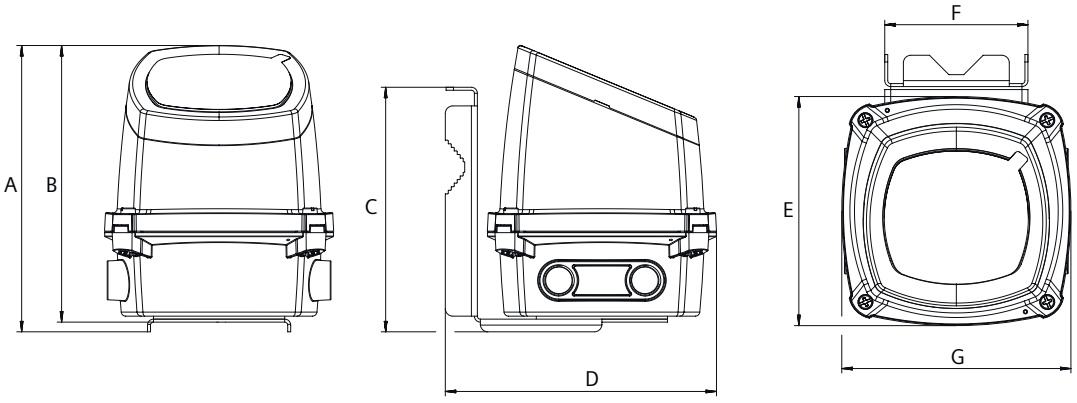

Figure 13-2 Transmitter dimensions wall mounting unit

	A	B	C	D	E	F	G
mm	192	185	164	182	154	96	154
inch	7.56	7.28	6.46	7.17	6.06	3.78	6.06

Note

Drill size for wall mounting

∅ Drill size 8 - 12 mm (0.315 - 0.472 inches)

Product documentation and support

A

A.1 Product documentation

Process instrumentation product documentation is available in the following formats:

- Certificates (http://www.siemens.com/processinstrumentation/certificates)
- Downloads (firmware, EDDs, software) (http://www.siemens.com/processinstrumentation/downloads)
- Catalog and catalog sheets (http://www.siemens.com/processinstrumentation/catalogs)
- Manuals (http://www.siemens.com/processinstrumentation/documentation)
  You have the option to show, open, save, or configure the manual.
  - "Display": Open the manual in HTML5 format
  - "Configure": Register and configure the documentation specific to your plant
  - "Download": Open or save the manual in PDF format
  - "Download as html5, only PC": Open or save the manual in the HTML5 view on your PC

You can also find manuals with the Mobile app at Industry Online Support (https://support.industry.siemens.com/cs/ww/en/sc/2067). Download the app to your mobile device and scan the device QR code.

Product documentation by serial number

Using the PIA Life Cycle Portal, you can access the serial number-specific product information including technical specifications, spare parts, calibration data, or factory certificates.

Entering a serial number

1. Open the PIA Life Cycle Portal (https://www.pia-portal.automation.siemens.com).
2. Select the desired language.
3. Enter the serial number of your device. The product documentation relevant for your device is displayed and can be downloaded.

To display factory certificates, if available, log in to the PIA Life Cycle Portal using your login or register.

Scanning a QR code

1. Scan the QR code on your device with a mobile device.
2. Click "PIA Portal".

To display factory certificates, if available, log in to the PIA Life Cycle Portal using your login or register.

A.2 Technical support

Technical support

If this documentation does not completely answer your technical questions, you can enter a Support Request (http://www.siemens.com/automation/support-request).

For help creating a support request, view this video here (www.siemens.com/opensr).

Additional information on our technical support can be found at Technical Support (http://www.siemens.com/automation/csi/service).

Service & support on the Internet

In addition to our technical support, Siemens offers comprehensive online services at service & support (http://www.siemens.com/automation/service&support).

Contact

If you have further questions about the device, contact your local Siemens representative, by doing the following:

1. Visit Contact at Siemens (http://www.automation.siemens.com/partner).
2. Select "All Products and Branches" > "Products & Services" > "Industrial automation".
3. Choose either "Process analytics" or "Process instrumentation", depending on your product.
4. Select the product category ("Pressure measurement", for example), then select your product.
5. Click "Search".
   The contacts for your product in all regions display.

Contact address for business unit:
Siemens AG
Digital Industries
Process Automation
Östliche Rheinbrückenstr. 50
76187 Karlsruhe, Germany

Communication

B

B.1 HART

Highway Addressable Remote Transducer, HART, is an industrial protocol. The HART protocol is an open standard. Full details about HART can be obtained from the HART communication website (https://fieldcommgroup.org/technologies/hart).

The device can be configured over the HART network using either a Field Communicator or a software package. The recommended software package is the SIMATIC Process Device Manager (PDM) by Siemens. Use HART Device Description (EDD) to integrate HART devices in engineering systems as SIMATIC PDM and AMS.

HART Communicator menu structures are available in HART Communication Foundation (https://fieldcommgroup.org/technologies/hart).

B.1.1 Mode of operation HART function

Note

Priority of operation and failure of power supply

- Operation at the device has priority over specifications from the HART communicator.
- Failure of the auxiliary power to the positioner also interrupts communications.

Function

The device is also available with HART functionality. The HART protocol allows you to communicate with your device using a HART communicator, PC, or programming unit. You can do the following with your device:

- Convenient configuration
- Store configurations
- Call up diagnostic data
- Show online measured values

Communication takes place as frequency modulation on the existing signal lines for the setpoint of 4 to 20 mA.

The device is integrated into the following parameter assignment tools:

- HART communicator
- PDM (Process Device Manager)
- AMS (Asset Management System)

B.1.2 System integration

Communication is via the HART protocol, using:

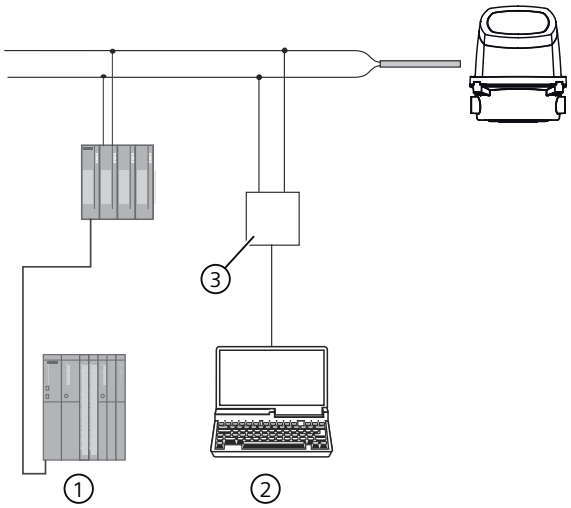

① SIMATIC PLC system with HART interface
② PC with SIMATIC PDM or similar application
③ HART modem

Figure B-1 System integration example

The flowmeter can be used in a number of system configurations to enable simple, secure, and reliable data transmission over long distances.

System communication

Table B-1 HART protocol identification data

Manufacturer ID	42 (2A Hex)	Manufacturer ID parameter
Device type	44 (2C Hex)	Device type parameter
HART protocol revision	7.6	HART protocol revision parameter
Device revision	1	Device revision parameter

Note: Version numbers and other references shown above are typical or example values.

Device description files

Available EDD drivers:

- SIMATIC PDM
- FDT/DTM
- AMS suite
- 375 Field Communicator

The drivers can be downloaded here:

Download EDD files (http://www.siemens.com/flowdocumentation)

Mapping of measured process variables

The device supports all four dynamic variables (PV, SV, TV and QV). Except for PV, they can be freely mapped to all device variables.

The following table shows the possible and default mappings.

Device Variable Number	Device Variable Name	PV	SV	TV	QV
1	Volume flow	D	x	x	x
3	Medium temperature	x	x	x	x
11	Totalizer 1		D	x	x
12	Totalizer 2		x	x	x
13	Totalizer 3		x	x	x
19	Flow velocity	X	x	D	x
49	Electrical conductivity	x	x	x	D

"D" marking denotes default mapping.

B.1.3 Universal commands

The device supports the following universal commands:

Table B-2 Universal commands

Command number	Function
0	Read Unique Identifier
1	Read Primary Variable
2	Read Loop Current And Percent Of Range
3	Read Dynamic Variables And Loop Current
6	Write Polling Address
7	Read Loop Configuration
8	Read Dynamic Variable Classifications
9	Read Device Variables With Status
11	Read Unique Identifier Associated With Tag
12	Read Message
13	Read Tag, Descriptor, Date
14	Read Primary Variable Transducer Information
15	Read Device Information
16	Read Final Assembly Number
17	Write Message
18	Write Tag, Descriptor, Date
19	Write Final Assembly Number

Command number	Function
20	Read Long Tag
21	Read Unique Identifier Associated With Long Tag
22	Write Long Tag
38	Reset Configuration Changed Flag
48	Read Additional Device Status

B.1.4 Common practice commands

The device supports the following common practice commands:

Table B-3 Common practice commands

Command number	Function
33	Read Device Variables
34	Write Primary Variable Damping Value
35	Write Primary Variable Range Values
36	Set Primary Variable Upper Range Value
37	Set Primary Variable Lower Range Value
40	Enter/Exit Fixed Current Mode
42	Perform Device Reset
44	Write Primary Variable Units
45	Trim Loop Current Zero
46	Trim Loop Current Gain
50	Read Dynamic Variable Assignments
51	Write Dynamic Variable Assignments
53	Write Device Variables Units
54	Read Device Variables Information
59	Write Number Of Response Preambles
60	Read Analog Channel And Percent Of Range
63	Read Analog Channel Information
70	Read Analog Channel Endpoint Values
95	Read Device Communications Statistics

B.2 PROFINET

The following sections contain device-specific information.

Further information about the integration of the device on the engineering system is available in the instructions or online help for these tools.

B.2.1 PROFINET communication

PROFINET communication

With the addition of a PROFINET option for the device, communication with a PROFINET I/O controller is possible, and both cyclic and acyclic communication from an I/O controller or I/O supervisor are supported.

This device supports the profile for Process Control Devices (PA profile) V4.

To allow the device to operate on a PROFINET network, a device-specific or a profile-specific GSD file is required.

GSD file must be loaded into the engineering system as part of the system configuration.

The current device-specific GSD file is available to download from the web server of the device or in Siemens Industry Online Support (SIOS): Product documentation and support (Page 125)

Profile-specific GSD files and further information about the PA profile V4 are available on the Internet at PI PROFIBUS-PROFINET (https://www.profibus.com/download/)

B.2.2 Device information

Vendor	Siemens AG
Vendor ID	0x002A
Main family	PA profiles
Product family	Flow
Device ID	0x0B17
Profile-specific device ID	0xB332
PROFINET version	2.43
Profinet functions	• S1 single system integration • S2 system redundancy • Network diagnostics via Simple Network Management Protocol (SNMP)

B.2.3 PROFINET device setup

Ethernet devices always communicate using their unique MAC address. In a PROFINET I/O system each field device receives a device name that uniquely identifies the field device within the I/O system. This name is used for relating the IP address to the MAC address of the field device.

Device name

To enable cyclic communication between the device and the I/O controller, the device requires a device name: the default device name from the factory is left empty.

The device name needs to be entered into the PROFINET I/O controller via a configuration tool such as TIA Portal, Step7 Classic, PRONETA, or third party tool that supports the DCP protocol.

For example, in TIA Portal, the device is added to the project from the device catalog and its device name is assigned by either letting TIA Portal generate the device name from the GSDML file, or by using the device name that you enter in the device name field.

Scanning the network for the device

In TIA Portal, Step7, PRONETA, or third party configuration tool, it is possible to scan the PROFINET network to find available devices. The network scan will identify the device by its MAC address as shown in the example below.

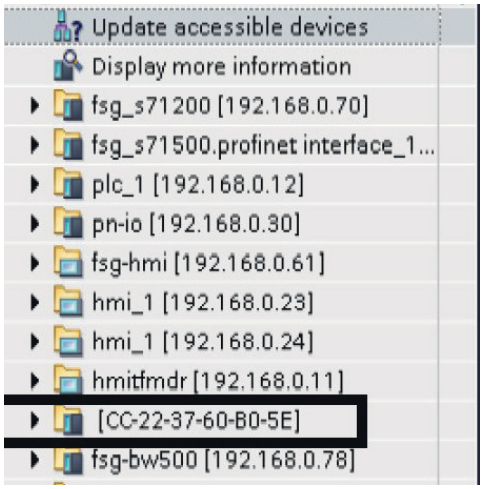

If required, the name can be changed by entering the new name into the properties of the project, in the "PROFINET device name" field.

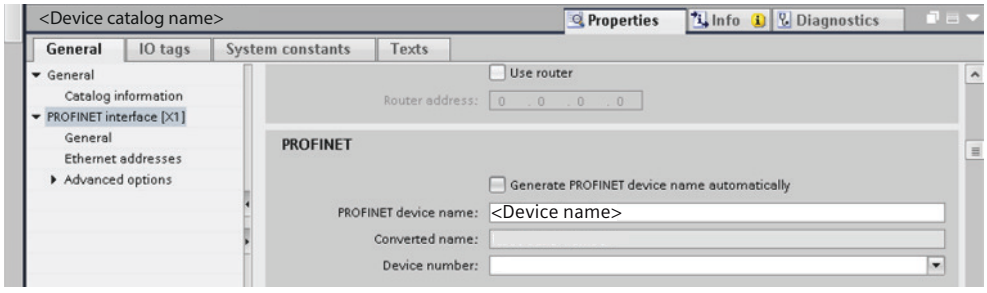

Ensure that the device name matches the device name set in your PROFINET I/O controller or the device will not establish communication with the I/O controller.

Note

Device identification with DCP signal / Flash LED

To ensure correct device identification, use the DCP signal / Flash LED function. Depending on your device, either the LCD display will start blinking, the device display will perform a test run, or an LED will start blinking.

B.2.4 Startup parameters

The device supports startup parameters as defined in the profile for Process Control Devices (PA profile).

The startup parameters can be configured optionally in the engineering system of the automation system. If enabled, the PROFINET controller will transmit the parameter values to the device when the connection starts.

The device supports the startup parameters of the Physical block, the Transducer block, the Analog input (AI) function block and the Totalizer function block:

Module	Parameter
Device settings	Startup settings[1]
	Tag
	Language for the local display
	Diagnostics suppression time [s]
	Configuration flag acknowledge mode[2]
Measurement settings	Flow velocity units
	Flow velocity cut-off limit [%]
	Electrical conductivity units
	Volume flow units
	Volume flow cut-off limit [%]
	Flow direction
Totalized volume	Volume units
	Forward counting
	Continue counting
	Preset[3]
Flow velocity	Damping value [s]
Volume flow	Damping value [s]
Electrical conductivity	Damping value [s]

1 Used to define how the device applies the startup parameters: "Set via external engineering tool", "Only units settings are used", "All settings are used"

2 Defines if the update event is acknowledged manually or automatically. An update event is triggered when, for example, a parameter is changed.

3 Sets the totalizer to a predefined value.

B.2.5 Cyclic communication

B.2.5.1 Cyclic communication

Slot configuration for PROFINET

The table below shows a possible slot configuration of the device. The first slot is preset with "Volume flow". Slots 2, 5 and 6 can be used for totalizer modules. Slot 3 can only be used for "Flow velocity". Slot 4 can only be used for "Electrical conductivity".

Slot #	Slot	Module
1	<Volume flow>	Volume flow
2	<Totalizer 1>	Totalized volume
		Totalized volume (double precision)
		Totalized volume (double precision) with totalizer control
		Totalized volume with totalizer control
3	<Flow velocity>	Flow velocity
4	<Electrical conductivity>	Electrical conductivity
5	<Totalizer 2>	Totalized volume
		Totalized volume (double precision)
		Totalized volume (double precision) with totalizer control
		Totalized volume with totalizer control
6	<Totalizer 3>	Totalized volume
		Totalized volume (double precision)
		Totalized volume (double precision) with totalizer control
		Totalized volume with totalizer control

The totalizer modules include input (totalized value + status byte) and output values. The output byte will configure the totalizer function. The output byte corresponds to the PA-Profile parameter SET_TOT:

- 1 = RESET; assign value "0" to totalizer
- 2 = PRESET; assign value PRESET_TOT to totalizer
- 3 = HOLD; totalization stopped
- 4 = TOTALIZE; normal operation of totalizer

All inputs from the modules provide process values to the PROFINET controller. All modules except totalized volume double precision are formatted in 32-bit floating-point according IEEE754 + status byte. Totalized volume double precision modules are formatted in 64-bit floating-point according IEEE754 + status byte. The status bytes are defined in chapter "Status byte (Page 135)".

B.2.5.2 Status byte

Status byte

For each process value a status byte (also known as quality code) is transmitted. The status byte indicates the status of the value preceding it. The meaning of the status byte data is defined in the Profile for Process Control Devices (PA profile) V4 as stated in the table below. Further information about the PA profile V4 is available on the Internet at PI PROFIBUS-PROFINET (https://www.profibus.com/download/). The status byte is used in both EtherNet/IP and PROFINET device variants.

Status byte coding

Bit								Hex value	Meaning	Priority
7	**6**	**5**	**4**	**3**	**2**	**1**	**0**			
0	0	0	0	0	0	X	X	00	BAD - non-specific	Highest
0	0	1	0	0	1	X	X	24	BAD - maintenance alarm, more diagnostics available	
0	0	1	0	1	0	X	X	28	BAD - process related, no maintenance	
0	1	1	1	1	0	X	X	78	UNCERTAIN – process related, no maintenance	
1	0	1	0	1	0	X	X	A8	GOOD - maintenance demanded	
1	0	1	0	0	1	X	X	A4	GOOD - maintenance required	
1	0	1	1	1	1	X	X	BC	GOOD - function check	
1	0	0	0	0	0	X	X	80	GOOD	Lowest
The following two bits could be additionally set in parallel to the quality codes above:										
X	X	X	X	X	X	1	X	02	Update event flag. Indicates that at least one parameter with attribute static has been modified.	
X	X	X	X	X	X	X	1	01	Simulation active	

B.2.6 Diagnostics

In addition to the status byte, the device provides extensive diagnostics via PROFINET.

The device is designed in accordance with the Profile for Process Control Devices (PA profile) V4, which means that this device supports qualified channel diagnostics.

Transmitter diagnostics

For sensor and transmitter diagnostics, the diagnostic ID shown on the I/O controller or I/O supervisor matches the channel error number minus 1000.

For example, channel error number 1002 shown on the I/O controller refers to diagnostic ID 2 (1002-1000=2).

Refer to the Diagnostics and corrective actions (Page 106) chapter for detailed diagnostic information.

Profile specific

PA profile specific, physical block parameter diagnostics		
PROFINET channel error number	**Diagnosis**	**Description**
37581 (0x92CD)	Maintenance required	Maintenance required
37584 (0x92D0)	Maintenance alarm	Failure of the device
37585 (0x92D1)	Maintenance demanded	Maintenance demanded
37586 (0x92D2)	Function check	Device is in function mode or in simulation or under local control, for example, maintenance
37587 (0x92D3)	Out of specification	The process conditions do not allow returning valid values. (Set if a value has the quality "Uncertain" - Process related, no maintenance, or "Bad" - Process related, no maintenance.)
37588 (0x92D4)	Update event	Shows the status of the update event flag.
36865 (0x9001)	Error in evaluation electronics	1. Restart device, 2. Check if failure recurs, 3. Replace the device.
36883 (0x9013)	Ambient temperature too high	Check that the device is operated within its specifications.

B.2.7 Physical block - Access control_4WTP

The user access level control is managed in the physical block in Slot 3.

To access the user access level control, the user must use acyclic communication to access the physical block.

index	Parameter name	Data type	R/W	Description	
0x0000	CURRENT_ACCESS_ LEVEL	Unsigned8	R	Current access level of the acyclic connection. The access level is handled for each acyclic connection (MSAC1 and each MSAC2) independently.	
				0...1:	Reserved
				2:	Restricted User Privilege (RUP)
				3:	End User Privilege (EUP)
				4:	Service User Privilege (SUP)
				5...255:	Reserved
0x0001	DEFAULT_ACCESS_ LEVEL	Unsigned8	R,W	Initial access level for an acyclic connection defaults to restricted user privilege (option 2).	
				0...1:	Reserved
				2:	Restricted User Privilege (RUP)
				3:	End User Privilege (EUP)
				4...255:	Reserved

index	Parameter name	Data type	R/W	Description
0x0002	LOGIN_END_USER	Unsigned16	R,W	Input of the end user PIN to change the current ACCESS_LEVEL of the acyclic connection. Valid range 0...9999 Reading this parameter indicates if end user privilege is granted (1) or not (0). Note that Service user privilege includes End user privilege.
0X0003	LOGIN_SERVICE_USER	Unsigned16	R,W	Input of the service user PIN to change the current ACCESS_LEVEL of the acyclic connection. Valid range 0...9999 Reading this parameter indicates if service user privilege is granted (1) or not (0).

B.2.8 Address conflict detection (ACD)

The device supports the address conflict detection protocol. If the device detects an IP address conflict, it cannot be accessed via Ethernet and a "Maintenance required" diagnostic according to NAMUR NE107 is shown on the display.

B.3 Modbus

B.3.1 Modbus addressing model

The device allows read/write access to the following standard Modbus RTU data holding register blocks:

- Holding registers (ref. 4x address range)

The minimum value of a writable **holding register** can be read by adding 10000 to the Modbus address of the register.

The maximum value of a writable **holding register** can be read by adding 20000 to the Modbus address of the register.

The default value of a writable **holding register** can be read by adding 30000 to the Modbus address of the register.

B.3.2 Modbus function codes

This device supports following function codes: 3, 8 and 16.

Function codes 3 and 16 are used for accessing registers, max. 16 registers per read/write request is accepted.

Function code 8 is used for reading Modbus communication diagnostic information.

Below the various function code are described.

Function code 3 (Read holding registers)

General exceptions:

- Requesting less than 1 or more than 16 registers => Exception 3 (Illegal data value)
- Requesting invalid start address or start address with invalid quantity => Exception 2 (Illegal data address)

Application exceptions:

- Application errors; min/max limit of parameter exceeded; or parameter write-protected => Exception 4 (Slave device error)

Holes/register alignment:

- The read command always returns data if no exception is given.
- Holes in the holding register map return value zero in all bytes. E.g. reading 2 registers starting at 4:0004 above will result in 2 bytes of "float B" followed by 2 zeroes.

Function code 3 example

Query

Slave address	1 byte
Function	1 byte
Starting Address Hi	1 byte
Starting Address Lo	1 byte
Quantity of Registers Hi	1 byte
Quantity of Registers Lo	1 byte
CRC	2 bytes

Response

Slave address	1 byte
Function	1 byte
Byte count	1 byte
Register Value Hi	1 byte
Register Value Lo	1 byte
:	:
Register Value Hi	1 byte
Register Value Lo	1 byte
CRC	2 bytes

Example: Read absolute volume flow (address 3000)

Query: 1,3,11,184,0,2,70,10

Slave address = 1 (0x01)
Function = 3 (0x03)
Starting Address Hi, Lo = 11, 184 (0x0B,0xB8)

Quantity of Registers Hi , Lo = 0, 2 (0x00,0x02)
CRC = 70,10 (0x46, 0x0A)

Starting address 0x0BB8 = 3000
Quantity of registers = 0x0002 = 2

Response: 1,3,4,64,195,82,139,98,200

Slave address = 1 (0x01)
Function = 3 (0x03)
Byte Count = 4 (0x04)
Register 1 - Register Value Hi, Lo = 64, 195 (0x40, 0xC3)
Register 2 - Register Value Hi, Lo = 82, 139 (0x52, 0x93)
CRC = 98,200 (0x62, 0xC8)

Absolute volume flow = 0x40C35293 = 6.10383 m^3/sec

Function code 16 (Write multiple registers)

General exceptions

- Writing less than 1 or more than 16 registers => Exception 3 (Illegal data value)
- If ByteCount is not exactly 2 times NoOfRegisters => Exception 3 (Illegal data value)
- Requesting invalid start address or start address with invalid quantity => Exception 2 (Illegal data address)

Application exceptions:

- Application errors; min/max limit of parameter exceeded; or parameter write-protected => Exception 4 (Slave device error)
- Application errors include writing to ReadOnly holding registers

Holes/register alignment:

- If start-address is not the start of a mapped holding register => Exception 2 (Illegal data address)
- Writing to holes is allowed (ie ignored - and no exception occurs) - except for the condition described above
- If the end address is only part of a mapped holding register item (e.g. one half of a float value), the action depends on the data type. Writing parts of all data types => Exception 4 (Slave device error)

Function code 16 example

Query

Slave address	1 byte
Function	1 byte
Starting Address Hi	1 byte
Starting Address Lo	1 byte
Quantity of Registers Hi	1 byte

Quantity of Registers Lo	1 byte
Byte Count	1 byte
Registers Value Hi	1 byte
Registers Value Lo	1 byte
:	:
Registers Value Hi	1 byte
Registers Value Lo	1 byte
CRC	2 bytes

Response

Slave address	1 byte
Function	1 byte
Starting Address Hi	1 byte
Starting Address Lo	1 byte
Quantity of Registers Hi	1 byte
Quantity of Registers Lo	1 byte
CRC	2 bytes

Example: Set baud rate to 115200 baud (address 8298)

Query: 1,16,2,17,0,1,2,0,5,70,210

Slave address = 1 (0x01)
Function = 16 (0x10)
Starting Address Hi, Lo = 2, 17 (0x02,0x11)
Quantity of Registers Hi, Lo = 0, 1 (0x00,0x01)
Byte Count = 2 (0x02)
Registers Value Hi, Lo = 0, 5 (0x00,0x05)
CRC = 70,10 (0x46, 0x0A)

Starting address 0x0211 = 529
Number of registers = 0x0001 = 1
Data 0x0005 = (115200 = value 5)

Response: 1,16,2,17,0,1,80,116

Slave address = 1 (0x01)
Function = 16 (0x10)
Starting Address Hi, Lo = 2, 17 (0x02,0x11)
Quantity of Registers Hi, Lo = 0, 1 (0x00,0x01)
CRC = 80,116 (0x50, 0x74)

Function code 8 (Diagnostics)

Modbus function code 8 provides a series of tests for checking the communication system between a client (Master) device and a server (Slave).

The following diagnostics functions are supported:

Sub-function code (Dec)	Name	Description
00	Return Query Data	The data passed in the request data field is to be returned (looped back) in the response.
10	Clear Counters and Diagnostic Register	Clears all counters and the diagnostic register. Counters are also cleared upon power–up.
11	Return Bus Message Count	The response data field returns the quantity of messages that the remote device has detected on the communications system since its last restart, clear counters execution, or power–up.
12	Return Bus Communication Error Count	The response data field returns the quantity of CRC errors encountered by the remote device since its last restart, clear counters execution, or power–up.
13	Return Bus Exception Error Count	The response data field returns the quantity of MODBUS exception responses returned by the remote device since its last restart, clear counters execution, or power–up.
14	Return Slave Message Count	The response data field returns the quantity of messages broadcast or addressed to the remote device that the remote device has processed since its last restart, clear counters execution, or power–up.
15	Return Slave No Response Count	The response data field returns the quantity of messages addressed to the remote device for which it has returned no response (neither a normal response nor an exception response), since its last restart, clear counters execution, or power–up.
16	Return Slave NAK Count	The response data field returns the quantity of messages addressed to the remote device for which it returned a Negative Acknowledge (NAK) exception response, since its last restart, clear counters execution, or power–up.
17	Return Slave Busy Count	The response data field returns the quantity of messages addressed to the remote device for which it returned a Slave Device Busy exception response, since its last restart, clear counters execution, or power–up.
18	Return Bus Character Overrun Count	The response data field returns the quantity of messages addressed to the remote device that it could not handle due to a character overrun condition, since its last restart, clear counters execution, or power–up.
20	Clear Overrun Counter and Flag	Clears the overrun error counter and resets the error flag.

Function code 8 example

Query

Slave address	1 byte
Function	1 byte
Sub-function Hi	1 byte

Sub-function Lo	1 byte
Data Hi	1 byte
Data Lo	1 byte
:	:
Data Hi	1 byte
Data Lo	1 byte
CRC	2 bytes

Response

Slave address	1 byte
Function	1 byte
Sub-function Hi	1 byte
Sub-function Lo	1 byte
Data Hi	1 byte
Data Lo	1 byte
:	:
Data Hi	1 byte
Data Lo	1 byte
CRC	2 bytes

B.3.3 Changing Modbus communication settings

Changing communication parameters, for example **Baud Rate**, **Modbus Parity Framing** or **Bus Address** effects the Modbus communication as follows:

- The new settings have effect only after a reset, either by restarting the device or writing the value 1 to Modbus address 8291 **Restart communication**.
- The new settings will not have effect until the Modbus driver has responded to any ongoing Modbus request.

NOTICE
Setting addresses in a multidrop network It is recommended NOT to use the default address in a multi-drop network. When setting device addresses, make sure that each device has a unique address. Replication of addresses may cause abnormal behavior of the entire serial bus and make the master unable to communicate with all slaves on the bus.

B.3.4 Modbus communication

Table B-4 General Modbus settings

Modbus register	Data type / Size in bytes	Parameter	Description	Default value [units] (units register)	Value range / Setting options	Access level
8291	Unsigned / 2	Restart communication	Restarts the communication using configured slave address, baud rate and parity/framing.	-	• 0: Cancel • 1: Restart	Write only
8297	Unsigned / 2	Slave address (SW)	Software address of Modbus interface.	1	1 - 147	Read / write
8298	Unsigned / 2	Baud rate	Baud rate of Modbus interface.	19200 Bit/s	• 0: 9600 Bit/s • 1: 19200 Bit/s • 2: 115200 Bit/s • 3: Reserved • 4: 38400 Bit/s • 5: 57600 Bit/s • 6: 76800 Bit/s • 7: 1200 Bit/s • 8: 2400 Bit/s • 9: 4800 Bit/s	Read / write
8299	Unsigned / 2	Parity and framing	Parity and framing of the Modbus communication interface.	Even parity, 1 stop	• 0: Even parity, 1 stop • 1: Odd parity, 1 stop • 2: No parity, 2 stops • 3: No parity, 1 stop	Read / write

B.3.5 Process data

Table B-5 Process data

Modbus register	Data type / Size in bytes	Parameter	Description	Default value [units] (units register)	Value range / Setting options	Access level
3000	Float / 4	Volume flow	Calculated volume flow	m^3/h (cubic meters per hour)	Custom	Read only
3004	Float / 4	Flow velocity	Calculated flow velocity	m/s (meters per second)	Custom	Read only
3006	Float / 4	Electrical conductivity	Calculated medium electrical conductivity	S/m (siemens per meter)	Custom	Read only
8300	Float / 4	Totalizer 1	Totalized value 1 (default setting: forward counting)	l (liters)	Custom	Expert
8400	Float / 4	Totalizer 2	Totalized value 2 (default setting: backward counting)	l (liters)	Custom	Expert
8500	Float / 4	Totalizer 3	Totalized value 2 (default setting: net counting)	l (liters)	Custom	Expert

B.3.6 Coil configuration

The device provides 20 coil definitions which can be configured.

Table B-6 Coil configuration

Modbus register	Data type / Size in bytes	Parameter	Description	Default value [units] [1] (units register)	Value range / Setting options	Access level
10300	Unsigned / 2	Modbus coil address 1	Specifies the coil address with which the following bit coded register value is accessible. The register and bit(s) are specified by Modbus coil register 1and Modbus coil bitmask 1	1	0 - 65535	Read / write
10301	Unsigned / 2	Modbus coil register 1	Specifies the Modbus register whose value is checked against Modbus coil bitmask 1 to determine the coil value (false or true). A register value of 65535 specifies that this coil mapping is undefined.	Undefined	0 - 65535	Read / write

Modbus register	Data type / Size in bytes	Parameter	Description	Default value [units] [1] (units register)	Value range / Setting options	Access level
10302	Unsigned / 4	Modbus coil bitmask 1	Bit mask which is compared against the register value specified with Modbus coil register 1 to determine the coil value. If any bit of the register value is set which is also set in the bit mask then the coil value is true, otherwise the coil is false.	0	0 - 4294967295	Read / write
10304	Unsigned / 2	Modbus coil length 1	Output parameter that informs about the size in bytes of the parameter that is specified by Modbus coil address 1. Could be used to identify the relevant bits of the Modbus coil bitmask 1	-		Read only
10305	Unsigned / 2	Modbus coil address 2	Specifies the coil address with which the following bit coded register value is accessible. The register and bit(s) are specified by Modbus coil register 2 and Modbus coil bitmask 2	2	0 - 65535	Read / write
10306	Unsigned / 2	Modbus coil register 2	Specifies the Modbus register whose value is checked against Modbus coil bitmask 2 to determine the coil value (false or true). A register value of 65535 specifies that this coil mapping is undefined.	Undefined		Read / write
10307	Unsigned / 4	Modbus coil bitmask 2	Bit mask which is compared against the register value specified with Modbus coil register 2 to determine the coil value. If any bit of the register value is set which is also set in the bit mask then the coil value is true otherwise false.	0	0 - 4294967295	Read / write
10309	Unsigned / 2	Modbus coil length 2	Output parameter that informs about size in bytes of parameter that is specified by Modbus coil address 2. Could be used to identify the relevant bits of the Modbus coil bitmask 2	-		Read only

Modbus register	Data type / Size in bytes	Parameter	Description	Default value [units] [1] (units register)	Value range / Setting options	Access level
...						
10399	Unsigned / 2	Modbus coil length 20	Output parameter that informs about the size in bytes of the parameter that is specified by Modbus coil address 20. Could be used to identify the relevant bits of the Modbus coil bitmask 20	-		Read only

[1] If default value is "-" the command "Set to default" will not set this parameter to default.

B.3.7 Modbus register mapping

The device provides the possibility to map each existing parameter to a freely chosen Modbus register for communication purposes over channel 1.

The device provides means to remap 20 Modbus registers.

Table B-7 Modbus register mapping

Modbus register	Data type / Size in bytes	Parameter	Description	Default value [units] (units register)	Value range / Setting options	Access level
10448	Unsigned / 4	Enable mapping	Activation/deactivation of the register mapping. A set bit means that the mapping pair is activated, a cleared bit that the mapping pair is deactivated. Bit 0: Requested register 1 / Target register 1 ... Bit 19: Requested register 20 / Target register 20	0	0 - 1048575	Read / write
10450	Unsigned / 2	Register 1 source	Modbus register that appears within Modbus request is redirected to the parameter specified by Target register 1	65535	0 - 65535	Read / write
10451	Unsigned / 2	Register 1 target	Register of an existing product parameter to which a Modbus request is redirected	65535	0 - 65535	Read / write
...						

Modbus register	Data type / Size in bytes	Parameter	Description	Default value [units] (units register)	Value range / Setting options	Access level
10488	Unsigned / 2	Register 20 source	Modbus register that appears within Modbus request is redirected to the parameter specified by Target register 20	65535	0 - 65535	Read / write
10489	Unsigned / 2	Register 20 target	Register of an existing product parameter to which a Modbus request is redirected	65535	0 - 65535	Read / write

B.3.8 Integer byte order

The device is able to adjust the byte order of integer values.

Table B-8 Integer byte order

Modbus register	Data type / Size in bytes	Parameter	Description	Default value [units] (units register)	Value range / Setting options	Access level
8295	Unsigned / 2	Integer order byte	The integer byte order used in Modbus messages. 0: MSB - LSB (big endian) 1: LSB - MSB (little endian) MSB = most significant byte / high byte LSB = least significant byte / low byte	MSB - LSB (big endian)	0 - 1	Read / write

B.3.9 Float byte order

The device is able to adjust the byte order of floating-point values.

Table B-9 Float byte order

Modbus register	Data type / Size in bytes	Parameter	Description	Default value [units] (units register)	Value range / Setting options	Access level
8296	Unsigned / 2	Float byte order	The float byte order used in Modbus messages. 0: 1-0-3-2 1: 0-1-2-3 2: 2-3-0-1 3: 3-2-1-0 The first mentioned byte is the first byte sent. Byte 3 corresponds to the left-most byte (MSB) of a 32 bit floating point number in big endian format, byte 0 to the right-most byte	3-2-1-0	0 - 3	Read / write

B.3.10 Modbus function codes

Table B-10 General Modbus settings

Function code	Command text	Description
01	Read Coils	Reads the status of single bit(s)
02	Read Discrete Inputs	Reads the status of single input bit(s)
03	Read Holding Registers	Reads the binary content of multiple 16-bit registers
04	Read Input Registers	Reads the binary content of multiple 16-bit registers
05	Write Single Coil	Writes a single on/off bit
06	Write Single Register	Writes the binary content of single 16-bit register
07	Read Exception Status	Delivers the global alarm status of the device
08	Diagnostics	Provides a series of tests for checking the communication system
15	Write Multiple Coils	Writes multiple on/off bits
16	Write Multiple Registers	Writes the binary content of multiple 16-bit registers
17	Report Slave ID	The device will respond to a Report Slave ID command (command 17) request from the master by giving information about device type, vendor, and revision level
23	Read/Write Multiple Registers	Combined Write Multiple Registers / Read Holding Registers call

Function code 7 (Read exception status)

The device provides the content of the parameter Global alarm status as exceptions.

Function code 8 (Diagnostics)

The diagnostics function provides means for checking the communication between MODBUS master and slave. The function uses a sub-function code to select the functionality.

The following sub-function codes are supported:

Sub-function code	Name	Description
0	Return query data	The data passed in the request data field will be returned (looped back) in the response. The entire response message should be identical to the request.
1	Restart communications option	After having restarted the communication, select the baudrate, framing or Modbus address to get access to the device again.

Function code 17 (Report Slave ID)

The transmitter will respond to a Report Slave ID request from the master by giving information about device type, vendor, and firmware version in a format as shown:

Response

Slave address	1 byte	
Function code	1 byte	17
Byte count	1 byte	62
Slave ID	1 byte	Sensor device type 5: SITRANS FM
Run indicator	1 byte	255: Running
Manufacturer name	12 bytes	SIEMENS
Product name	32 bytes	SITRANS F
Product firmware version	16 bytes	-
CRC	2 bytes	

B.3.11 Access control

Access control manages whether the Modbus master is allowed to modify device parameters. Reading of parameters is always possible. The general access control rules are:

- The Modbus interface has an access level that can be changed by providing PIN information via the Modbus register 8292 (User PIN) or 8293 (Expert PIN).
- The default fieldbus access level can be set using Modbus register 6348, with the following possible values:
  - 32: End User Privilege
  - 16: Restricted User Privilege
- Each parameter has a protection level assigned that specifies the required access level to modify the parameter via the Modbus interface.
- If the access level of the Modbus interface is lower than the protection level of the parameter that is desired to be modified, then the attempt to modify the parameter is rejected by the device.

If the device is defined as a custody transfer (CT) device and the CT write protection DIP switch is ON (locked), the device will deny all writes to CT parameters independent of the access control.

Table B-11 Access control

Access level	Description
Read only	The Modbus master is not able to modify the device configuration (setup parameters). The Modbus master is only able to execute the command, to reset PINs. This is the default level of the Modbus interface.
User	The Modbus master has to provide the correct user PIN with Modbus register 8292 to reach this access level. The Modbus master is able to modify a subset of the device configuration.
Expert	The Modbus master has to provide the correct expert PIN with Modbus register 8293 to reach this access level. The Modbus master is able to modify the configuration of the device.

If an incorrect user PIN or an incorrect expert PIN is entered, or if the device does not receive any request within 10 minutes, the device resets the access level to read only.

B.4 EtherNet/IP

EtherNet/IP communication

The device supports the EtherNet/IP adapter functionality to connect with an EtherNet/IP scanner (I/O controller). Through implicit communication it is possible to transfer process data between an I/O controller and the field device.

To allow the device to operate on an EtherNet/IP network, a device-specific EDS file is required.

The EDS file is available via embedded EDS support (File object 0x37). The engineering system can read the file directly from the device. Alternatively, the EDS file can be downloaded from the web server of the device or from Siemens Industry Online Support (SIOS): Software downloads (https://www.siemens.com/processinstrumentation/downloads)

Note

Device integration into automation system

Verify with your engineering system documentation, on how to integrate the device using the provided EDS file.

Device information

Vendor	Siemens AG
Vendor ID	0x04E3
Product code	FMT020: 3001
Device profile	Generic Device (0x2B)

B.4.1 Startup parameters

The device supports startup parameters for quick commissioning.

The startup parameters can be configured optionally in the engineering system of the automation system. If enabled, the EtherNet/IP controller will transmit the parameter values to the device when the connection starts.

The device supports the following startup parameters:

- Startup settings[1]
- Tag
- Language for the local display
- Diagnostics suppression time [s]
- Volume flow units
- Volume flow cut-off limit
- Flow direction
- Flow velocity units
- Electrical conductivity units
- Mains frequency
- Volume flow - Damping value [s]
- Totalizer 1 - Volume units
- Totalizer 1 - Direction
- Totalizer 1 - Fail-safe behavior
- Totalizer 1 - Preset value[2]
- Totalizer 2 - Volume units
- Totalizer 2 - Direction
- Totalizer 2 - Fail-safe behavior
- Totalizer 2 - Preset value[2]
- Totalizer 3 - Volume units
- Totalizer 3 - Direction
- Totalizer 3 - Fail-safe behavior
- Totalizer 3 - Preset value[2]
- Flow velocity - Damping value [s]
- Electrical conductivity - Damping value [s]

[1] Used to define how the device applies the startup parameters: "Set via external engineering tool", "Only units settings are used", "Only units and device tag are applied" , "All settings are used".

[2] Sets the totalizer to a predefined value.

B.4.2 Data for cyclic communication/implicit messaging

B.4.2.1 Input assembly

The device input assembly includes the following parameters:

- Volume flow + Status byte
- Totalizer 1 + Status byte
- Totalizer 2 + Status byte
- Totalizer 3 + Status byte
- Flow velocity + Status byte
- Electrical conductivity + Status byte
- Device status

Status byte

For each process value a status byte (also known as quality code) is transmitted. The status byte indicates the status of the value preceding it. The meaning of the status byte data is defined in the Profile for Process Control Devices (PA profile) V4 as stated in the table below. Further information about the PA profile V4 is available on the Internet at PI PROFIBUS-PROFINET (https://www.profibus.com/download/). The status byte is used in both EtherNet/IP and PROFINET device variants.

Status byte coding

Bit								Hex value	Meaning	Priority
7	**6**	**5**	**4**	**3**	**2**	**1**	**0**			
0	0	0	0	0	0	X	X	00	BAD - non-specific	Highest
0	0	1	0	0	1	X	X	24	BAD - maintenance alarm, more diagnostics available	
0	0	1	0	1	0	X	X	28	BAD - process related, no maintenance	
0	1	1	1	1	0	X	X	78	UNCERTAIN – process related, no maintenance	
1	0	1	0	1	0	X	X	A8	GOOD - maintenance demanded	
1	0	1	0	0	1	X	X	A4	GOOD - maintenance required	
1	0	1	1	1	1	X	X	BC	GOOD - function check	
1	0	0	0	0	0	X	X	80	GOOD	Lowest
The following two bits could be additionally set in parallel to the quality codes above:										
X	X	X	X	X	X	1	X	02	Update event flag. Indicates that at least one parameter with attribute static has been modified.	
X	X	X	X	X	X	X	1	01	Simulation active	

Device status

The device is compliant to NAMUR NE107. The parameter "Device status" follows the coding below:

Device status	Symbol	Priority	Device status parameter
Failure		highest	Bit 1
Function check			Bit 3
Out of specification			Bit 0
Maintenance required			Bit 2
Good		lowest	Bit 0 ... 3 are reset

B.4.2.2 Output assembly

The device output assembly includes the following parameters:

- Totalizer 1 control
- Totalizer 2 control
- Totalizer 3 control

Each output byte will configure the respective totalizer function. The output byte is coded as follows:

- 1 = RESET; assign value “0” to totalizer
- 2 = PRESET; assign value PRESET_TOT to totalizer
- 3 = HOLD; totalization stopped
- 4 = TOTALIZE; normal operation of totalizer

B.4.3 Address conflict detection (ACD)

The device supports the address conflict detection protocol. If the device detects an IP address conflict, it cannot be accessed via Ethernet and a "Maintenance required" diagnostic according to NAMUR NE107 is shown on the display.

Remote operation

C

C.1 SIMATIC PDM

C.1.1 Overview SIMATIC PDM

SIMATIC PDM (Process Device Manager) is a general-purpose, manufacturer-independent tool for the configuration, parameter assignment, commissioning, diagnostics and maintenance of intelligent field devices and field components. Follow-up installations and additional information on SIMATIC PDM are available on the Internet at SIMATIC PDM (https://www.siemens.com/simatic-pdm).

SIMATIC PDM monitors the process values, alarms and status signals of the device. It allows you to display, compare, adjust, verify, and simulate process device data; also to set schedules for calibration and maintenance.

For information on, for example, how to install and integrate devices, commission the software, see Operating Manual 'Help for SIMATIC PDM'. The manual is delivered with SIMATIC PDM software. Once the SIMATIC PDM is installed on your computer you find the manual under: Start > All programs > Siemens Automation > SIMATIC > Documentation. Link at our website: SIMATIC PDM instructions and manuals (https://support.industry.siemens.com/cs/ww/en/ps/16983/man).

Note

Field device parameters

- For a list of parameters and additional information, consult section "Parameter assignment (Page 79)".
- The field device remains in measurement mode during the time you configure the field device.

C.1.2 Check SIMATIC PDM version

Procedure

1. Go to SIMATIC PDM Download (http://www.siemens.com/simaticpdm/downloads).
2. Check the support page to make sure you have:
   - The latest version of SIMATIC PDM
   - The most recent Service Pack (SP)
   - The most recent hot fix (HF)

C.1.3 Deactivate buffers when connecting via serial modem

Introduction

This deactivation is required to align SIMATIC PDM with the HART modem when using a Microsoft Windows operating systems.

Deactivating buffers is not necessary when connecting via USB.

Condition

- You connect via RS232 (COM1).
- You have administrative rights on your operating system.
- You know the hardware and software requirements SIMATIC PDM installation documentation.

Procedure

1. Check the Operating Instructions for SIMATIC PDM for hardware and software requirements.
2. From the computer desktop, click "Start > Control Panel" to begin configuration.
3. Click "System and Security".
4. Select "Device Manager" under "System".
5. Open folder "Ports".
6. Double click the COM Port used by the system to open the properties window.
7. Select the tab "Port Settings".
8. Click the "Advanced" button.
   If the "Use FIFO buffers" radio box is selected, click to deselect.

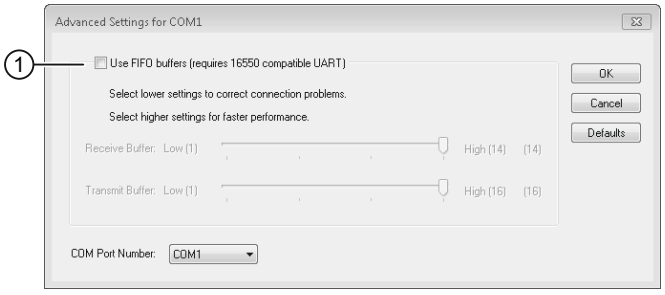

① Deselect "Use FIFO buffers" radio box

9. Click "OK" button to close out.
10. Close all screens.
11. Restart the computer.

C.1.4 Updating the Electronic Device Description (EDD) or Field Device Integration (FDI)

Procedure

1. Check that the EDD or FDI revision match the Firmware revision in the device according to the table in section Product compatibility (Page 11).
2. Go to the support page Software downloads (https://www.siemens.com/processinstrumentation/downloads).
3. Enter the product name in the field "Enter search term...".
4. Download the most current EDD or FDI of your device.
5. Save files to your computer in an easily accessed location.
6. Launch SIMATIC PDM – Device Integration Manager.
   From the File menu, click "Read device descriptions from compressed source...".
7. Browse to the compressed EDD or FDI files, select and open it.
8. From the Catalog menu, use the "Integration" function to integrate the EDD or FDI into the device catalog. The EDD or FDI is now accessible via SIMATIC Manager.

HMI menu structure

D

D.1 HMI menu structure

An overview of the HMI menu structure is available for download under this link (https://support.industry.siemens.com/cs/document/109826074).

Index

A

Access control, 150

C

Catalog
  catalog sheets, 125
Certificates, 16, 125
Cleaning, 95
Coil configuration, 144
Commissioning
  via HMI, 62
  Wizard, 62
Current output, 121
Customer Support, (Refer to Technical support)

D

Diagnostics
  Sensor, 106
  Transmitter, 108
Disassembly, 25
Disposal, 102
Document history, 11
Downloads, 125

E

Environmental & safety conditions, 122

F

Float byte order, 148

G

General Modbus settings, 143, 148

H

HART
  Common practice commands, 130
HART communication
  details, 127
HART module, 127
Hazardous area
  Laws and directives, 16
Hotline, (Refer to Support request)

I

Icons, (see Symbol)
Installation
  Indoor/outdoor, 25
Integer byte order, 147

L

Laws and directives
  Disassembly, 16
  Personel, 16
Low flow cut-off, 82

M

Maintenance, 95
  device status symbols, 103, 105
Manuals, 125
Modbus holding registers
  Access control, 150
  Coil configuration, 144
  Float byte order, 148
  General Modbus settings, 143, 148
  Integer byte order, 147
  Modbus register mapping, 146
  Process data, 144
Modbus register mapping, 146
Modifications
  correct usage, 17
  improper, 17

O

Order number
  on the nameplate, 21

P

Parameter view, 73, 74
Power supply, 120
Process data, 144

Product name, 21

R

Rated operating conditions, 121
Return procedure, 102

S

Scope of delivery, 12
Sensor diagnostics, 106
Service, 126
Service and support
    Internet, 126
Support, 126
Support request, 126
Symbol, 105
    configuration, 103
    device status, 103, 105
    diagnostics, 103, 105
    maintenance, 103, 105
    operating mode, 103
    process value, 103
Symbols, (Refer to warning symbols)

T

Technical data
    Current output, 121
    Power supply, 120
Technical support, 126
    partner, 126
    personal contact, 126
Test certificates, 16
Transmitter diagnostics, 108

V

Views
    parameter, 73

W

Warning symbols, 16
Warranty, 14